Masttech 61

Thermally insulated profile system

Technical catalogue

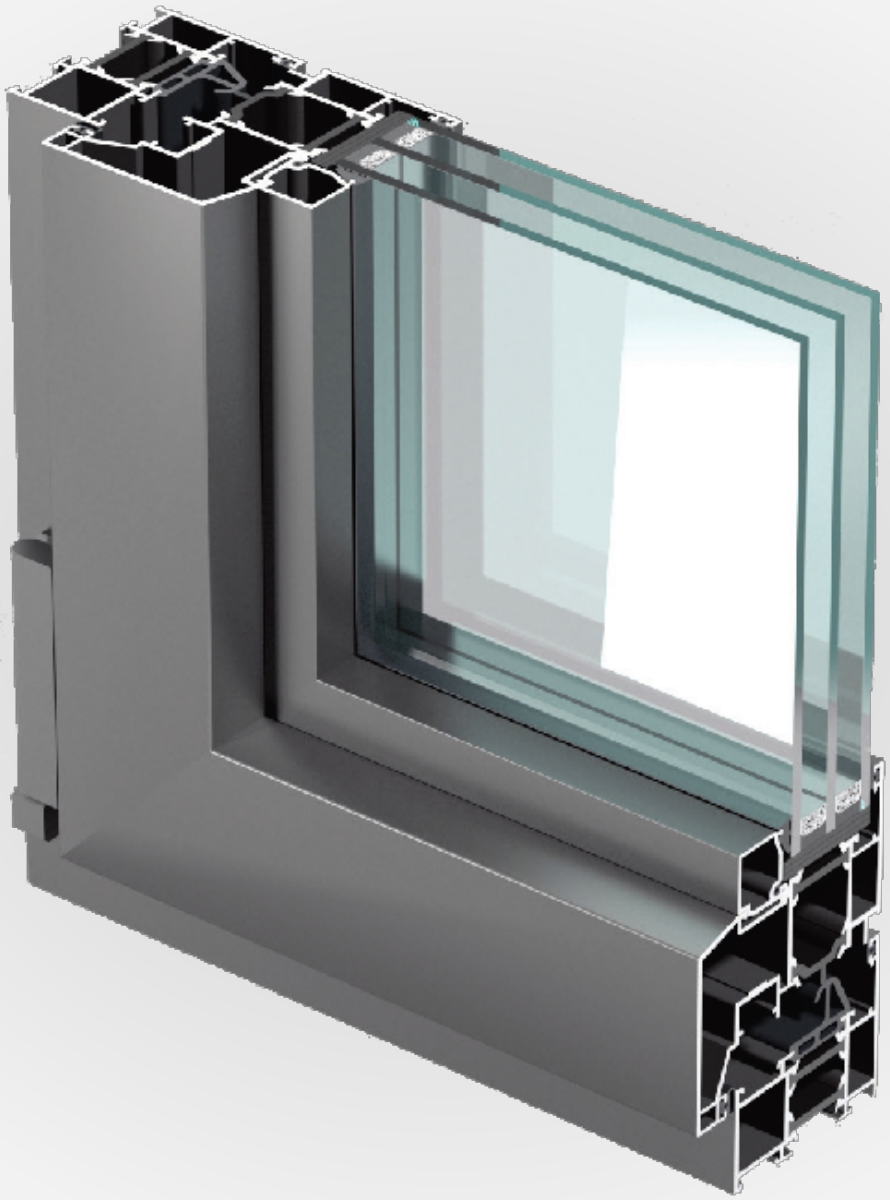

Masttech

Алюминиевые системы нового поколения

Masttech 61

“Warm” stained-glass profile system (with thermal break)

Technical catalogue

February 2023

contents
profiles
delivery set
profiles (1:1)
sections
glazing tables
sub-assemblies tables
fitting arrangements
additional solutions
sub-assemblies
fire-resistant structures
connections
equipment and tools

The MastTech-61 stained-glass glazing system is designed for manufacture of "warm" glazing: doors, conventional and stained glass windows. The MastTech-61 aluminium profile system can be used to create translucent enclosures for installation in wall openings and stained glass structures.

The MastTech-61 stained-glass glazing system was developed based on our long-term experience in development and application of profile systems. All profiles and subassemblies are specifically designed to simplify the assembly and installation operations and minimise costs.

The system is based on quenched and artificially aged (T1) AD31 alloy aluminium profiles, which comply with modern building regulations and the requirements for stained glass structures in new construction.

The system profiles can be powder-coated in accordance with GOST 9.410-88. The coating colour is assigned by the customer according to the RAL chart.

The MastTech-61 system also includes gaskets, fittings and tooling for profile machining.

Gaskets are manufactured from thermoplastic elastomers (TPE) or ethylene-propylene-diene monomer (EPDM) as per GOST 30778-2001. The gaskets remain functional at temperatures from –40 °C to +40 °C. The minimum service life is 10 years.

The components of the system are used in the frame and sash assemblies. The materials used to manufacture the fittings comply with the applicable standards. Hinges and locking mechanisms from leading European window fitting manufacturers can be used due to the euro grooves for fittings provided in the profiles.

Glass in stained-glass windows and permanent sashes is padded and secured with glazing beads and gaskets. MastTech-61 system provides for a frame filling of up to 46 mm in thickness and a sash filling of up to 50 mm in thickness.

The corner gaskets are cut at a 45° angle and bonded together using cyanoacrylate-based adhesive.

The cut profile lengths given in the catalogue are accurate, except for the values marked with footnotes. In some cases, they shall be rounded according to the accuracy and specifications of the workshop equipment. For this reason, it is advisable to produce test pieces during the process assimilation phase or in the case of large cutting volumes, in order to check the dimensions.

The manufacturer reserves the right to make modifications to the profile system in order to improve the operational, economic or technological performance of the system.

Material	AD31 alloy (T1)
Air permeability, $m^3/m^2 \cdot h$	0.05 (at 100 Pa)
Water permeability	not permeable at 600 Pa
Reduced thermal resistance of the structure $m^2 \cdot °C/W$	up to 0.75
Resistance to wind load, Pa	1500 (class A)
Gasket material	EPDM/TPE
Fitting groove	euro groove, 15 x 20 mm
Filling thickness, mm	up to 46 mm (frame)/up 50 mm (sash)
Frame to sash clearance, mm	5
Flange for filling members, mm	18

contents
profiles
delivery set
profiles (1:1)
sections
glazing tables
sub-assemblies tables
fitting arrangements
additional solutions
sub-assemblies
fire-resistant structures
connections
equipment and tools

P00-001
pull rod

P00-002
sash-mounted
drip cap

P00-003-2
handrail
30 x 50

P00-004
strip
100 x 5

P00-009
rectangular
pipe
20 x 13 mm

P00-015
strip
80 x 5

P00-016
strip
50 x 5

P00-019
channel
10 x 10 x 1

P00-020
rectangular
pipe
70 x 30 x 1.2

P00-023
ventilation
grill lamella
30 mm

P00-029-2
batten
holder

P00-030
rabbet
ledge
profile

P00-032
pipe holder
55 mm

P00-033
circular
pipe
55 x 2 mm

P00-031
felt holder

P00-034
angle piece
30 x 15 x 1.5

P00-035
batten holder
30 mm flat

P00-037-611
internal angle
swivel

* — delivery period 8–10 weeks

P00-037-612
external angle
swivel

* — delivery period 8–10 weeks

P00-041
rectangular
pipe
50 x 30 x 3

P00-044
batten
holder
18 mm

P00-062
cap

P00-078
angle piece
25 x 25 x 1.5

P00-079-01
screen cover

P00-079-11
outermost
screen
housing

P00-079-12
central
screen
housing

P00-079-13
outermost
screen
housing
offset 80 mm

P00-079-14
central
screen
housing
offset 80 mm

P00-080
angle piece
15 x 15 x 1.5

P00-081
angle piece
50 x 50 x 2

P00-082-01

* — delivery period 8–10 weeks

contents
profiles
delivery set
profiles (1:1)
sections
glazing tables
sub-assemblies tables
fitting arrangements
additional solutions
sub-assemblies
fire-resistant structures
connections
equipment and tools

contents
profiles
delivery set
profiles (1:1)
sections
glazing tables
sub-assemblies tables
fitting arrangements
additional solutions
sub-assemblies
fire-resistant structures
connections
equipment and tools

P00-082-02

*** — delivery period 8–10 weeks**

P00-094
holder


P00-095-2
frame
retainer
in façade

*** — delivery period 8–10 weeks**

P00-100-40
internal
window sill
40 mm
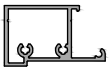

P00-501-25
glazing bead
3.5 mm
harness
sealing


P00-502
glazing bead
6.5 mm


P00-502-2
glazing bead
6.5 mm
harness
sealing


P00-502-25
glazing bead
5.5 mm
closed profile


P00-503
glazing bead
12.5 mm


P00-503-2
glazing bead
12.5 mm
closed profile


P00-503-25
glazing bead
15.5 mm
closed profile


P00-504
glazing bead
18.5 mm


P00-504-2
glazing bead
18.5 mm
closed profile


P00-504-25
glazing bead
21.5 mm
closed profile


P00-506
glazing bead
24.5 mm


P00-506-2
glazing bead
24.5 mm
closed profile


P00-506-25
glazing bead
27.5 mm
closed profile


P00-506-3
groove
glazing bead
24.5 mm


P00-507
glazing bead
30.5 mm


P00-507-2
glazing bead
30.5 mm
closed profile


P00-510
glazing bead
51.5 mm
closed profile
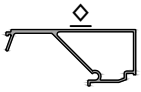
*** — delivery period 8–10 weeks**

P00-530
external
glazing bead
cover


P00-612
impost block
external
for warm
systems


P00-612-3
impost block
external
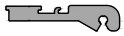

P00-613
medium
block
for warm
systems


P00-615
mullion block
25 mm


P00-617
corner block
26.5 mm
for squeezing
and fixing
by pin 5
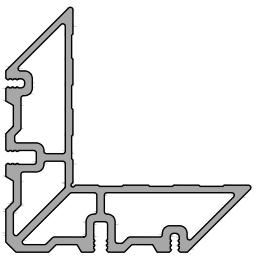

P00-619
corner block
19.7 mm
for squeezing
and fixing
by pin 5
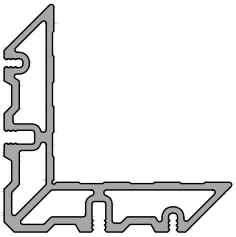

P00-620
corner block
5.2 mm
for squeezing
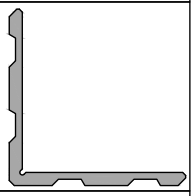

P00-632
corner block
33 mm
for squeezing
and fixing
by pin 5
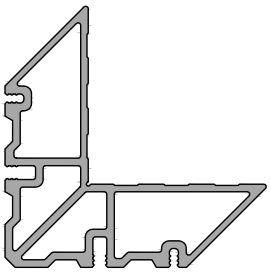

contents
profiles
delivery set
profiles (1:1)
sections
glazing tables
sub-assemblies tables
fitting arrangements
additional solutions
sub-assemblies
fire-resistant structures
connections
equipment and tools

P05-04-0340
strip
40 x 3

P24-012
visor for
narrow
frame

P30-001
lamella
50 x 28

P30-002
lamella
65 x 25

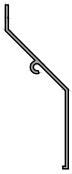

P30-101
grill
frame

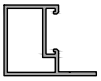

P30-102
paneless
frame

P30-301
corner
mullion

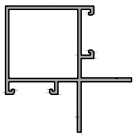

P30-401
grill
transom

P30-601
grill
block

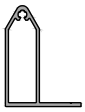

P40-002
base
mullion
adapter

P61-002-2
corner
frame
adapter

* — delivery period 8–10 weeks

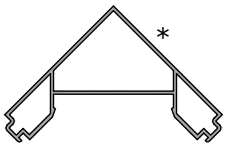

P61-003
swivel adapter

* — delivery period 8–10 weeks

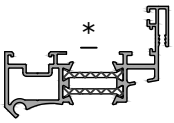

P61-004
angled mullion
adapter 45°

* — delivery period 8–10 weeks

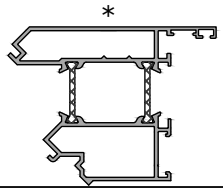

P71-014
door
sill
20 mm

P71-014-2
door
sill
40 mm

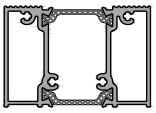

P61-015-2
corner
stained-glass
adapter

* — delivery period 8–10 weeks

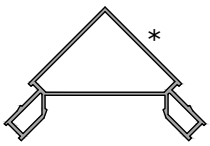

P61-025
Base rabbet
ledge

* — delivery period 8–10 weeks

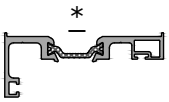

P61-101
window frame

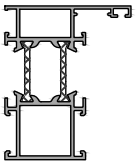

P61-102
façade
window
frame

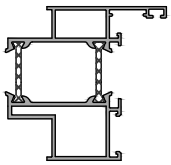

P61-103
medium
window
frame

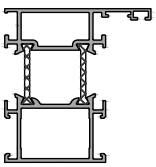

P61-171
outward
opening
door frame

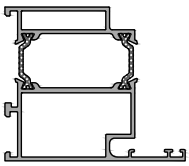

P61-172
inward
opening
door frame

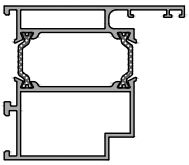

P61-173
outward
opening
stained-glass
door frame

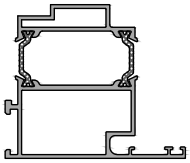

P61-174
inward
opening
stained-glass
door frame

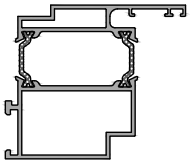

P61-202
Window sash
- PVC groove

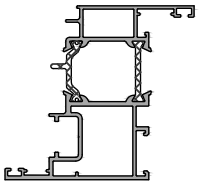

P61-203
Window sash
— ALU groove

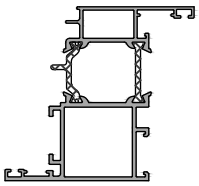

P61-216
ventilation sash
100 mm

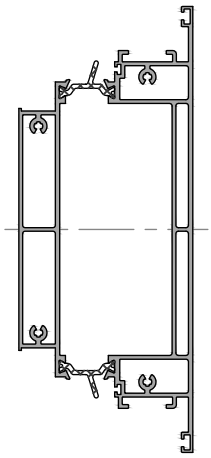

P61-217
ventilation
sash
adapter

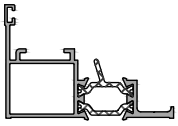

P61-271
T-shaped
door leaf

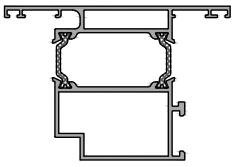

contents
profiles
delivery set
profiles (1:1)
sections
glazing tables
sub-assemblies tables
fitting arrangements
additional solutions
sub-assemblies
fire-resistant structures
connections
equipment and tools

P61-272
Z-shaped
door leaf

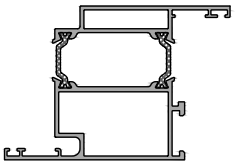

P61-301
mullion 99 mm

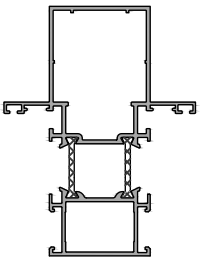

P61-304
mullion 164 mm

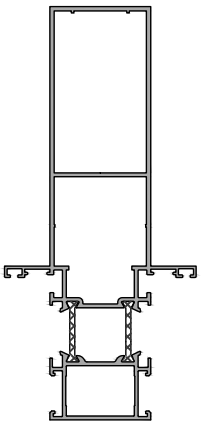

P61-321
mullion
99 mm
single-arm

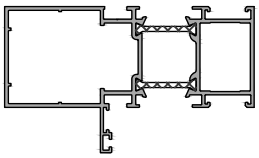

P61-401
impost

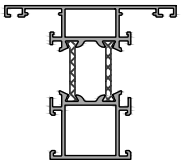

P61-302
mullion 114 mm

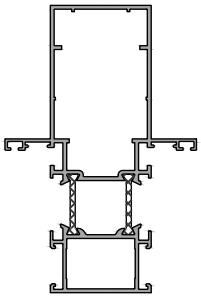

P61-403
medium
impost

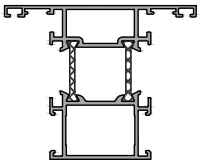

P61-403-69
window sash
impost

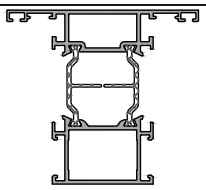

P61-322
mullion
114 mm
single-arm

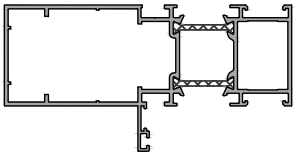

P61-404
impost extender
for valve installation

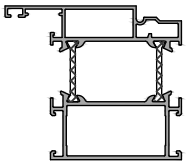

P61-303
mullion 134 mm

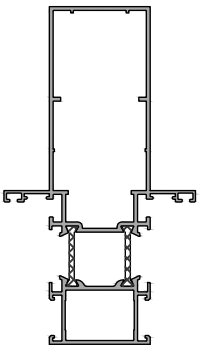

P61-405
Impost expander
68 mm

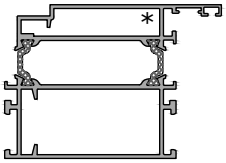

*** — delivery period 8–10 weeks**

P61-452
inward-reinforced
impost
120 mm

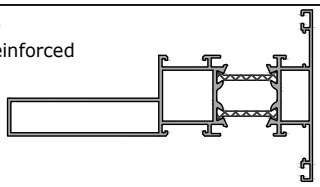

P61-323
mullion 134 mm
single-arm

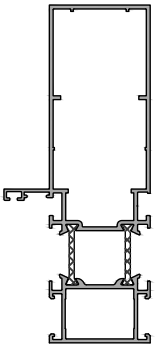

contents
profiles
delivery set
profiles (1:1)
sections
glazing tables
sub-assemblies tables
fitting arrangements
additional solutions
sub-assemblies
fire-resistant structures
connections
equipment and tools

contents
profiles
delivery set
profiles (1:1)
sections
glazing tables
sub-assemblies tables
fitting arrangements
additional solutions
sub-assemblies
fire-resistant structures
connections
equipment and tools

Advanced thermal insulating profiles — foamed inserts (M1:2)

P61-004

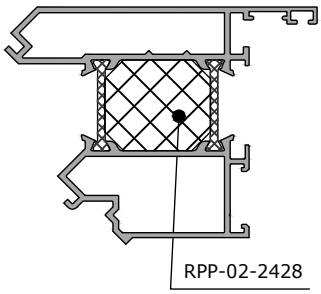

P61-101

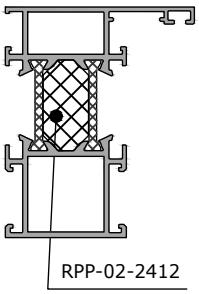

P61-102

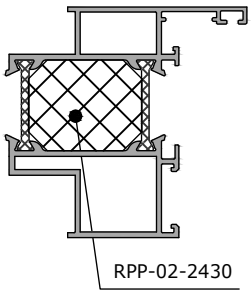

P61-103

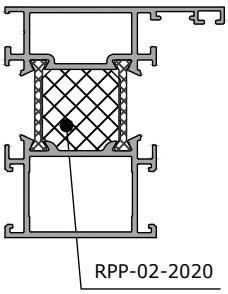

P61-171

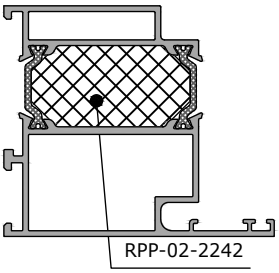

P61-172

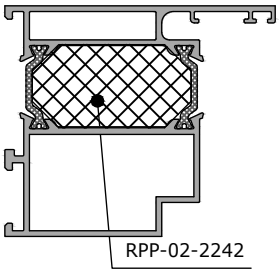

P61-173

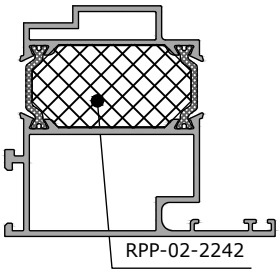

P61-174

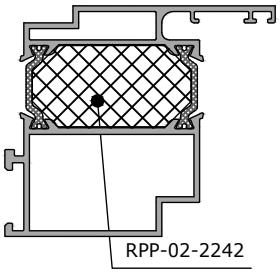

P61-202

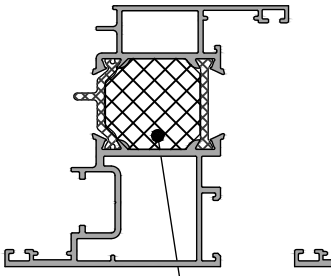

P61-203

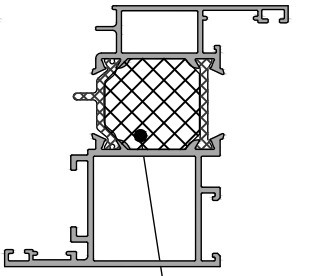

P61-271

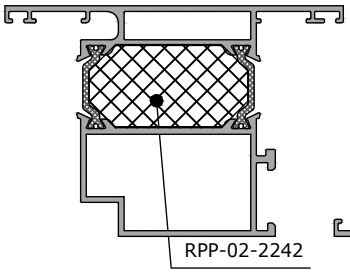

P61-272

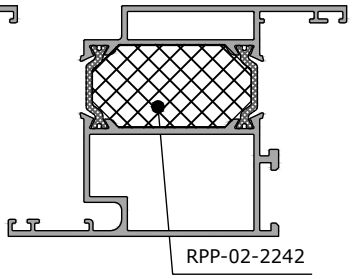

P61-301

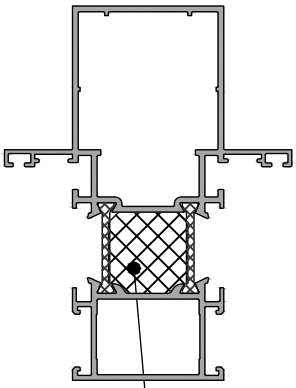

P61-302

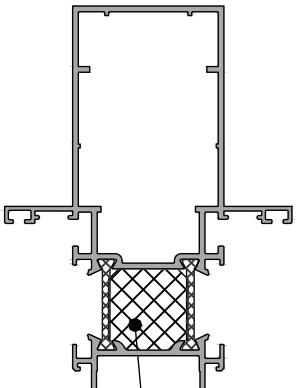

P61-303

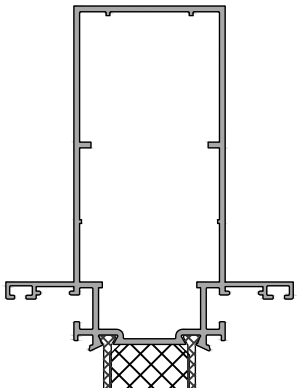

P61-304

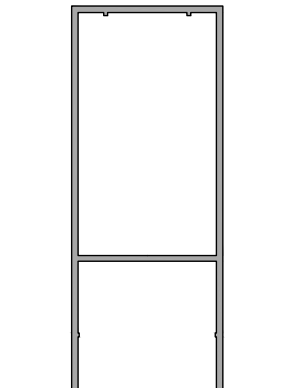

contents
profiles
delivery set
profiles (1:1)
sections
glazing tables
sub-assemblies tables
fitting arrangements
additional solutions
sub-assemblies
fire-resistant structures
connections
equipment and tools

P61-321

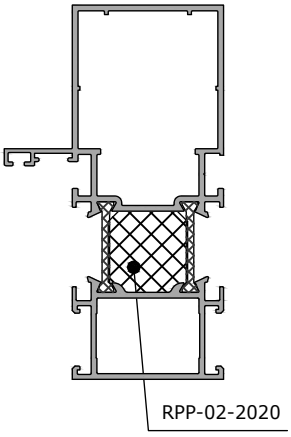

P61-322

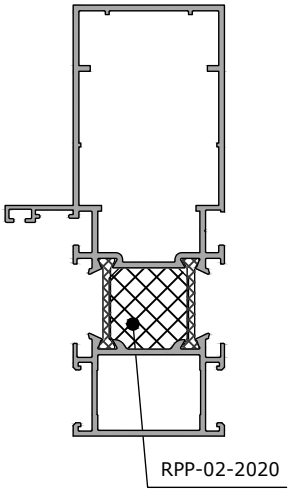

P61-323

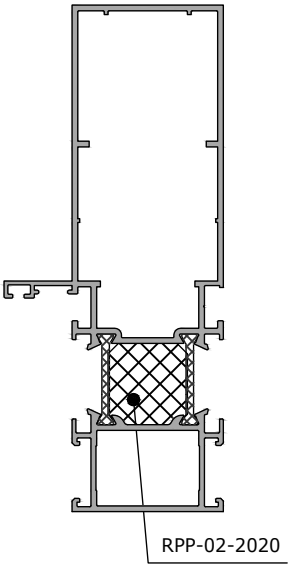

P61-452

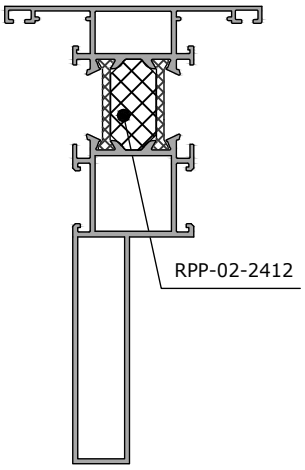

P61-401

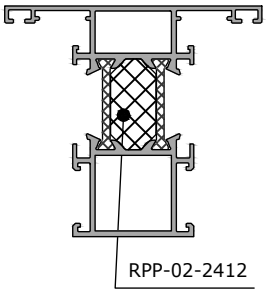

P61-403

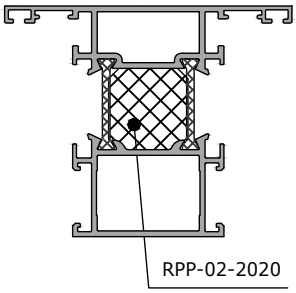

P61-404

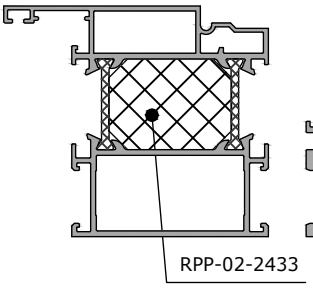

P61-405

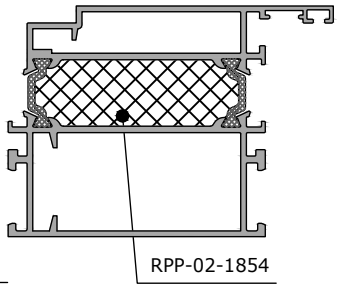

contents
profiles
delivery set
profiles (1:1)
sections
glazing tables
sub-assemblies tables
fitting arrangements
additional solutions
sub-assemblies
fire-resistant structures
connections
equipment and tools

Installation of RPP in the cavities of thermal bridge chambers

- RPP installation is mandatory for all MasTTech systems, all profiles with thermal bridges.
- After cutting the aluminium profiles (painted or anodised) to the required length and angle, insert the RPP into the cavity between the thermal bridges.
- Use a string or fishing line to draw the RPP into the cavity.
- Draw RPP with a 15 mm allowance for profiles undercut at 90° and a 30 mm allowance for profiles cut at other angles.
- Once the RPP has been installed with an allowance on both ends of the profile, trim it with a mounting or stationery knife.

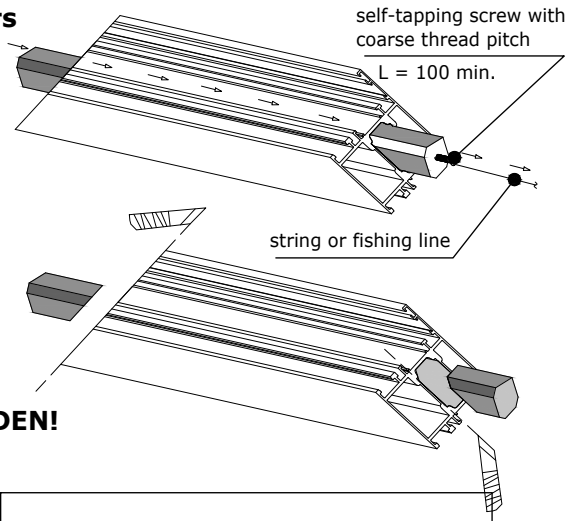

*** Installing the RPP in the profiles before cutting is FORBIDDEN!**

article of the insert	insert shape	chamber shape	profile list
RPP-03-1317 foamed insert 13 x 17 mm	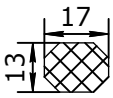	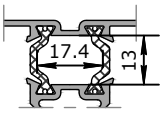	P61-002
RPP-02-1854 foamed insert 18 x 54 mm	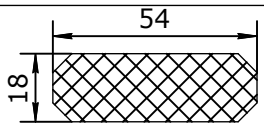	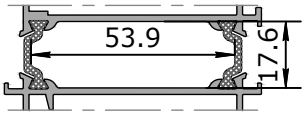	P61-405
RPP-02-2020 foamed insert 20 x 20 mm	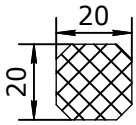	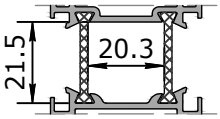	P61-103 P61-301, P61-302, P61-303, P61-304, P61-321, P61-322, P61-323, P61-403
RPP-02-2412 foamed insert 24 x 12 mm	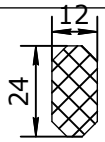	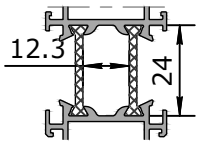	P61-101 P61-401 P61-452
RPP-02-2426 foamed insert 24 x 26 mm	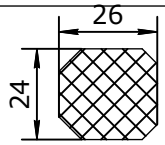	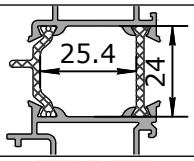	P61-201 P61-202 P61-203
RPP-02-2428 foamed insert 24 x 28 mm	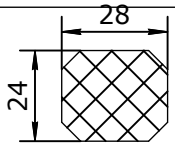	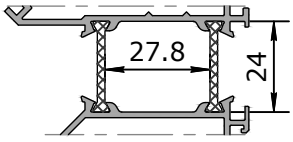	P61-004
RPP-02-2430 foamed insert 24 x 30 mm	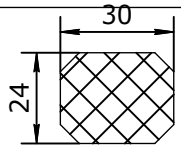	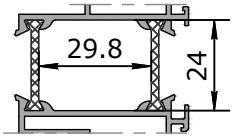	P61-102
RPP-02-2433 foamed insert 24 x 33 mm	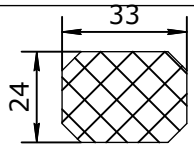	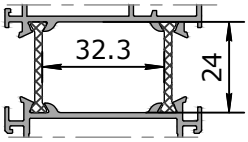	P61-404
RPP-02-2242 foamed insert 22 x 42 mm	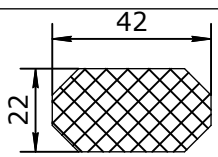	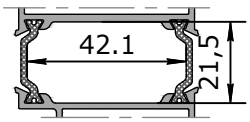	P61-171, P61-172, P61-173, P61-174, P61-271, P61-272

The specified dimensions of the foamed inserts are nominal — according to the size of the chamber formed by the thermal bridges of the profile. Actual dimensions may differ to the smaller side — taking into account the possibility of fitting an insert in the profile.

contents
profiles
delivery set
profiles (1:1)
sections
glazing tables
sub-assemblies tables
fitting arrangements
additional solutions
sub-assemblies
fire-resistant structures
connections
equipment and tools

C118-10
corner block
10.5 x 26.6 mm

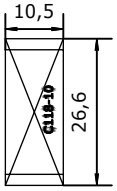

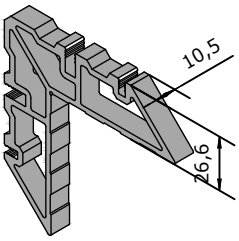

manufactured from profile P00-617

C121-06
Corner block
6.5 x 5.2

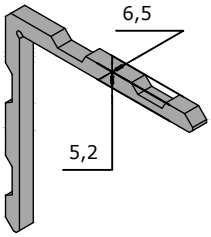

manufactured from profile P00-620

C521-26
impost block
narrow 26.5 mm
(for warm
systems)

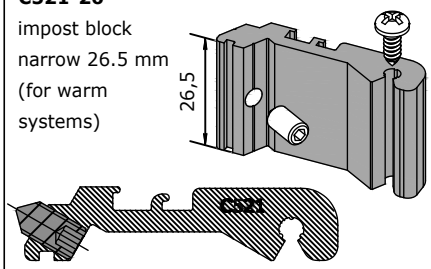

manufactured from profile P00-612

C118-20
corner block
19.4 x 26.6 mm

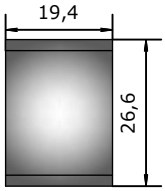

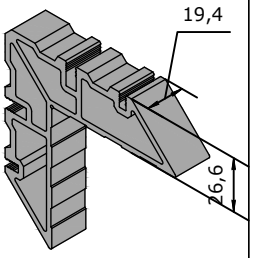

manufactured from profile P00-617

C127-07
corner block
7 x 33 mm

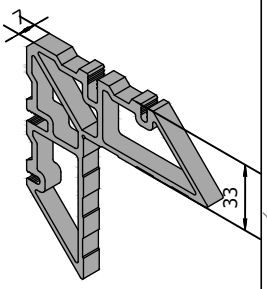

manufactured from profile P00-632

C522-20
impost block
medium 19.7 mm
(for warm
systems)

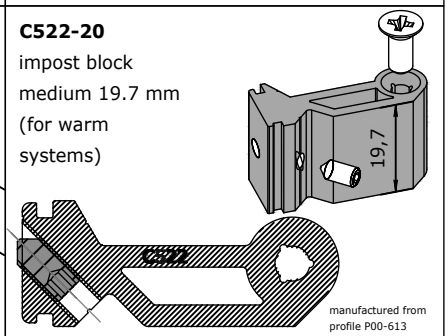

manufactured from profile P00-613

C120-07
Corner block,
7 x 19.7 mm

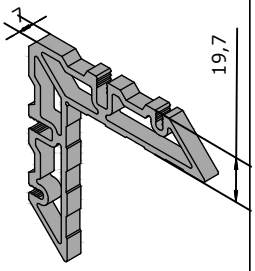

manufactured from profile P00-619

C127-25
corner block
25 x 33 mm

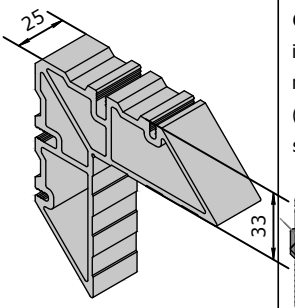

manufactured from profile P00-632

C522-26
impost block
medium 26.5 mm
(for warm
systems)

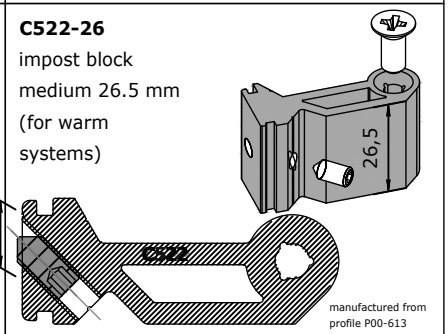

manufactured from profile P00-613

C120-11
Corner block,
10.6 x 19.7 mm

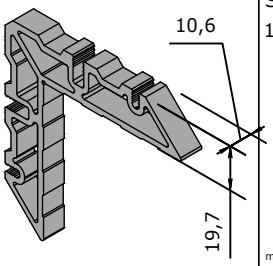

manufactured from profile P00-619

C150-10
Swivel block
10 mm

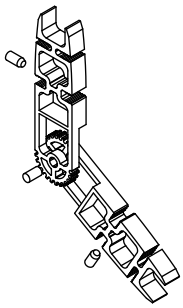

manufactured from profile P00-626-26

C528-20
Impost block
external 19.7 mm
(for warm systems)

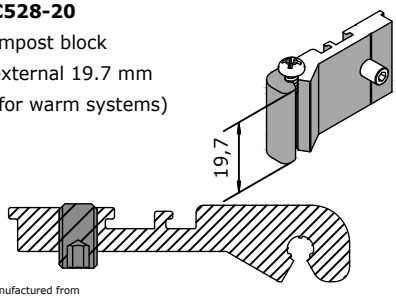

manufactured from profile P00-612-3

C120-20
Corner block,
19.4 x 19.7 mm

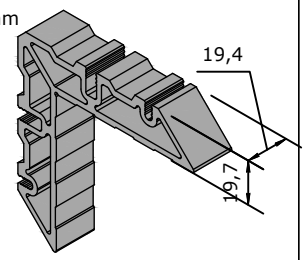

manufactured from profile P00-619

C150-20
Swivel block
20 mm

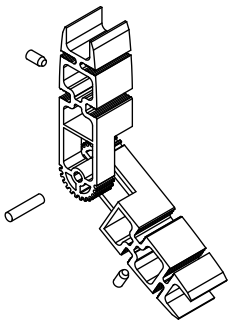

manufactured from profile P00-626-26

C528-26
Impost block
external 26.5 mm
(for warm systems)

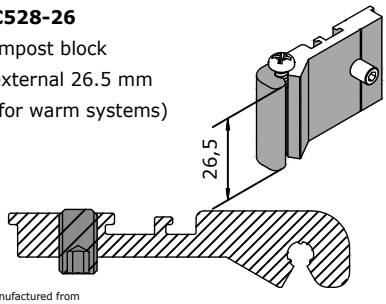

manufactured from profile P00-612-3

C120-36
Corner block,
35.6 x 19.7 mm

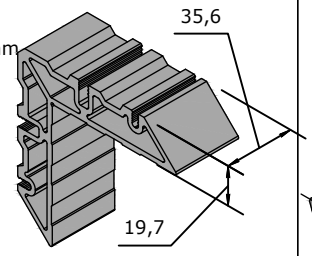

manufactured from profile P00-619

C521-20
impost block
narrow 19.7 mm
(for warm
systems)

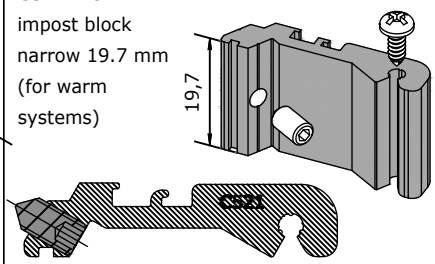

manufactured from profile P00-612

C530-22
Impost
block
21.2 x 14 mm

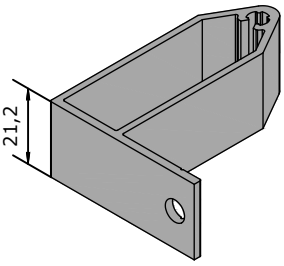

manufactured from profile P30-601

C602
Levelling angle
14.3 x 2.5

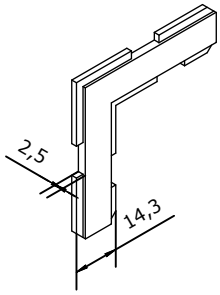

F020-3050
Rectangular cap
30 x 50 mm

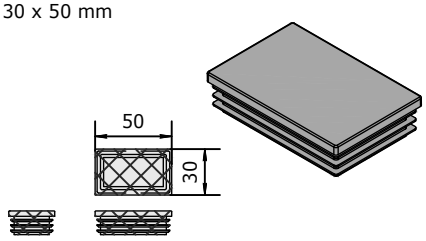

F020a-3038 — for P61-301

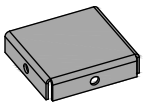

mullion end cap (aluminium)

C605
Leveling angle
10 x 1

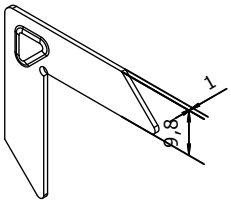

F020-55
Round cap 55 mm

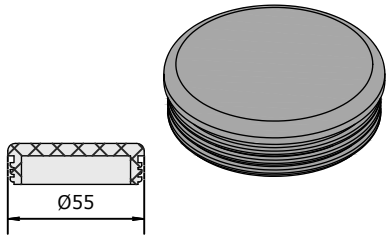

F022
Decorative cap,
d = 12 mm

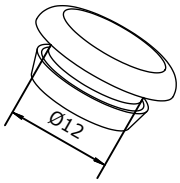

F017-18S
Mullion holder
18 mm

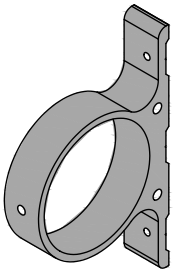

F020-6040
Rectangular cap
60 x 40 mm

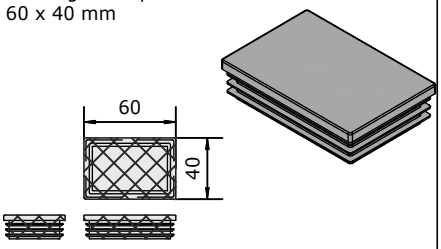

F027-25
Mullion
fastening
components

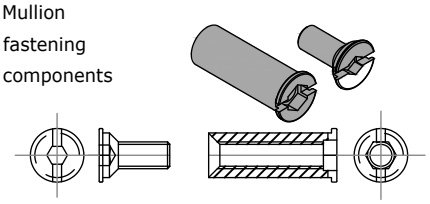

Components:
S801-0615 – 1 pc.
Screw M6 x 15 with flat triangle hexagonal socket head
S811-0628 – 1 pc.
threaded bush M6 x 28 with flat hexagon head

F017-30F
Frame holder
30 mm

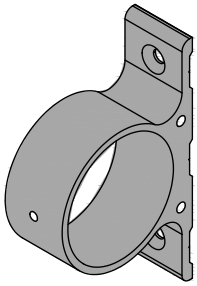

F020a-30103 — for P61-304

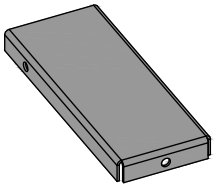

mullion end cap (aluminium)

F027-29
Bushings (2 pcs.)
and screws (4 pcs.)
for mullion fastening

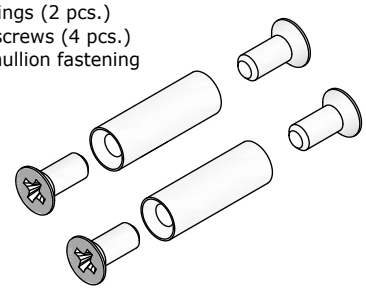

F020-30
Square cap
30 x 30

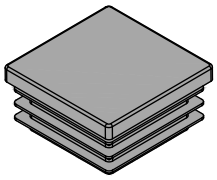

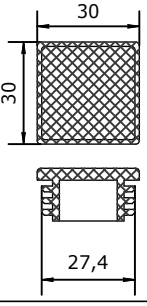

F020a-3073 — for P61-303

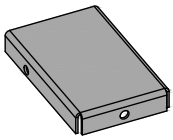

mullion end cap (aluminium)

F031
Water drain hole
cap D = 10

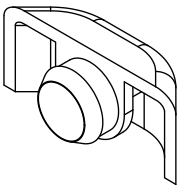

F020-3015
Rectangular cap
30 x 15

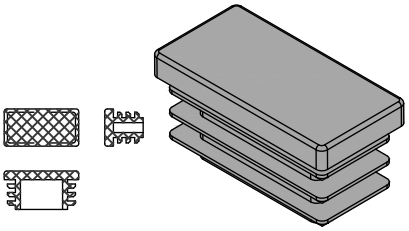

F020a-3053 — for P61-302

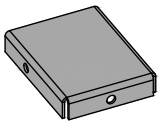

mullion end cap (aluminium)

F031-50
Water drain hole cap
(for MasTTech systems)

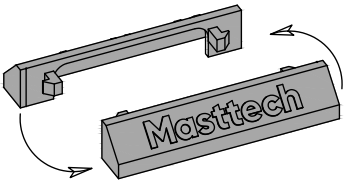

F037-61-01
toe end for MastTech-61 mullions

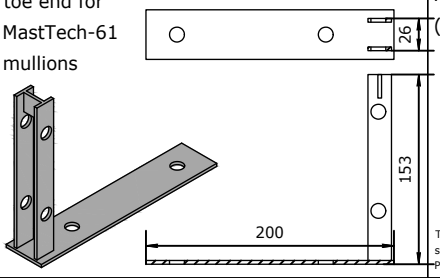

F080-4
Passive sash caps (pair)

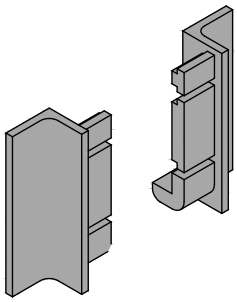

To be installed in the passive sash profiles P67-271 and P67-272

F205
Lever door handle (pair)

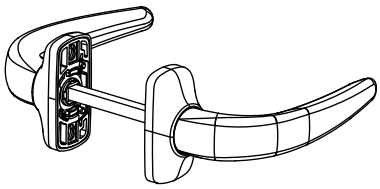

Pads
levelling
F039-2 — 35 x 2 mm

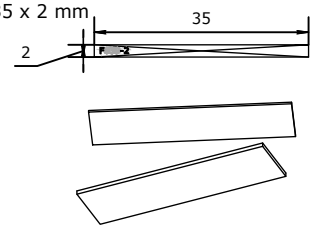

F081-61-100
Ventilation sash caps P61-216

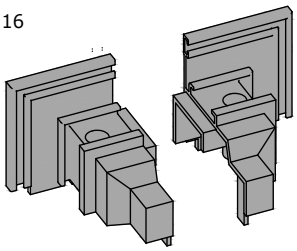

F206
Bail handle (300 mm) set

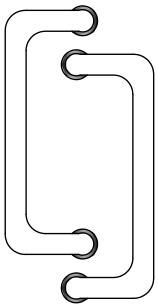

F068-2
Medium gasket corner connector R041E

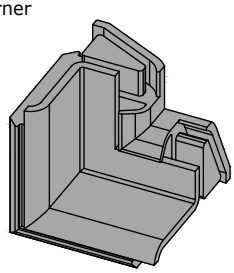

F085-61-01
sill mounting plate

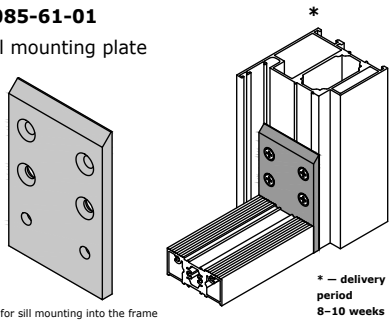

Used for sill mounting into the frame

*** — delivery period 8–10 weeks**

F209
Lever handle set with center-to-center distance of 85 mm

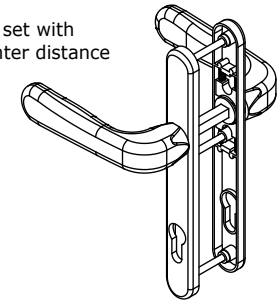

F068-41-18
Medium gasket corner connector R041-18E

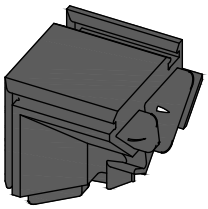

F152
60 mm anchor screw for flap hinge

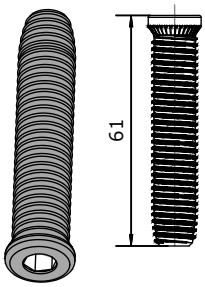

F509
In-floor catch socket, d = 9

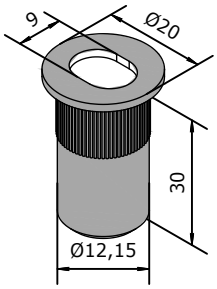

F075a-40-24
aluminum cap 40 x 24 mm

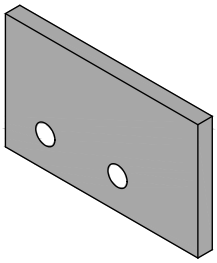

F152-77
anchor screw 77 mm for flap hinge

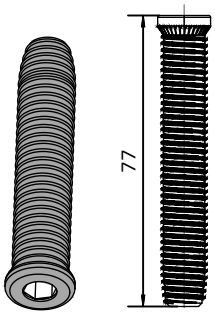

F511
Lever lock D = 30

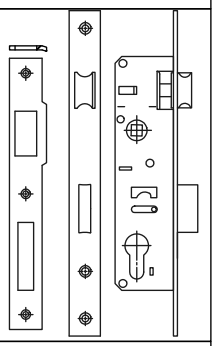

F075a-80-5
aluminium screen holder cap for 80 mm offset

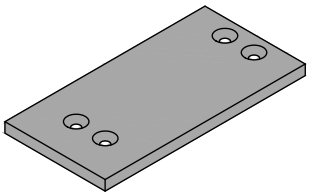

F161-2 2-section flap hinge
center-to-center distance of 67 mm (for anchor)

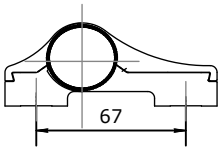

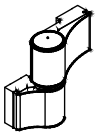

F161-3 3-section flap hinge
center-to-center distance of 67 mm (for anchor)

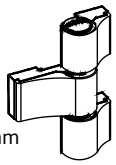

F513
Cylinder cover plate

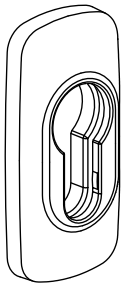

F517
Roller lock, with mating plate D = 30

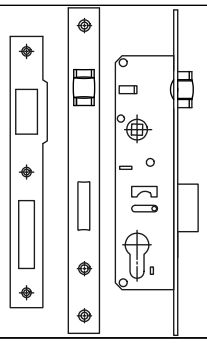

FF-3722A
Door catch 140 mm

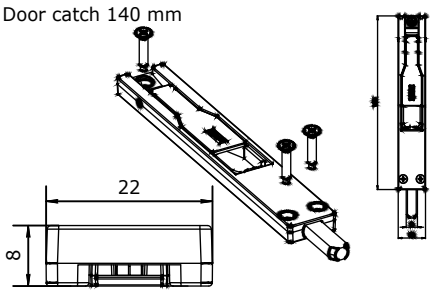

F807
Insect screen handle

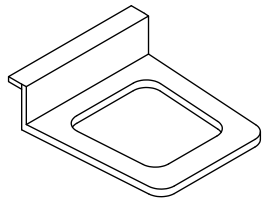

F522-50-30
Profile lock cylinder, 80 mm 30/50, key/key

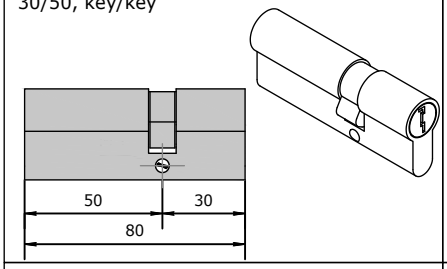

FF-3734
floor catch bolt mating plate

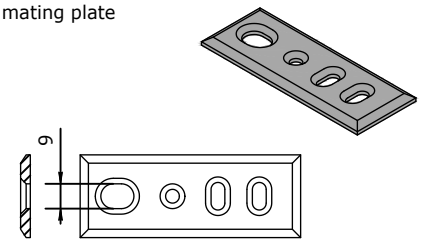

Glass retainer (glass magnesium board)

F901-20	— 3 x 50 x 20 mm
F902	— 3 x 14 x 30 mm
F905-24	— 3 x 50 x 24 mm
F905-32	— 3 x 50 x 32 mm
F905-38	— 3 x 50 x 38 mm
F905-42	— 3 x 50 x 42 mm
F905-44	— 3 x 50 x 44 mm
F905-50	— 3 x 50 x 50 mm

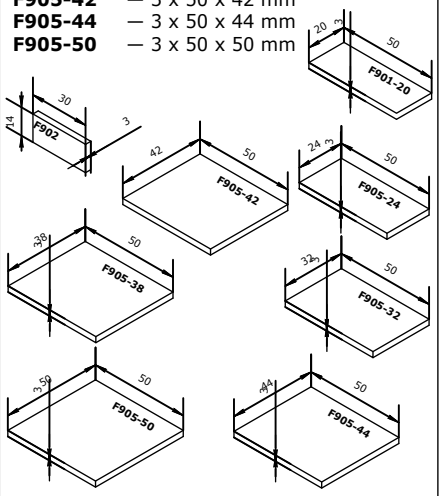

FF-2041
Lever door handle (pair)

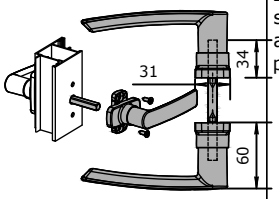

FF-2101
Door handle stud
⌀8 mm — length 132 mm

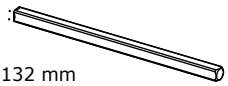

F801
Insect screen angle piece

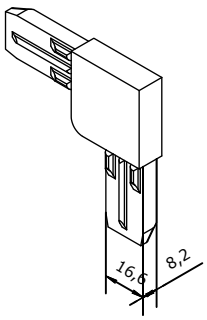

FF-2501B Fapim 2501B
lever lock with drop-out latch, D30

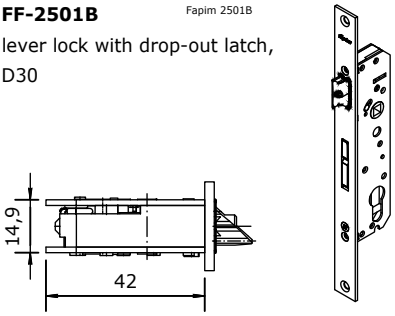

F802
Insect screen connection to impost

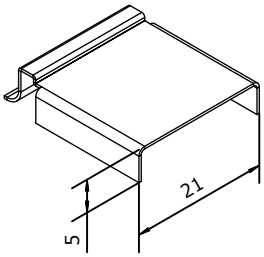

F917-50
steel retainer — external angle

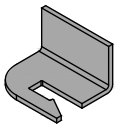

Stainless steel

FF-2501F Fapim 2501F
lever lock with drop-out latch, D30

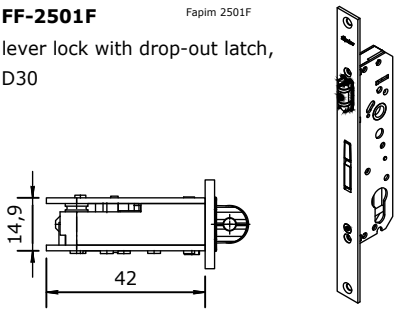

F805
Lower bracket of insect screen

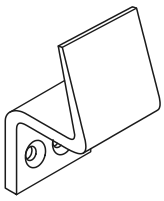

F918
external brace

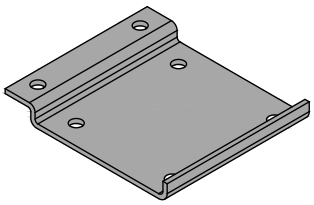

Stainless steel

FF-2618
adjustable mating plate

FF-2618A
pad to be placed under the mating plate

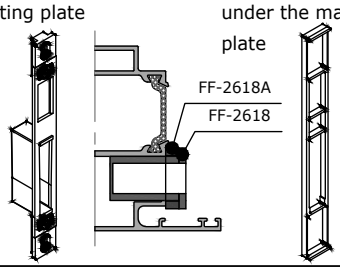

F806
Upper bracket of insect screen

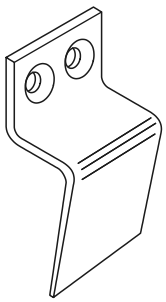

F918-55
external brace

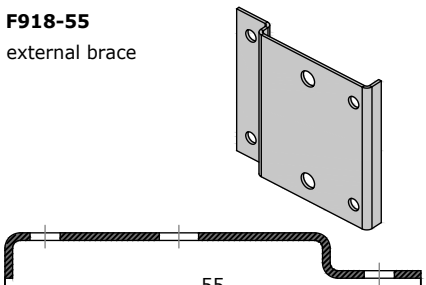

Stainless steel

contents
profiles
delivery set
profiles (1:1)
sections
glazing tables
sub-assemblies tables
fitting arrangements
additional solutions
sub-assemblies
fire-resistant structures
connections
equipment and tools

F921-01 — Supporting interlock plate

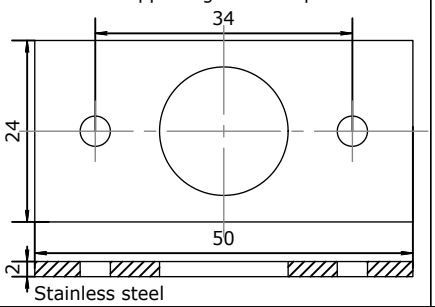

Stainless steel

F926-20
steel retainer — external sliding angle

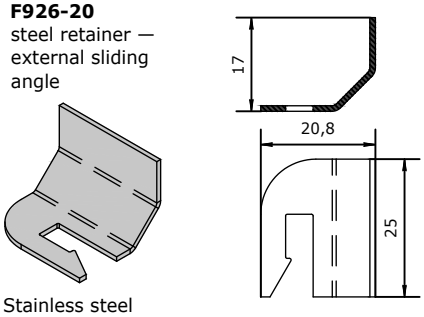

Stainless steel

F921-16
Thermal door interlock

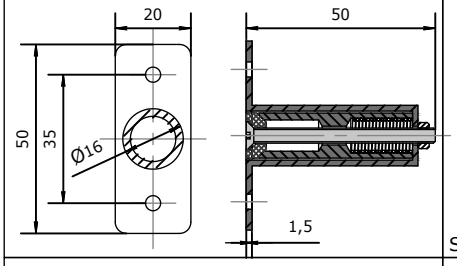

F928-38
steel retainer flat plate
38 x 50 mm

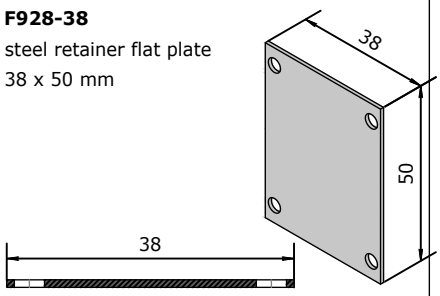

Stainless steel

steel retainers — internal angles
F921-42 — for filling 42 mm

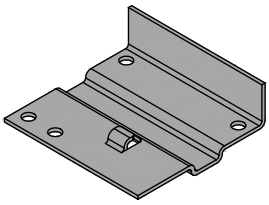

Stainless steel

Profile fillers
E010 — loose fire resistant material

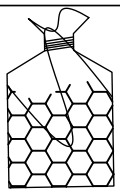

E011 — adhesive "liquid glass"

thermal expansion tape
F922-50 — 2 x 50 mm
F922-40 — 2 x 40 mm
F922-30 — 2 x 30 mm
F922-20 — 2 x 20 mm
F922-10 — 2 x 10 mm

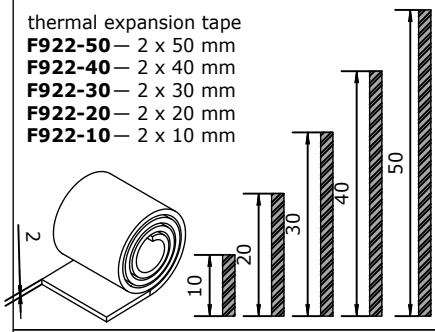

FF1459-90
Opening restrictor 90 mm

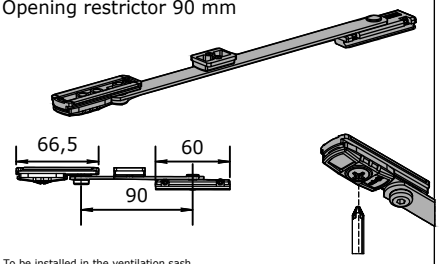

To be installed in the ventilation sash, with sash opening force adjustment.

F925-48
internal steel retainer 48 mm

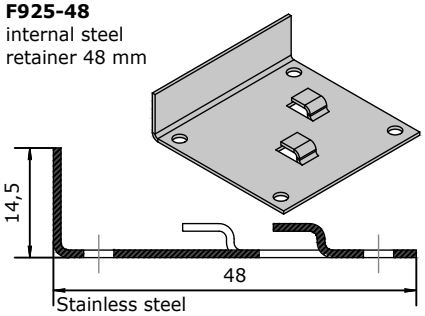

Stainless steel

FF-DG1030
nylon brush h = 25, L = 2000

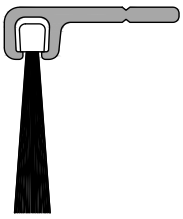

FF-DF500Ai
transversal brush holder, L = 2000

F925-50
internal steel retainer 50 mm

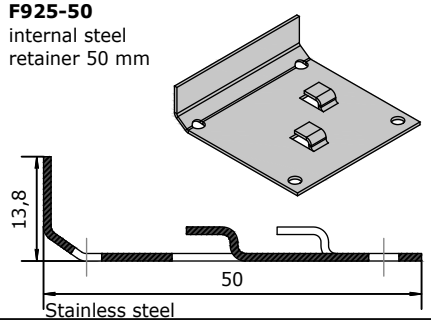

Stainless steel

contents
profiles
delivery set
profiles (1:1)
sections
glazing tables
sub-assemblies tables
fitting arrangements
additional solutions
sub-assemblies
fire-resistant structures
connections
equipment and tools

S001 — Self-tapping screw 3.5 x 9.5 with round head

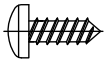

S001-35-13-ss
Self-tapping screw — stainless steel 3.5 x 13 with round head DIN 7981

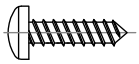

S001-35-60-ss
Self-tapping screw — stainless steel 3.5 x 60 with round head DIN 7981

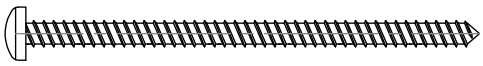

S002 — Self-tapping screw 3.5 x 13 with round head

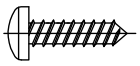

S002-35-13-ss
Self-tapping screw — stainless steel 3.5 x 13 with countersunk head DIN 7982

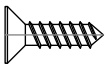

S003 — Self-tapping screw 3.5 x 32 with round head

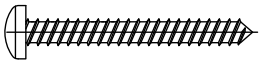

S006 — Self-tapping screw 3.9 x 19 with countersunk head

S006-13 — Self-tapping screw 3.9 x 13 with countersunk head

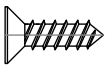

S008 — Self-tapping screw 3.9 x 32 with countersunk head

S015 — Self-tapping screw 5.5 x 45 with countersunk head

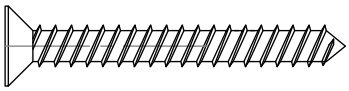

Sd003 — Self-drilling tapping screw 3.9 x 19 with countersunk head

Sd005-48-70 — Self-drilling tapping screw 4.8 x 70 with round head

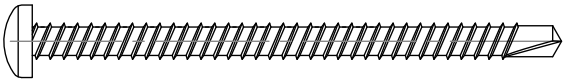

Sd001 — Self-drilling tapping screw 3.9 x 32 with countersunk head

Sd010-42-19
self-tapping screw with press-washer and drill 4.2 x 19

S202 — screw M6 x 14 with countersunk head

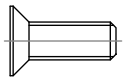

S205 — setting screw M5 x 10

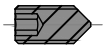

S216 — Screw M4 x 7 with round head

S330-06 — screw rivet M6

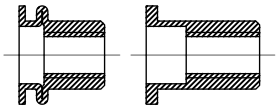

S402 — round pin d5 x 15

S403 — round pin d5 x 10

Levelling pads

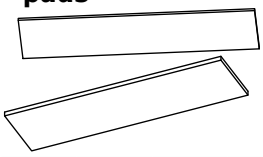

thickness / width	1 mm	2 mm	3 mm	4 mm	5 mm	6 mm
12 mm	F006	F007	F008	F009	F010	F039-612
22 mm	F001	F002	F003	F004	F005	
30 mm		F039-230				F039-630
35 mm		F039-2				
40 mm						F039-640
42 mm		F039-242				
46 mm	F039-146	F039-246	F039-346	F039-446	F039-546	F039-646
50 mm						F039-650
54 mm		F039-254				
60 mm						F039-660
66 mm		F039-266				

All fasteners used are made of stainless steel

contents
profiles
delivery set
profiles (1:1)
sections
glazing tables
sub-assemblies tables
fitting arrangements
additional solutions
sub-assemblies
fire-resistant structures
connections
equipment and tools

R004E
glass gasket internal 4–5 mm
EPDM

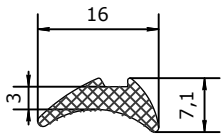

R041E
medium gasket for window rabbet ledge (thermal bridge 24)
EPDM

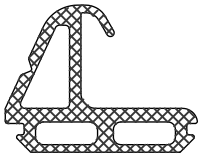

R068-2E
tapered gasket 8 mm
EPDM

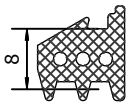

R007
insect screen gasket

R041-18E
medium gasket for window rabbet ledge
EPDM

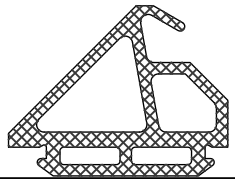

R068-10
tapered gasket 10 mm

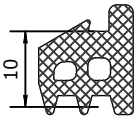

R011E
C-shaped gasket 5–6 mm
EPDM

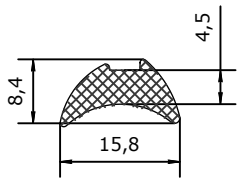

R046E
rabbet ledge gasket
EPDM

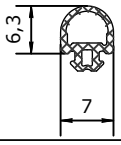

R072E
rabbet ledge gasket 2 mm
EPDM

R013-6E
external rabbet ledge gasket
EPDM

R048E
butt joint gasket 14 mm
EPDM

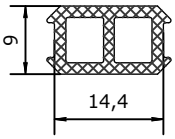

R301
façade gasket 1.5 mm

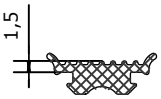

R015E
external glass gasket 1 mm
EPDM

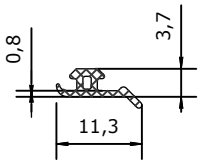

R052
harness sealing 3 mm

R303
façade gasket 3.5 mm

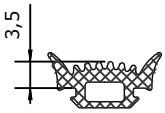

R017
Microclean gasket 10 mm

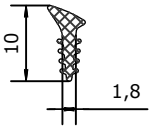

R053E
medium rabbet ledge gasket for thermal bridge
EPDM

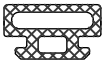

R305
façade gasket 5.5 mm

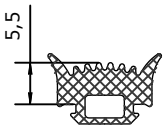

R018
Microclean gasket 13 mm

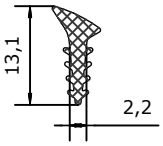

R054E
external gasket 5 mm
EPDM

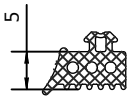

R307
façade gasket 7.5 mm

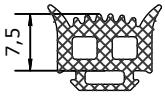

R019E
Microclean gasket 15 mm
EPDM

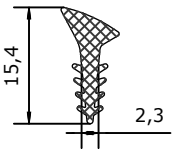

R055E
external gasket 3.5 mm
EPDM

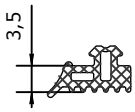

R309
façade gasket 9.5 mm

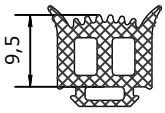

R021
felt gasket 5 x 8 mm

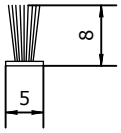

R064-2E
tapered gasket 4 mm
EPDM

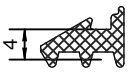

R311
façade gasket 11.5 mm

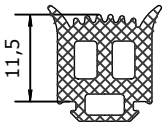

R021-2
gasket of rabbet ledge

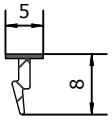

R065-2E
tapered gasket 5 mm
EPDM

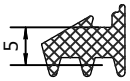

R313
façade gasket 13.5 mm

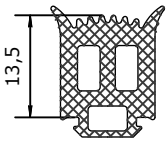

R040E
external glass gasket 2 mm
EPDM

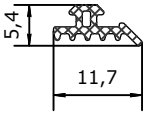

R066-2E
tapered gasket 6 mm
EPDM

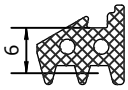

R315
façade gasket 15.5 mm

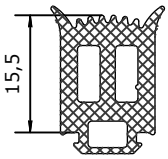

R317
façade gasket
17.5 mm

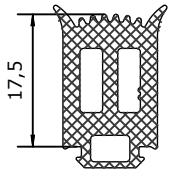

RP113
foamed gasket
37 x 5 mm

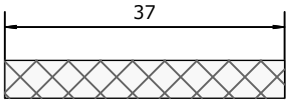

RPP-02-1317
foamed insert
13 x 17 mm
Scale 1:1

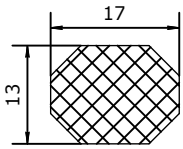

R319
façade gasket
19.5 mm

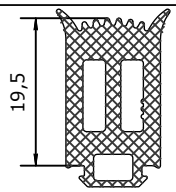

RV-15
Vilatherm
15 mm (solid)

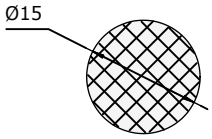

RPP-02-1854
foamed insert
18 x 54 mm
Scale 1:2

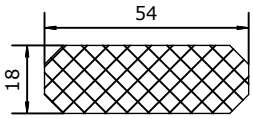

R321
façade gasket
21.5 mm

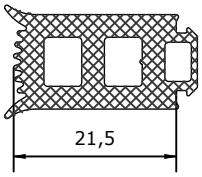

RV-20-8-6
Vilatherm
20 mm (8/6)

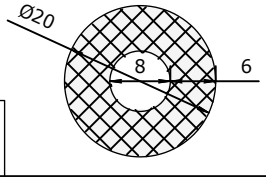

RPP-02-2020
foamed insert
20 x 20 mm
Scale 1:2

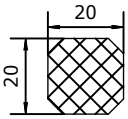

R323
façade gasket
23.5 mm

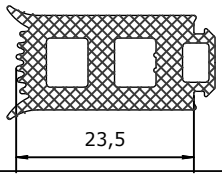

RV-23-11-6
Vilatherm
23 mm (11/6)

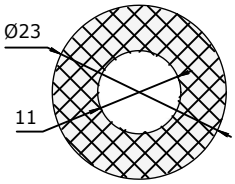

RPP-02-2412
foamed insert
24 x 12 mm
Scale 1:2

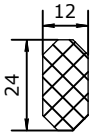

RP104
foamed gasket
44 x 5 mm

RV-30-18-6
Vilatherm
30 mm (18/6)
Scale 1:2

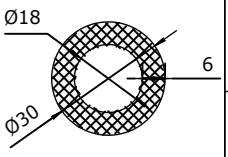

RPP-02-2426
foamed insert
24 x 26 mm
Scale 1:2

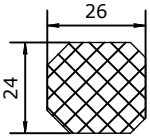

RP107
foamed gasket

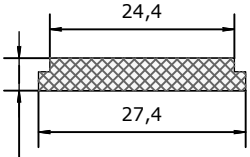

RV-40-10
Vilatherm
40/10 mm

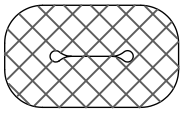

RPP-02-2428
foamed insert
24 x 28 mm
Scale 1:2

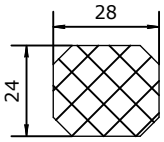

RP107-2
foamed gasket

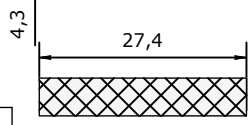

PP-024
façade spacer
24 x 20 mm

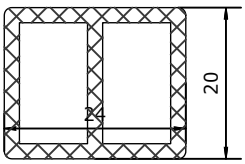

RPP-02-2430
foamed insert
24 x 30 mm
Scale 1:2

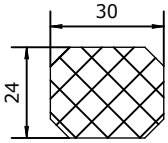

RP108
foamed gasket

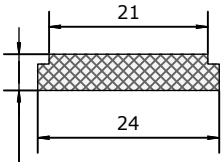

PP-032
façade spacer
32 x 20 mm

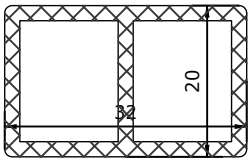

RPP-02-2433
foamed insert
24 x 33 mm
Scale 1:2

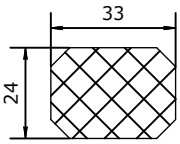

RP108-2
foamed gasket

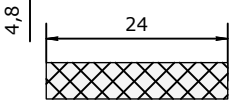

PP-101-01
universal underlaying profile
Scale 1:2

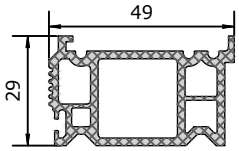

RPP-02-2242
foamed insert
22 x 42 mm
Scale 1:2

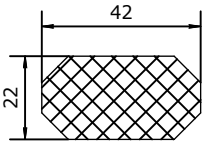

RP109-2
foamed gasket

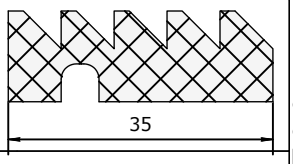

RP112
foamed gasket
37 x 10

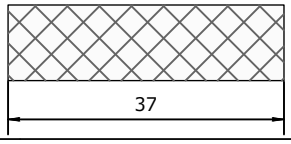

PP-061-01
angle adapter profile
Scale 1:2

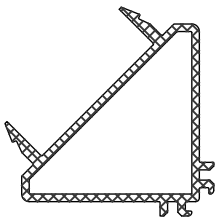

contents
profiles
delivery set
profiles (1:1)
sections
glazing tables
sub-assemblies tables
fitting arrangements
additional solutions
sub-assemblies
fire-resistant structures
connections
equipment and tools

contents
profiles
delivery set
profiles (1:1)
sections
glazing tables
sub-assemblies tables
fitting arrangements
additional solutions
sub-assemblies
fire-resistant structures
connections
equipment and tools

FPfor-200-1
Orion window handle

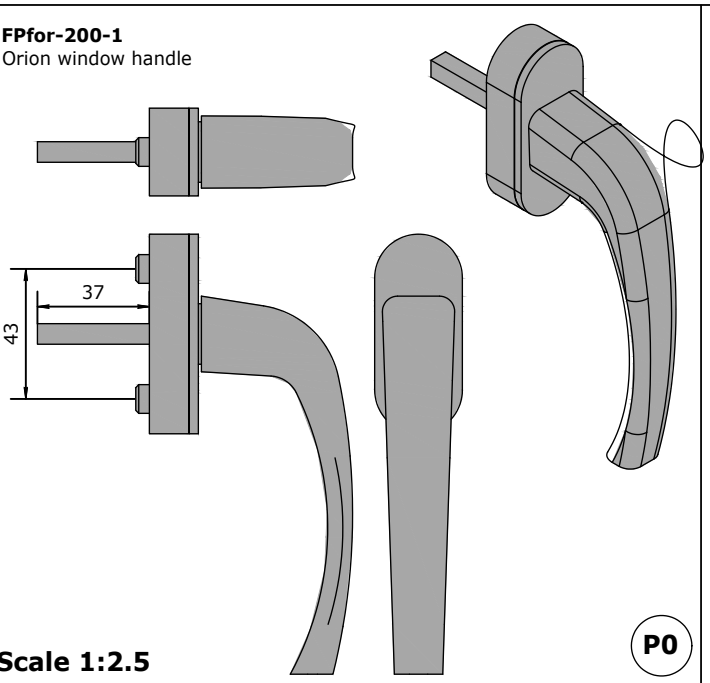

Scale 1:2.5

P0

FPfor-200-2
AKUSTIK window handle

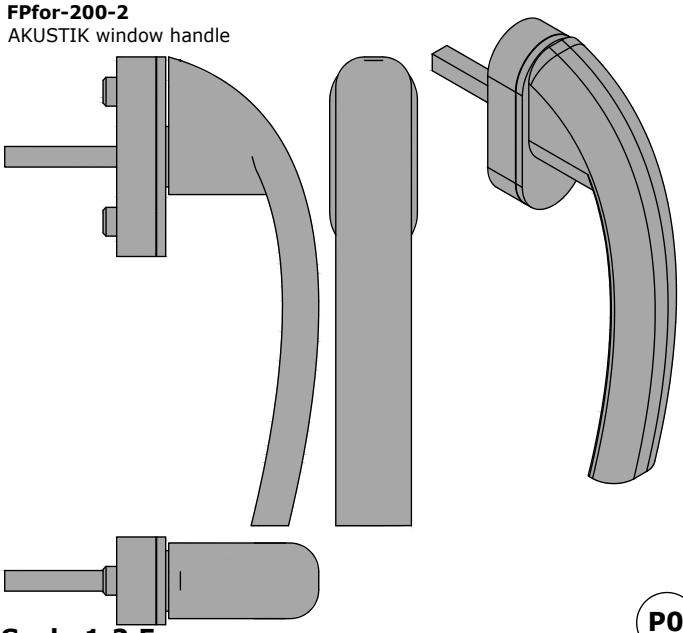

Scale 1:2.5

P0

FPfor-200-3
GRANADA window handle

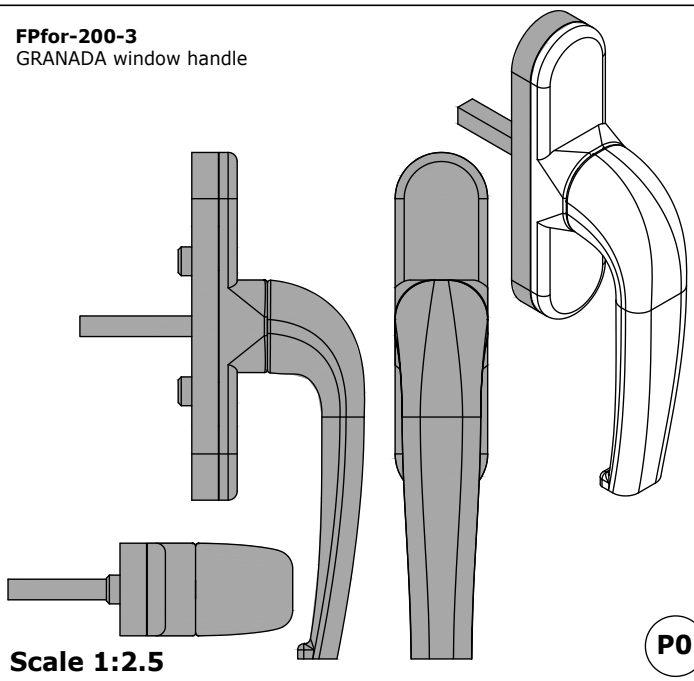

Scale 1:2.5

P0

Tilt & turn variation mechanism

article	size	sash height over rebate (SHR)	A	B	C		
FPfor-602-0	GR 0-1	480-700	628	-	-	0	0
FPfor-602-1-1	GR 1	685-1100	830	120	-	2	1
FPfor-602-2	GR 2	885-1300	1030	120	-	4	1
FPfor-602-2-2	GR 2-2	985-1400	1130	120	275	4	2
FPfor-602-3	GR 3	1185-1600	1330	120	300	6	2
FPfor-602-4	GR 4	1385-1800	1530	272	272	8	2
FPfor-602-5	GR 5	1585-2000	1730	322	322	8	2
FPfor-602-6	GR 6	1985-2400	2130	372	372	10	2

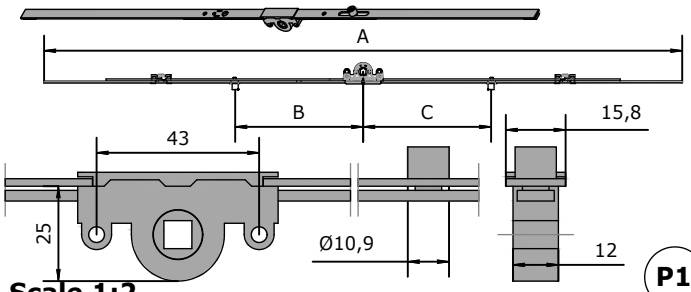

Scale 1:2

The application range shall be selected according to sash width over rebate (SWR)

P1

FPfor-612
Corner switch 135 x 135

6	1

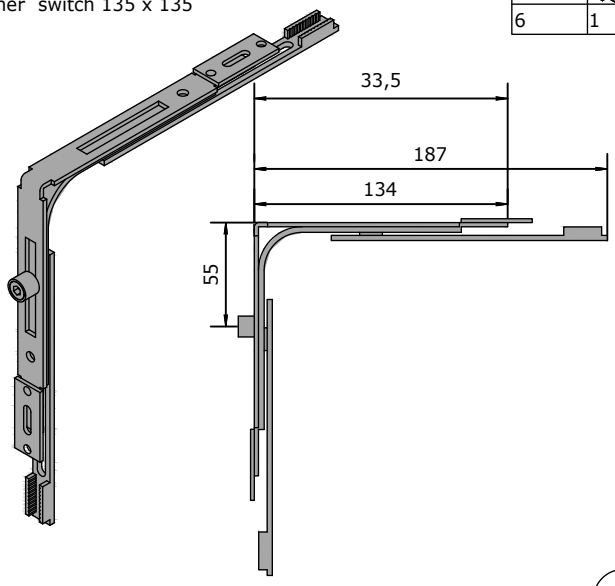

Scale 1:4

P2

FPfor-6161
hinged latch

4	1

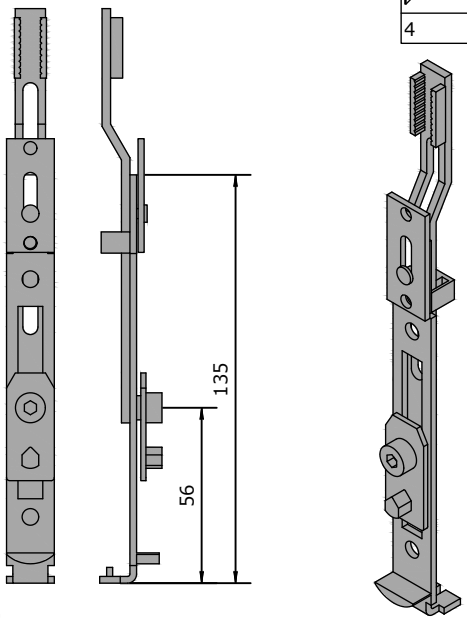

Scale 1:2.5

P3

contents
profiles
delivery set
profiles (1:1)
sections
glazing tables
sub-assemblies tables
fitting arrangements
additional solutions
sub-assemblies
fire-resistant structures
connections
equipment and tools

Tilt & turn scissor stay for window

article	size	sash width over rebate (SWR)	A	B		
FPfor-615-1	GR 1	395-600	465	-	3	0
FPfor-615-1-1	GR 1-1	400-650	515	-	-	-
FPfor-615-2-1	GR 2-1	595-800	665	392	5	1
FPfor-615-3	GR 3	795-1000	865	542	7	1
FPfor-615-4	GR 4	995-1200	1065	542	8	1
FPfor-615-5	GR 5	1195-1400	1265	781	9	1
FPfor-615-6	GR 6	1395-1600	1465	865	11	1

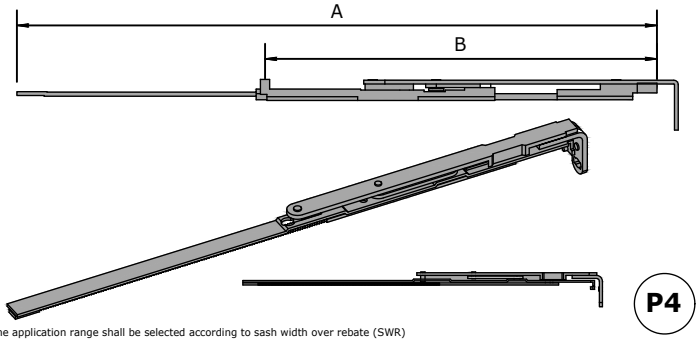

The application range shall be selected according to sash width over rebate (SWR)

P4

Medium latch

article	size	sash height over rebate (SHR)/sash width over rebate (SWR)	A	B	C	D		
FPfor-611-0	GR 0-1	500-800	391	-	-	-	3	1
FPfor-611-1-1	GR 1	700-1150	542	460	-	-	4	2
FPfor-611-2	GR 2	1150-1350	742	660	-	-	5	2
FPfor-611-2-1	GR 2-1	1350-1600	992	460	910	-	5	3
FPfor-611-3	GR 3	1600-1850	1242	460	1160	-	7	3
FPfor-611-4	GR 4	1850-2100	1486	674	1404	-	8	3
FPfor-611-5	GR 5	2100-2400	1785	460	1060	1703	10	4

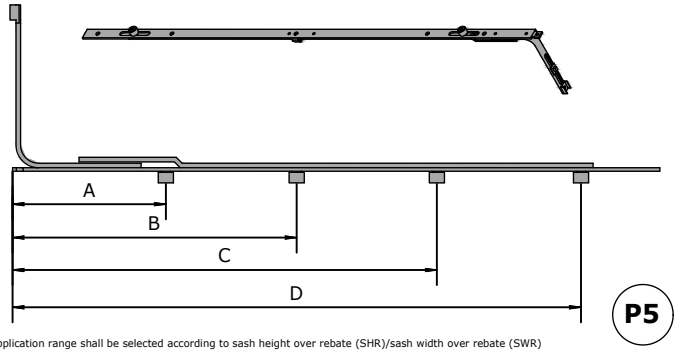

The application range shall be selected according to sash height over rebate (SHR)/sash width over rebate (SWR)

P5

FPfor-101
Upper hinge on the frame

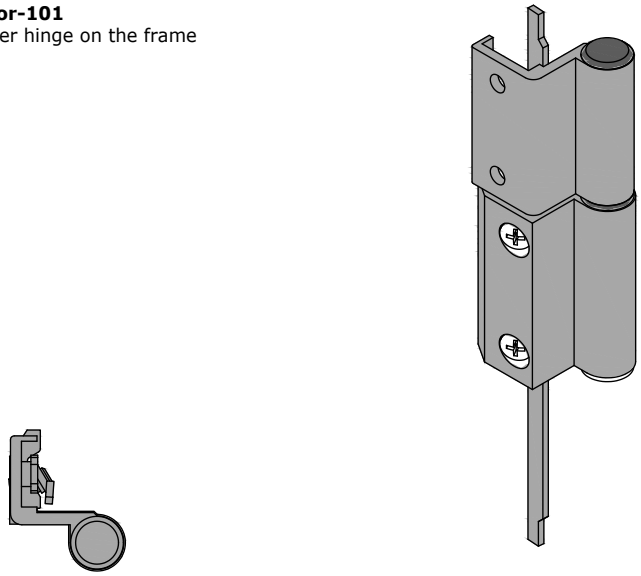

Scale 1:2

P6

FPfor-102
Lower hinge

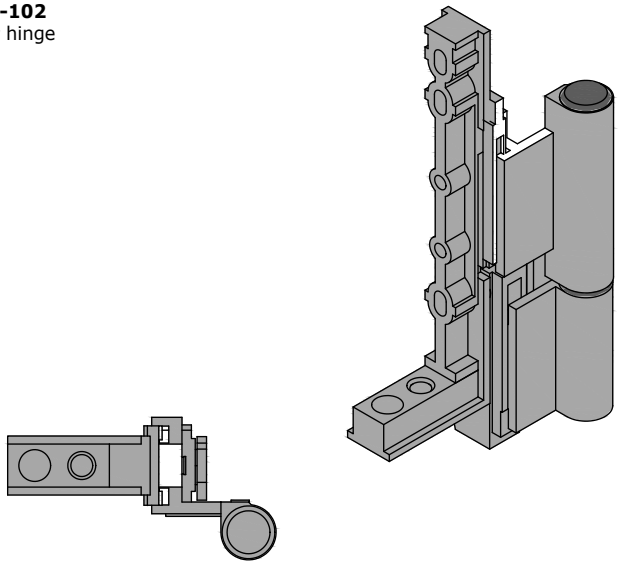

Scale 1:2

P7

FPfor-6162
mating plate (vertical) for hinged latch

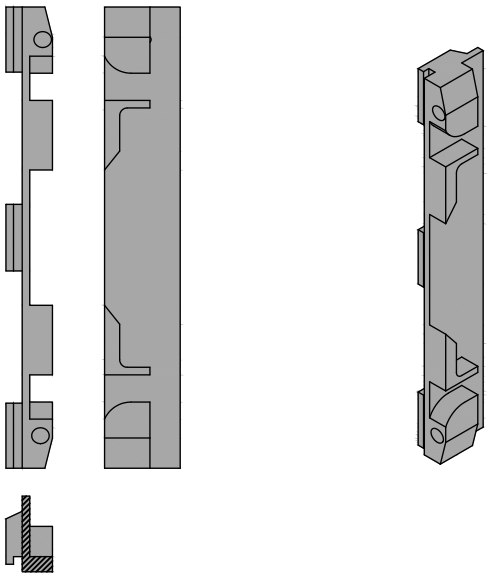

Scale 1:2

P8

FPfor-111
top hinge on the sash (for turn windows)

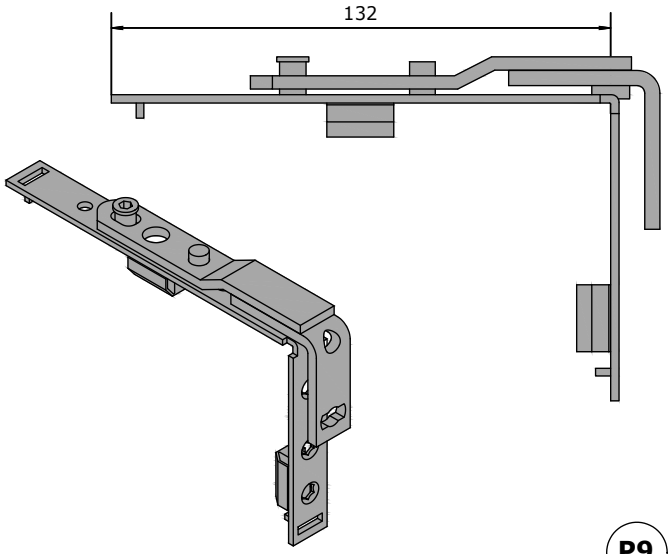

Scale 1:2

P9

contents
profiles
delivery set
profiles (1:1)
sections
glazing tables
sub-assemblies tables
fitting arrangements
additional solutions
sub-assemblies
fire-resistant structures
connections
equipment and tools

FPfor-501-1
end latch upper
(for turn windows)

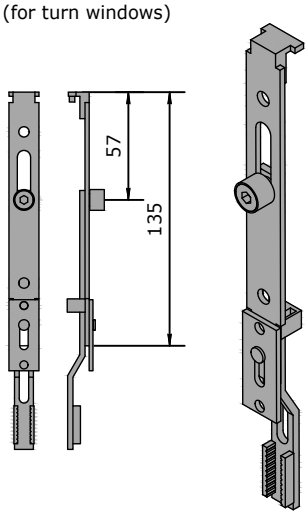

Scale 1:4

P10-1

FPfor-501-2
end latch lower
(for turn windows)

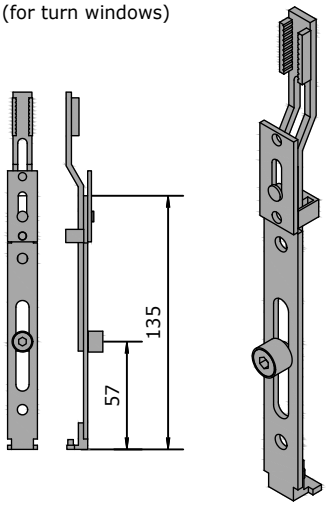

Scale 1:4

P10-2

FPfor-453
additional clamp (hinge side)

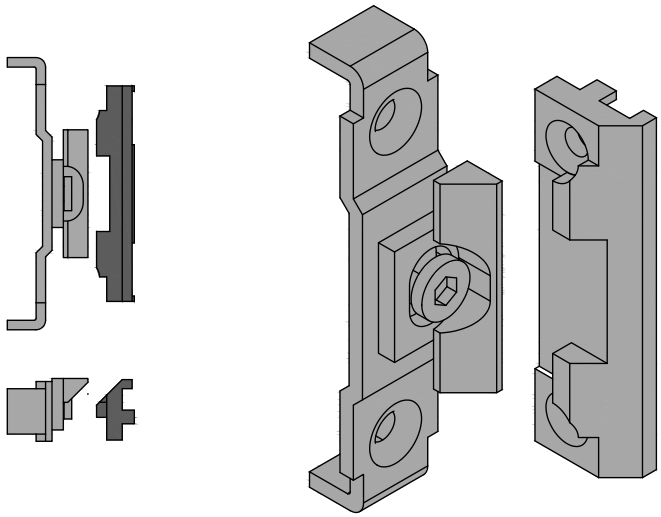

Scale 1:2

P11

FPfor-511
upper forend catch

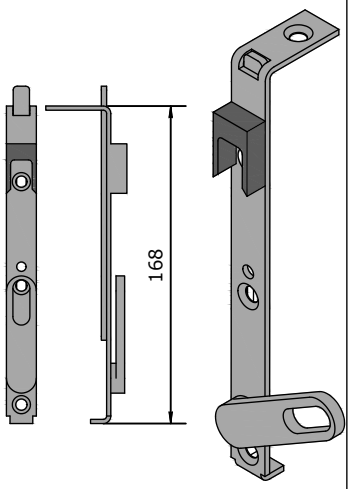

Scale 1:4

P12-1

FPfor-512
lower forend catch

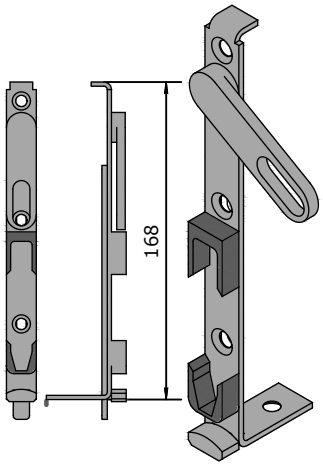

Scale 1:4

P12-2

Forend mechanism

article	size	sash height over rebate (SHR)	A	B	C		
FPfor-405-1	GR 1	585-1000	730	-	-	2	0
FPfor-405-2	GR 2	885-1300	1030	120	-	4	1
FPfor-405-3	GR 3	1185-1600	1330	120	-	6	2
FPfor-405-4	GR 4	1385-1800	1530	272	272	8	2
FPfor-405-5	GR 5	1585-2000	1730	322	322	8	2
FPfor-405-6	GR 6	1985-2400	2130	372	372	10	2

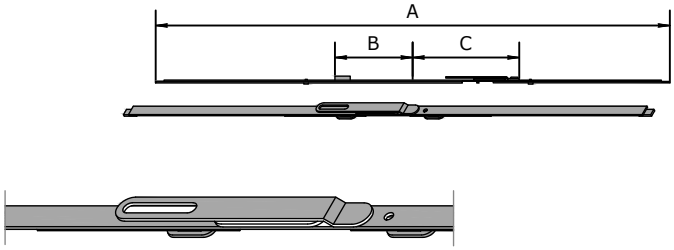

P13-0

FPfor-521
upper catch of
forend mechanism

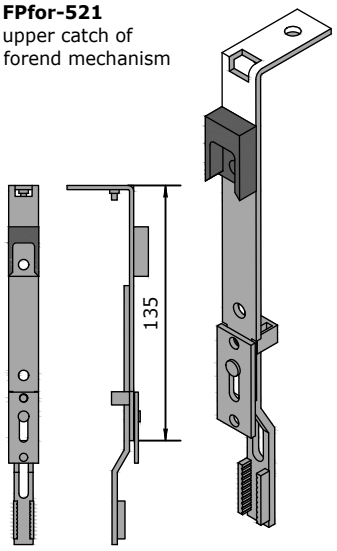

Scale 1:4

P13-1

FPfor-522
lower catch of
forend mechanism

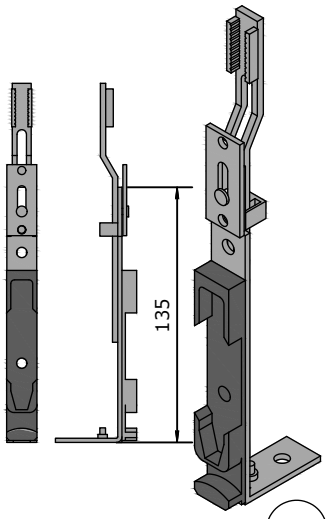

Scale 1:4

P13-2

FPfor-463
lock/lifter

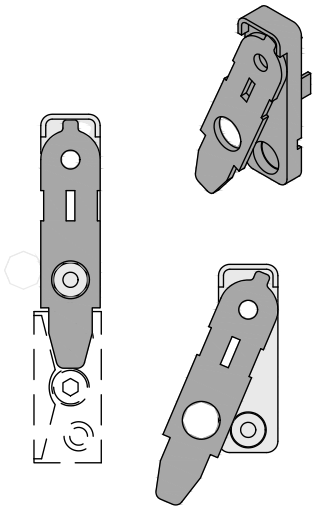

Scale 1:2

P14

FPfor-464-1
lifter mating plate for installation on
a frame

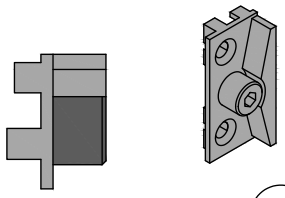

Scale 1:1

P15-1

FPfor-464-2
lifter mating plate for installation on
a forend

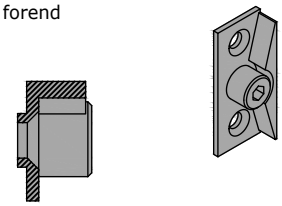

Scale 1:1

P15-2

contents
profiles
delivery set
profiles (1:1)
sections
glazing tables
sub-assemblies tables
fitting arrangements
additional solutions
sub-assemblies
fire-resistant structures
connections
equipment and tools

FPfor-455
balcony latch

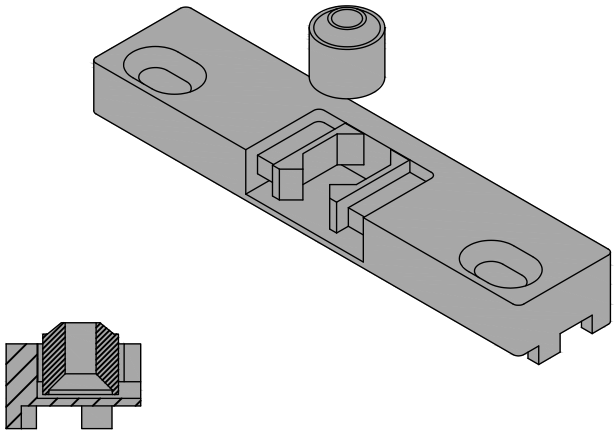

Scale 1:1

P16

FPfor-462-1
child safety snaplock
(plastic cover plates)

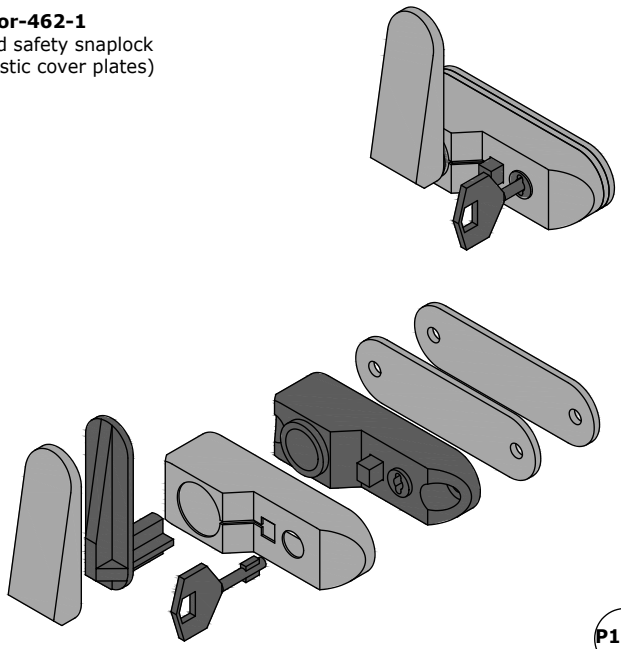

P17-1

FPfor-462-2
child safety cable hasp lock
(plastic cover plates)

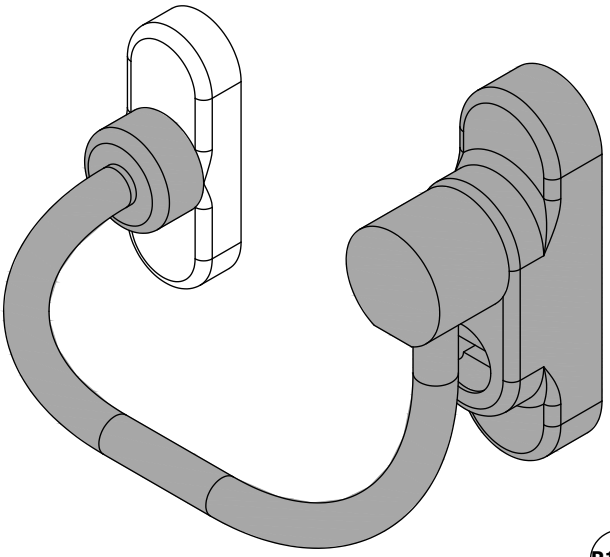

P17-2

cable length — 170 mm

contents
profiles
delivery set
profiles (1:1)
sections
glazing tables
sub-assemblies tables
fitting arrangements
additional solutions
sub-assemblies
fire-resistant structures
connections
equipment and tools

contents
profiles
delivery set
profiles (1:1)
sections
glazing tables
sub-assemblies tables
fitting arrangements
additional solutions
sub-assemblies
fire-resistant structures
connections
equipment and tools

Ffor-203
2-position handle

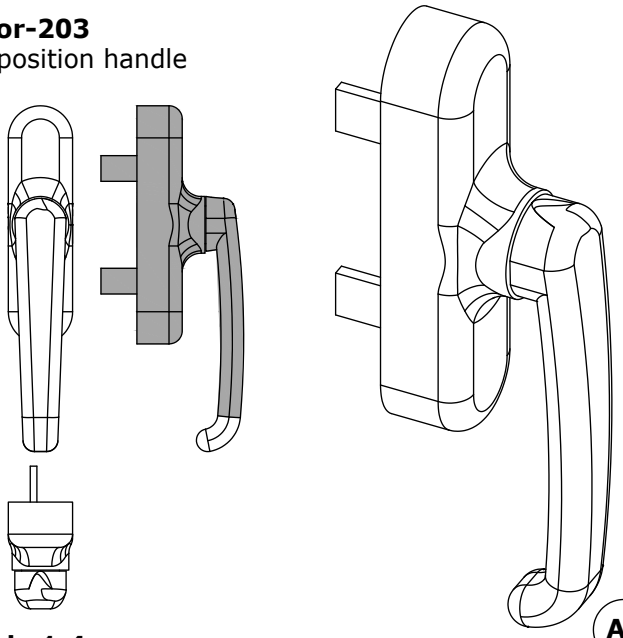

Scale 1:4

A0

Ffor-202
2-position handle couplings (metal)

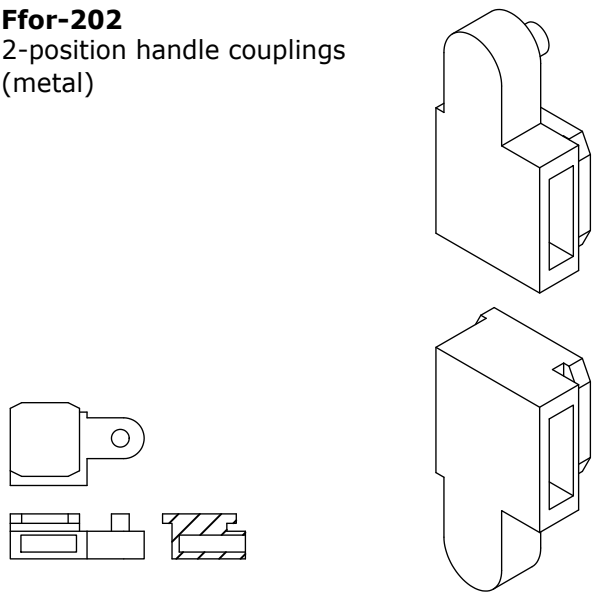

Scale 1:2

A1

Ffor-406
forend system catches

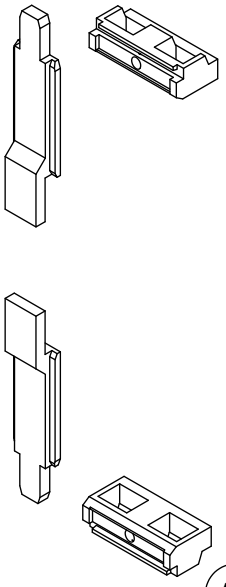

A2

Ffor-521
turn window catch set

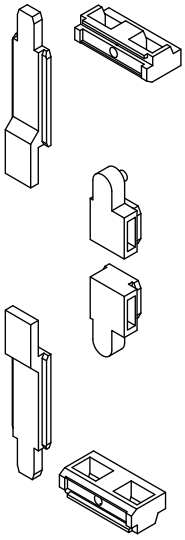

A3

Ffor-405
Forend system handle

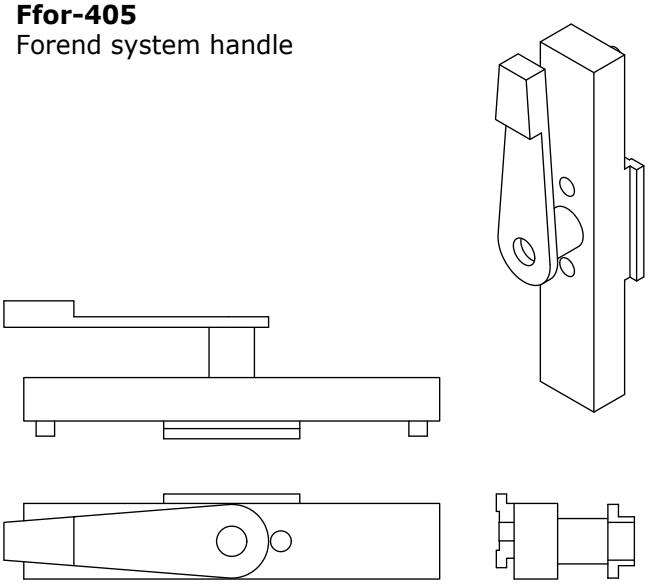

Scale 1:2

A4

Ffor-023
sash lifter

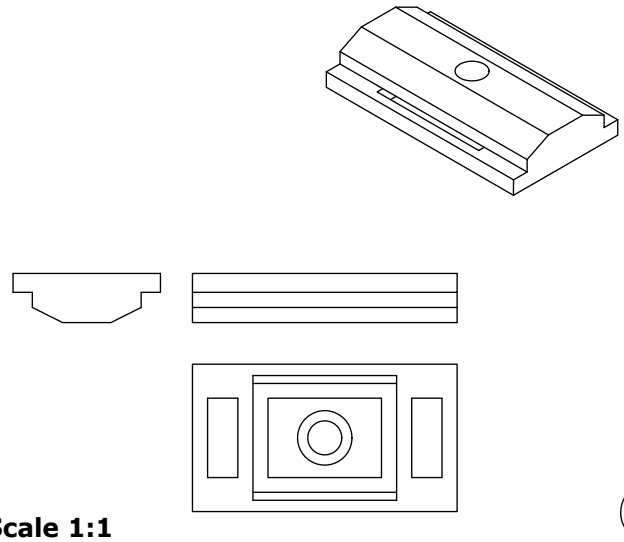

Scale 1:1

A5

contents
profiles
delivery set
profiles (1:1)
sections
glazing tables
sub-assemblies tables
fitting arrangements
additional solutions
sub-assemblies
fire-resistant structures
connections
equipment and tools

Ffor-101
window hinge

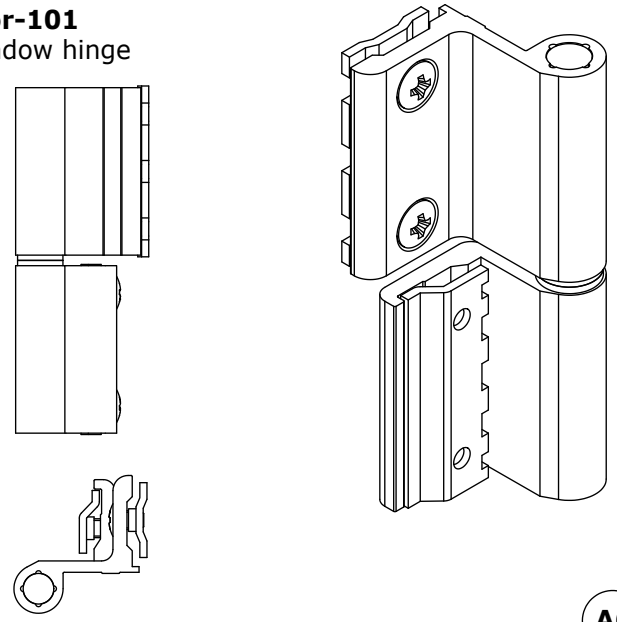

Scale 1:2

A6

Ffor-504
mating plate of pin

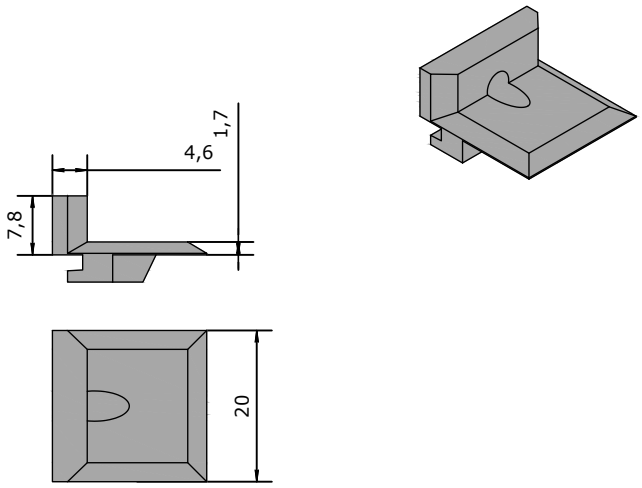

Scale 1:1

A7

Ffor-612
corner switch

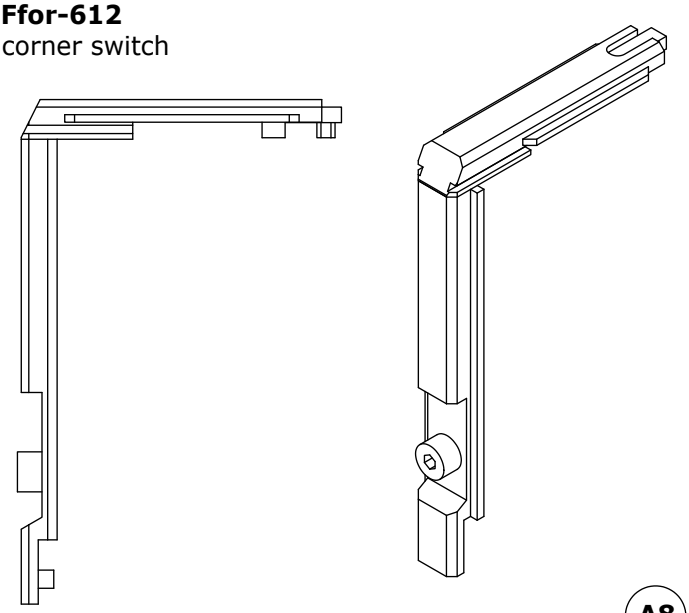

Scale 1:2

A8

Fv-514
Universal eccentric pin
(on a screw)

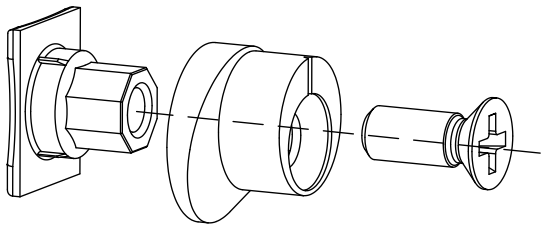

A9

Fv-505
Concealed clamp for aluminium window

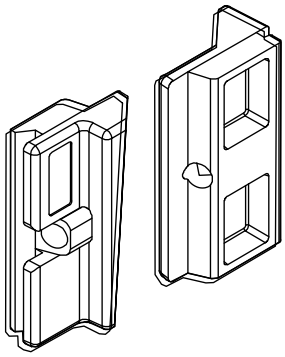

A10

Ffor-401
opening restrictor

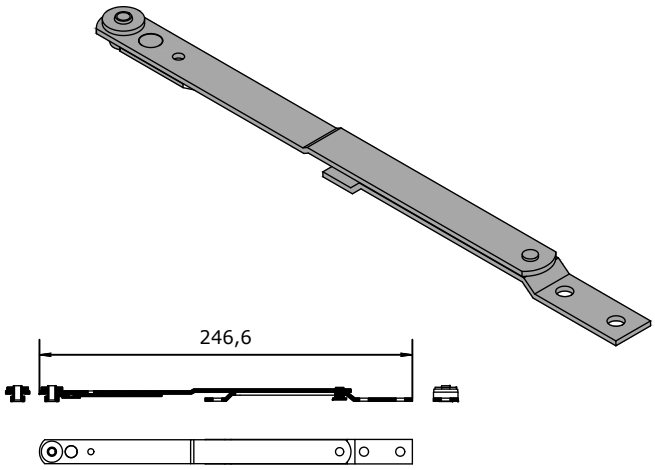

Scale 1:5

A11

contents
profiles
delivery set
profiles (1:1)
sections
glazing tables
sub-assemblies tables
fitting arrangements
additional solutions
sub-assemblies
fire-resistant structures
connections
equipment and tools

Ffor-601
3-position handle

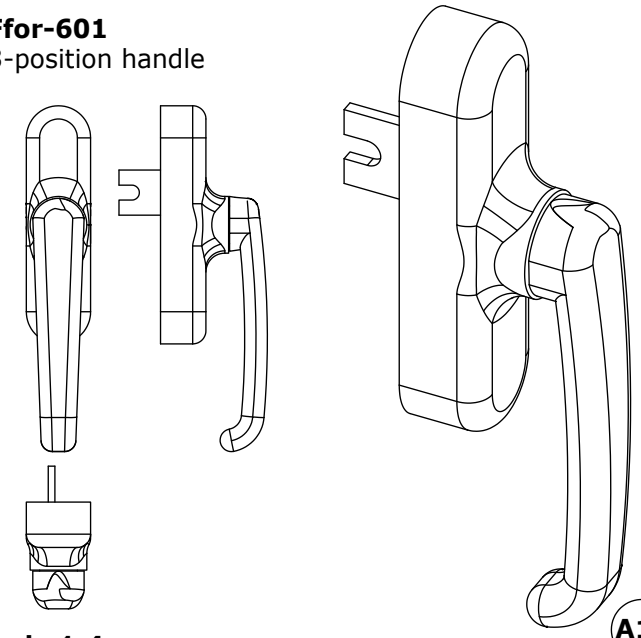

Scale 1:4

A12

Ffor-616
standard accessories for tilt & turn window

— corner switch
— central connector for 3-position handle
— faulty opening interlock
— hinged catch of tilt & turn window
— hinged catch mating plate
— catch socket
— sash lifter
— mating plates for pin (2 pcs.)

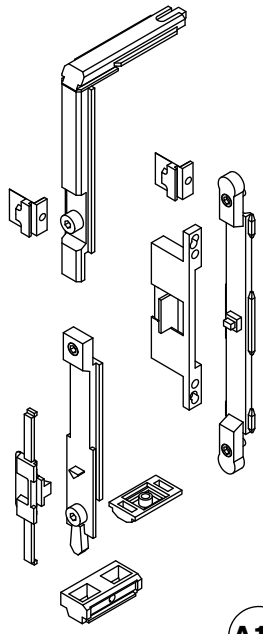

A13

Ffor-602
Central connector for 3-position handle

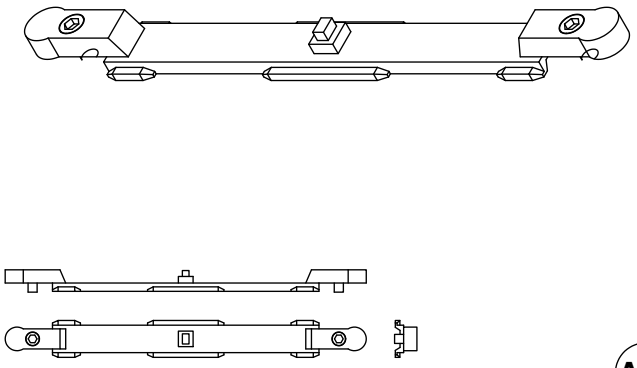

Scale 1:4

A14

Ffor-6162
additional switch for tilt & turn window

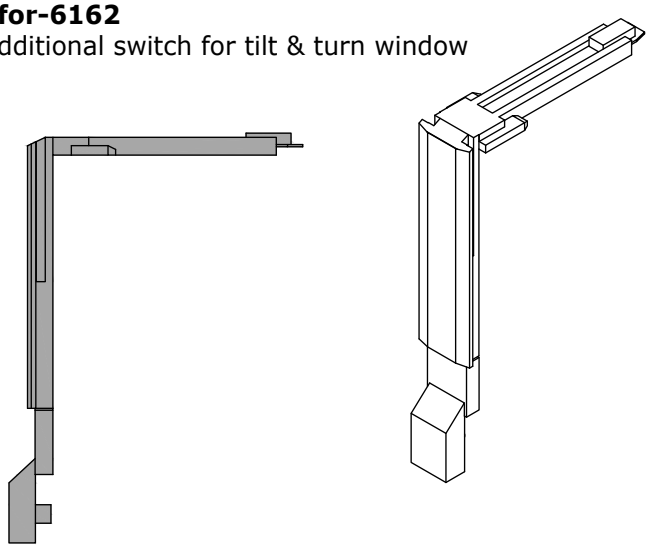

Scale 1:2

A15

Ffor-600
faulty opening interlock
(for 3-position handle)

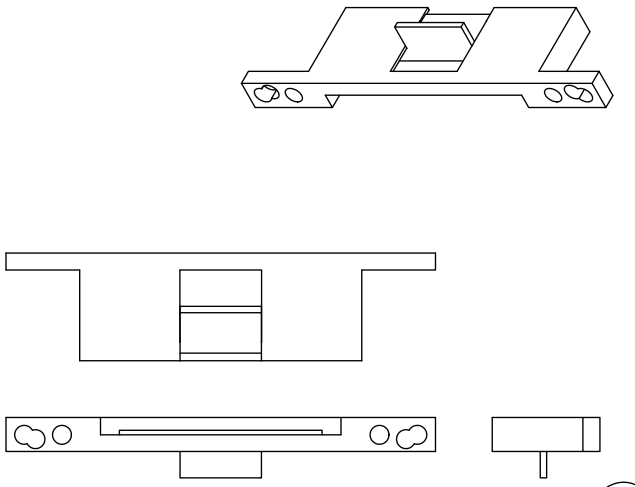

Scale 1:2

A16

Ffor-614
scissor stay GR:01 narrow — 365–675 mm

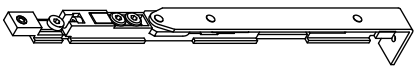

Ffor-615
scissor stay GR:02 narrow — 675–1200 mm

A17

contents
profiles
delivery set
profiles (1:1)
sections
glazing tables
sub-assemblies tables
fitting arrangements
additional solutions
sub-assemblies
fire-resistant structures
connections
equipment and tools

Ffor-6131
upper hinge group of tilt & turn window

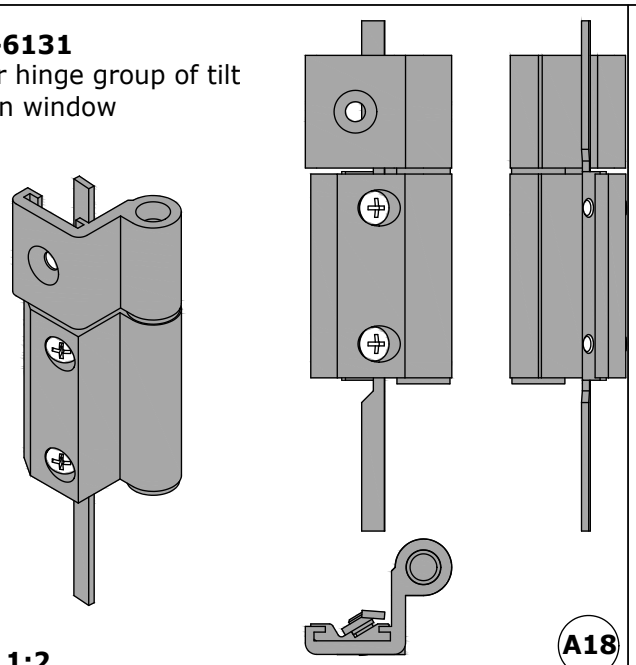

Scale 1:2

A18

Ffor-6132
lower hinge group of tilt & turn window

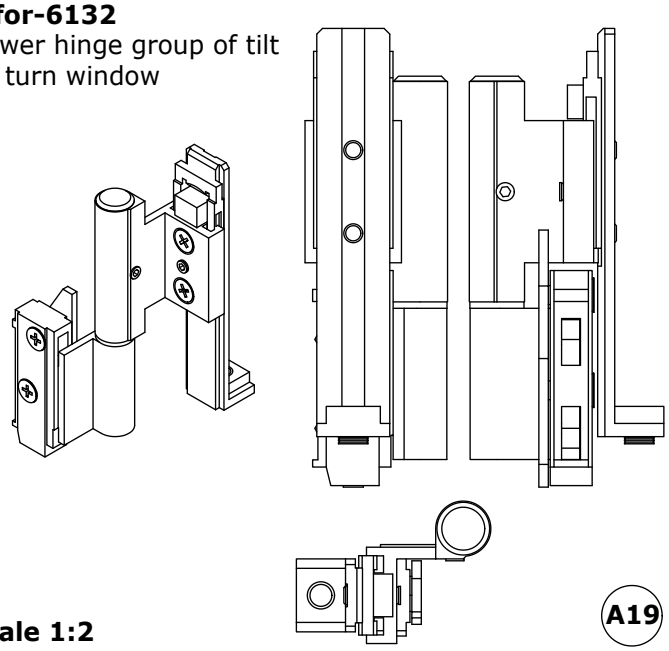

Scale 1:2

A19

contents
profiles
delivery set
profiles (1:1)
sections
glazing tables
sub-assemblies tables
fitting arrangements
additional solutions
sub-assemblies
fire-resistant structures
connections
equipment and tools

20,2

PNS-151

20,2

PNS-151

20,2

PNS-251

20,2

PNS-151

contents
profiles
delivery set
profiles (1:1)
sections
glazing tables
sub-assemblies tables
fitting arrangements
additional solutions
sub-assemblies
fire-resistant structures
connections
equipment and tools

P61-101
window frame

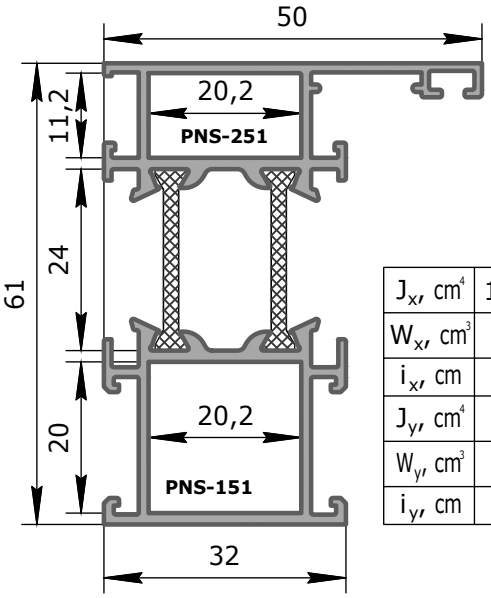

J_x, cm^4	12,65
W_x, cm^3	5,39
i_x, cm	1,91
J_y, cm^4	6,25
W_y, cm^3	1,93
i_y, cm	1,12

P61-103
medium window frame

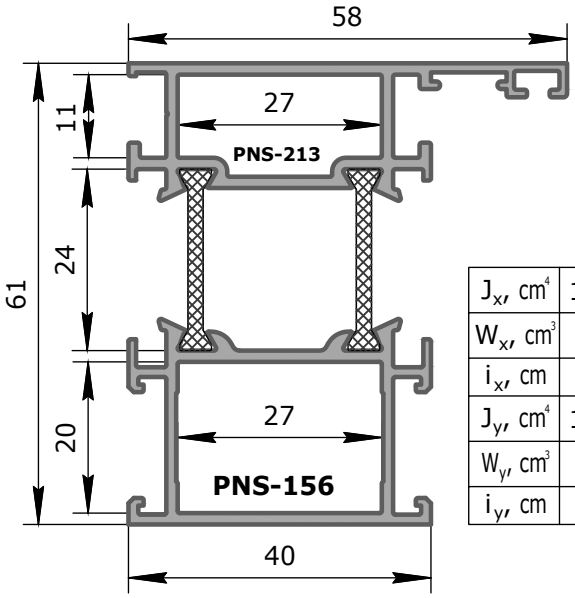

J_x, cm^4	14,95
W_x, cm^3	6,33
i_x, cm	1,96
J_y, cm^4	11,07
W_y, cm^3	3,06
i_y, cm	1,41

P61-102
facade window frame

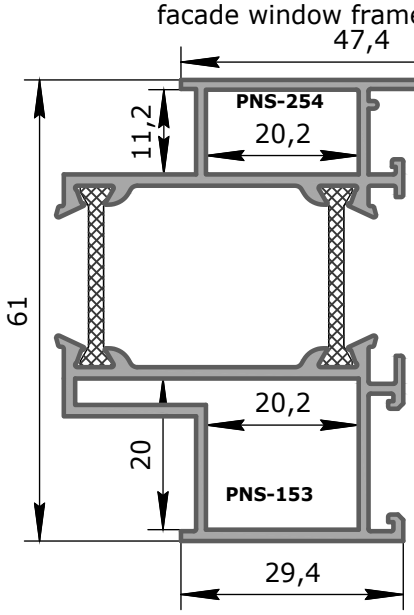

J_x, cm^4	12,72
W_x, cm^3	5,49
i_x, cm	1,84
J_y, cm^4	13,44
W_y, cm^3	3,59
i_y, cm	1,59

P61-403-69
window sash impost

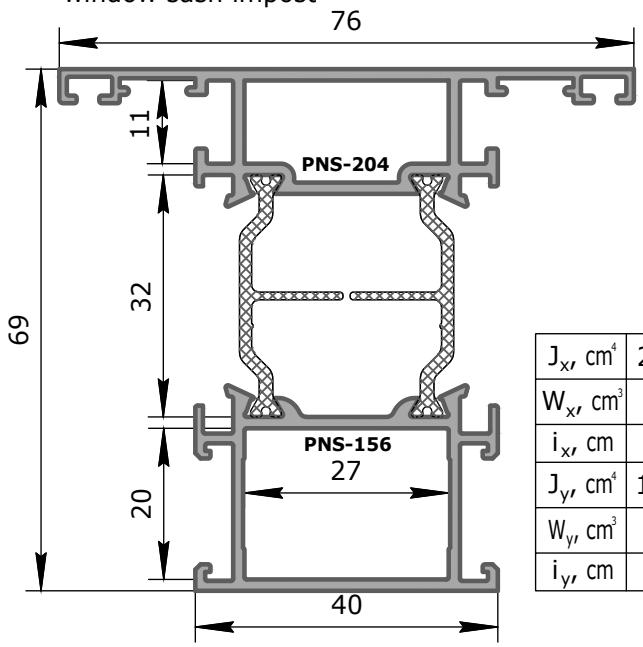

J_x, cm^4	23,04
W_x, cm^3	8,33
i_x, cm	2,27
J_y, cm^4	15,11
W_y, cm^3	3,98
i_y, cm	1,54

P61-401
impost

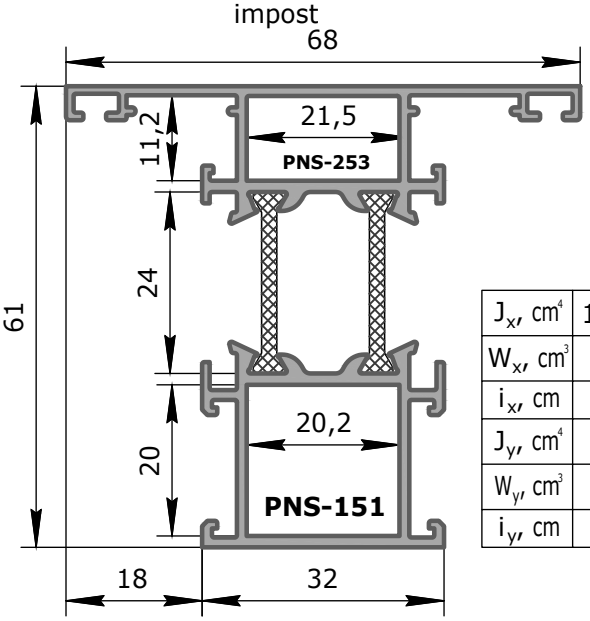

J_x, cm^4	14,06
W_x, cm^3	5,72
i_x, cm	1,95
J_y, cm^4	6,62
W_y, cm^3	2,54
i_y, cm	1,28

P61-403
medium impost

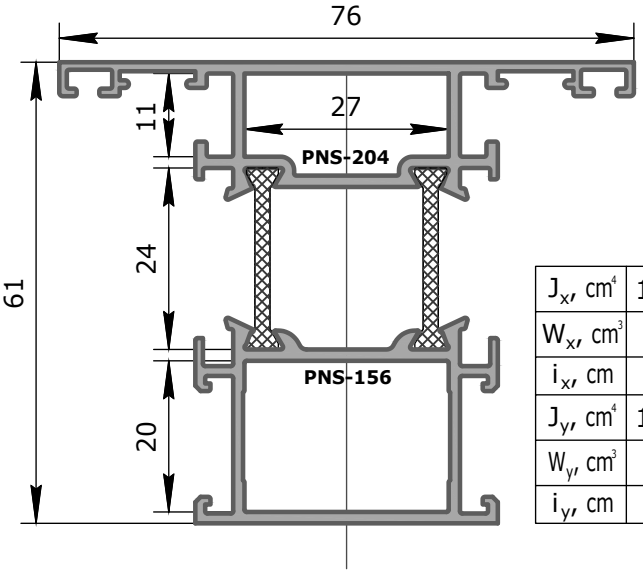

J_x, cm^4	16,51
W_x, cm^3	6,68
i_x, cm	1,99
J_y, cm^4	14,37
W_y, cm^3	3,78
i_y, cm	1,56

contents
profiles
delivery set
profiles (1:1)
sections
glazing tables
sub-assemblies tables
fitting arrangements
additional solutions
sub-assemblies
fire-resistant structures
connections
equipment and tools

P61-202
Window sash
— PVC groove

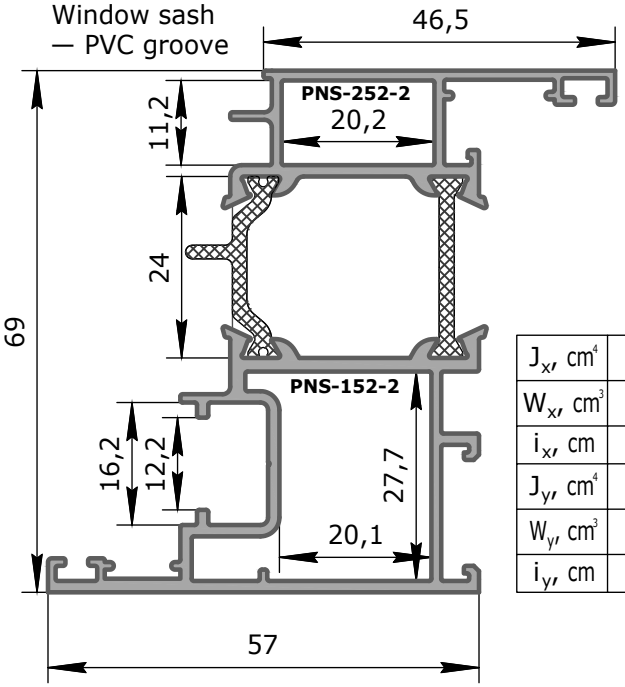

J_x, cm^4	22,6
W_x, cm^3	9,35
i_x, cm	2,25
J_y, cm^4	15,2
W_y, cm^3	4,02
i_y, cm	1,54

P61-452
inward-reinforced impost 120 mm

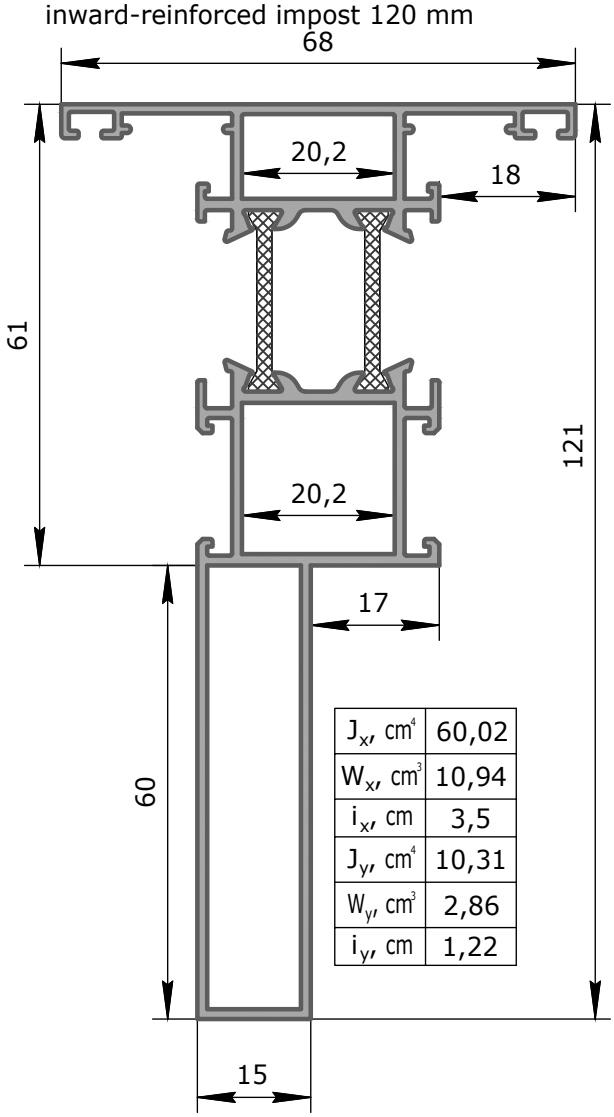

J_x, cm^4	60,02
W_x, cm^3	10,94
i_x, cm	3,5
J_y, cm^4	10,31
W_y, cm^3	2,86
i_y, cm	1,22

P61-203
Window sash
— ALU groove

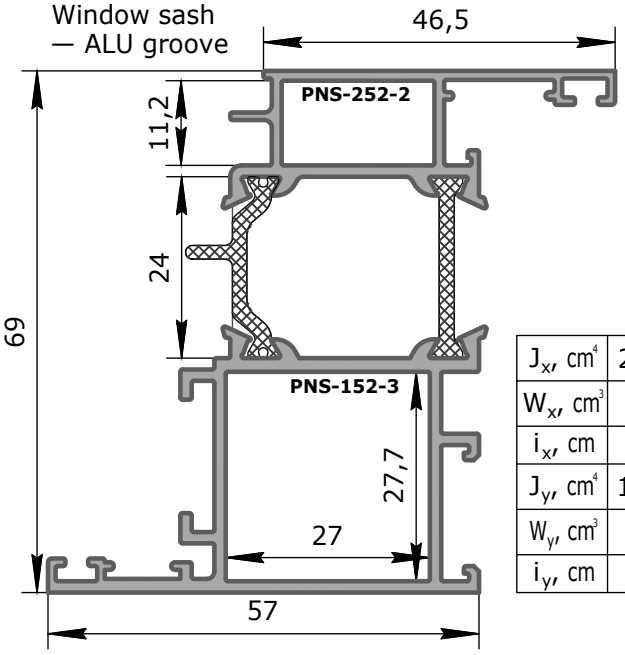

J_x, cm^4	22,54
W_x, cm^3	9,32
i_x, cm	2,25
J_y, cm^4	15,74
W_y, cm^3	4,17
i_y, cm	1,57

P61-002-2
corner frame adapter

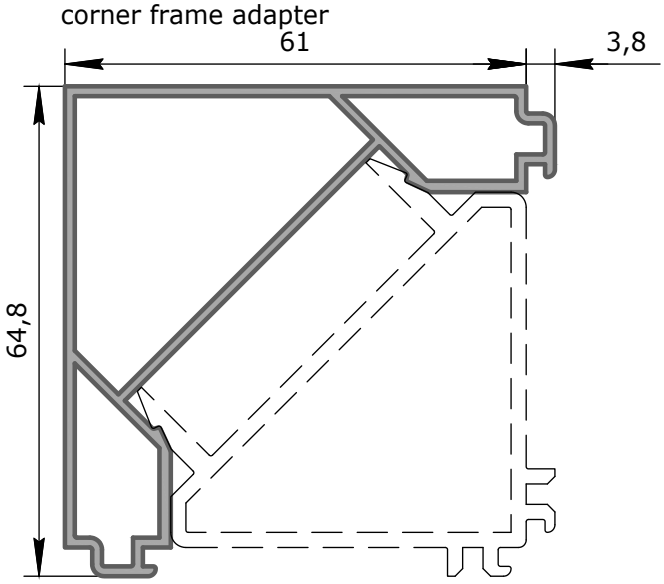

P61-015-2
corner stained-glass adapter

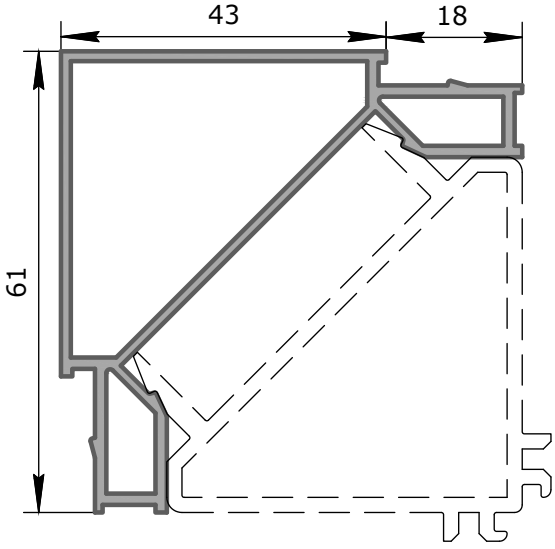

20,2

contents
profiles
delivery set
profiles (1:1)
sections
glazing tables
sub-assemblies tables
fitting arrangements
additional solutions
sub-assemblies
fire-resistant structures
connections
equipment and tools

P61-301
mullion 99 mm

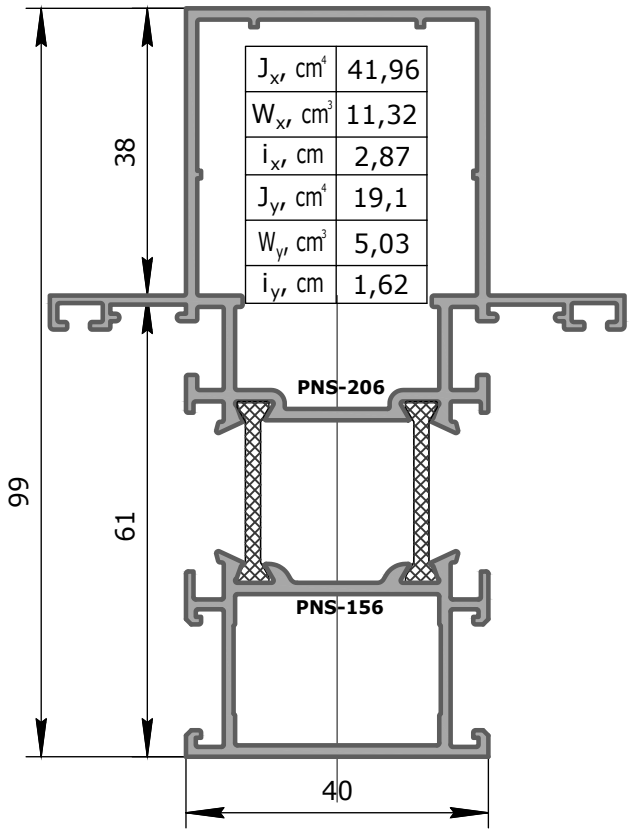

J_x, cm^4	41,96
W_x, cm^3	11,32
i_x, cm	2,87
J_y, cm^4	19,1
W_y, cm^3	5,03
i_y, cm	1,62

P61-321
mullion 99 mm single-arm

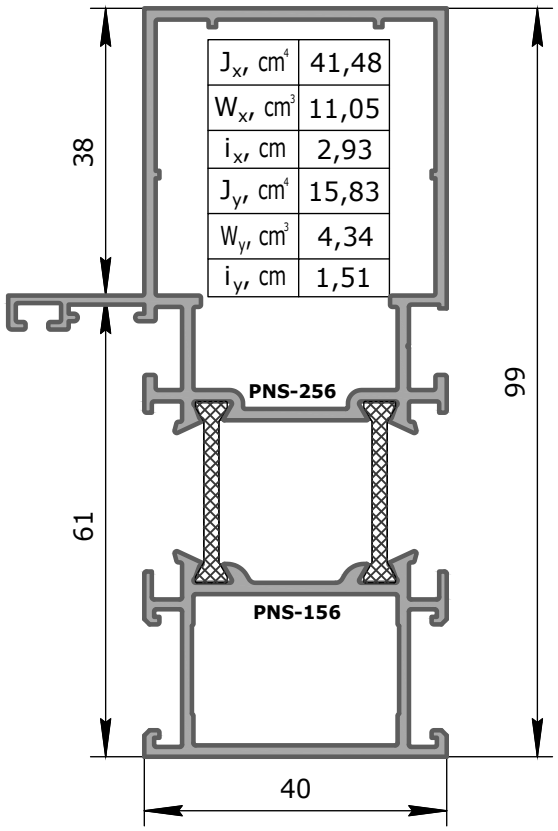

J_x, cm^4	41,48
W_x, cm^3	11,05
i_x, cm	2,93
J_y, cm^4	15,83
W_y, cm^3	4,34
i_y, cm	1,51

P61-302
mullion 114 mm

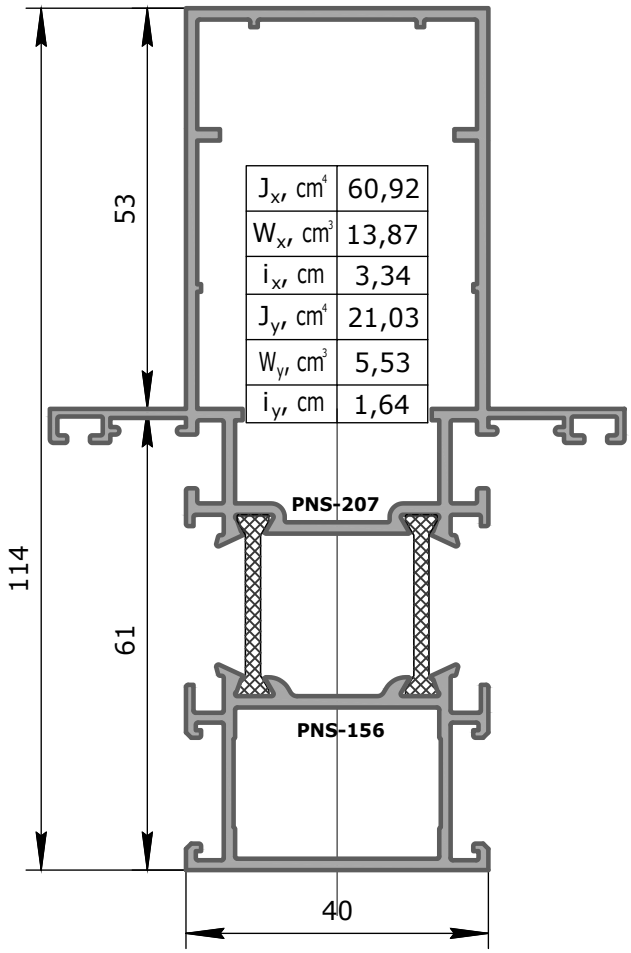

J_x, cm^4	60,92
W_x, cm^3	13,87
i_x, cm	3,34
J_y, cm^4	21,03
W_y, cm^3	5,53
i_y, cm	1,64

P61-322
mullion 114 mm single-arm

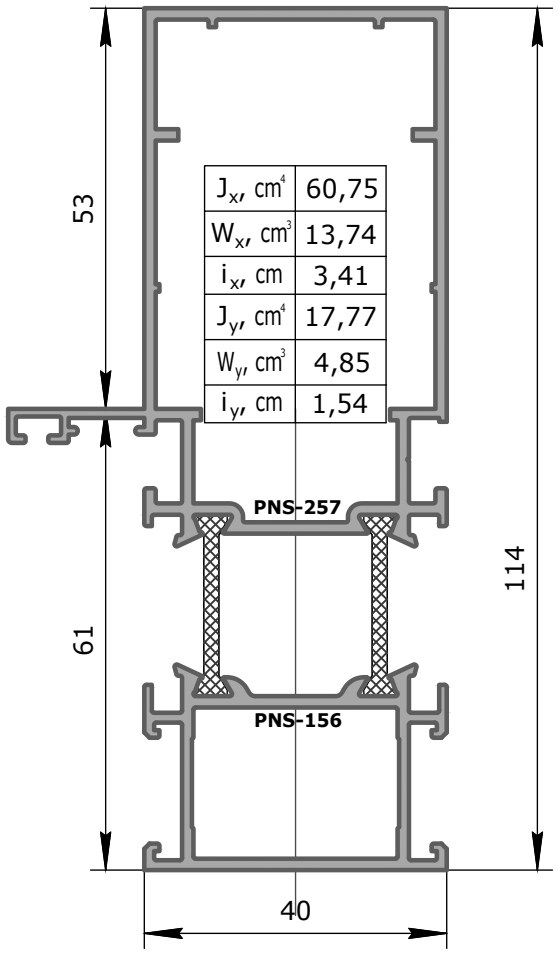

J_x, cm^4	60,75
W_x, cm^3	13,74
i_x, cm	3,41
J_y, cm^4	17,77
W_y, cm^3	4,85
i_y, cm	1,54

contents
profiles
delivery set
profiles (1:1)
sections
glazing tables
sub-assemblies tables
fitting arrangements
additional solutions
sub-assemblies
fire-resistant structures
connections
equipment and tools

P61-004
angled mullion adapter 45°

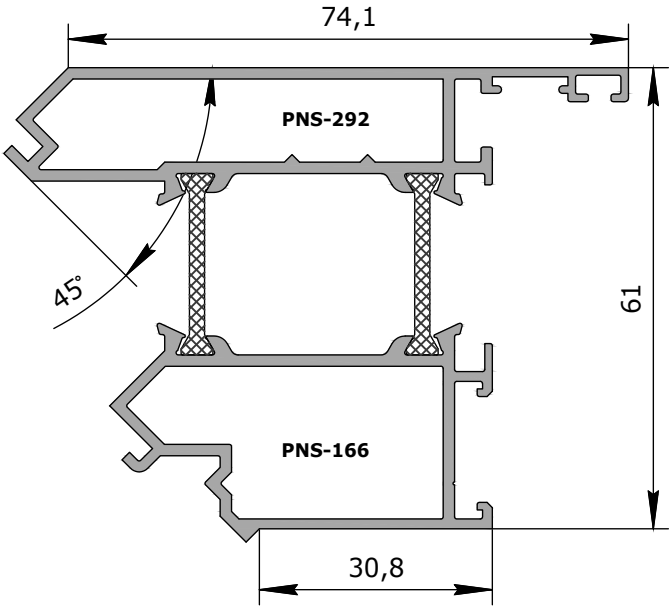

P61-404
impost extender for valve installation

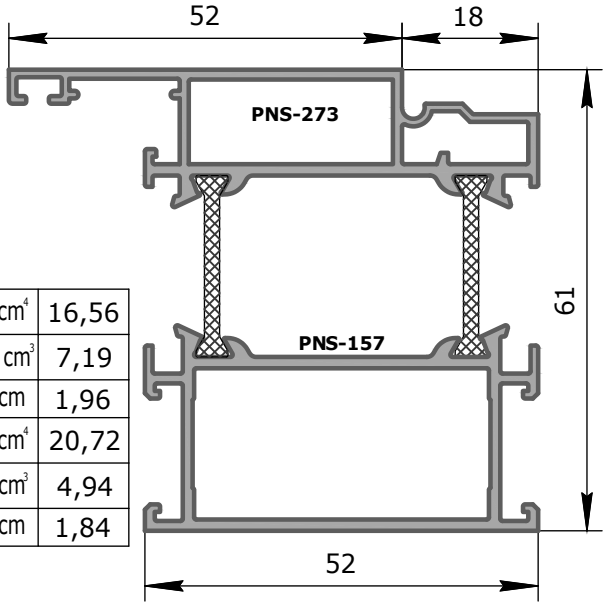

J_x, cm^4	16,56
W_x, cm^3	7,19
i_x, cm	1,96
J_y, cm^4	20,72
W_y, cm^3	4,94
i_y, cm	1,84

P61-303
mullion 134 mm

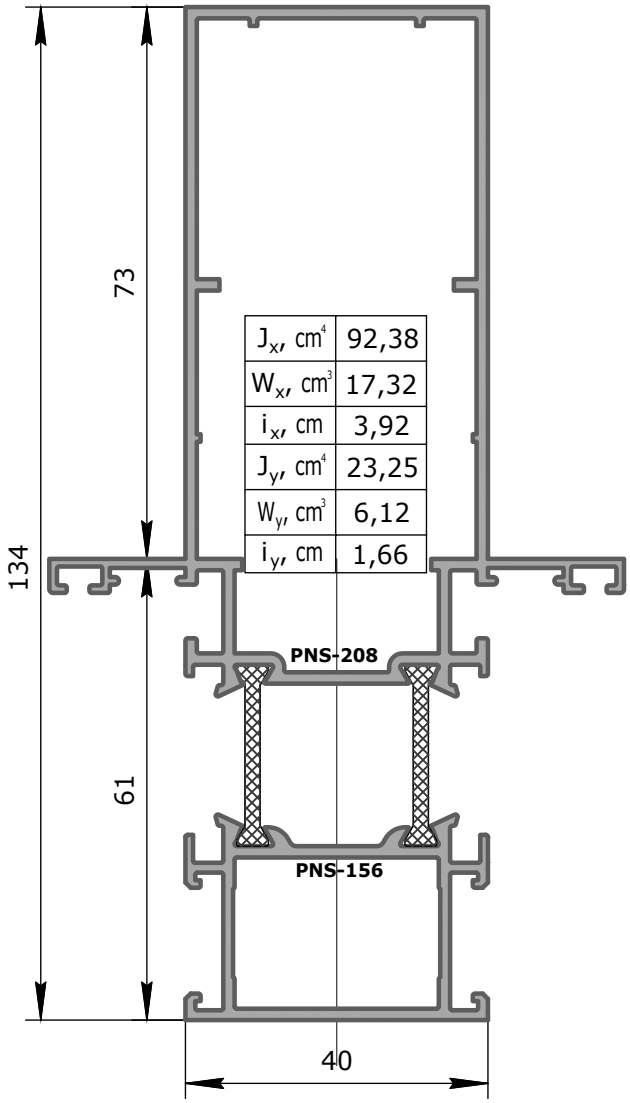

J_x, cm^4	92,38
W_x, cm^3	17,32
i_x, cm	3,92
J_y, cm^4	23,25
W_y, cm^3	6,12
i_y, cm	1,66

P61-323*
mullion 134 mm
single-arm

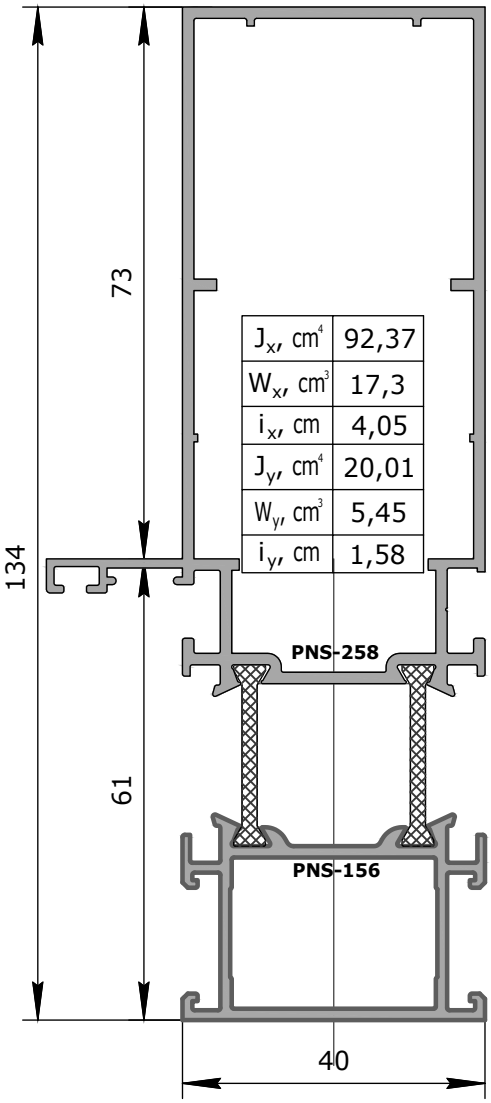

J_x, cm^4	92,37
W_x, cm^3	17,3
i_x, cm	4,05
J_y, cm^4	20,01
W_y, cm^3	5,45
i_y, cm	1,58

*** – delivery period 8–10 weeks**

contents
profiles
delivery set
profiles (1:1)
sections
glazing tables
sub-assemblies tables
fitting arrangements
additional solutions
sub-assemblies
fire-resistant structures
connections
equipment and tools

P61-304
mullion 164 mm

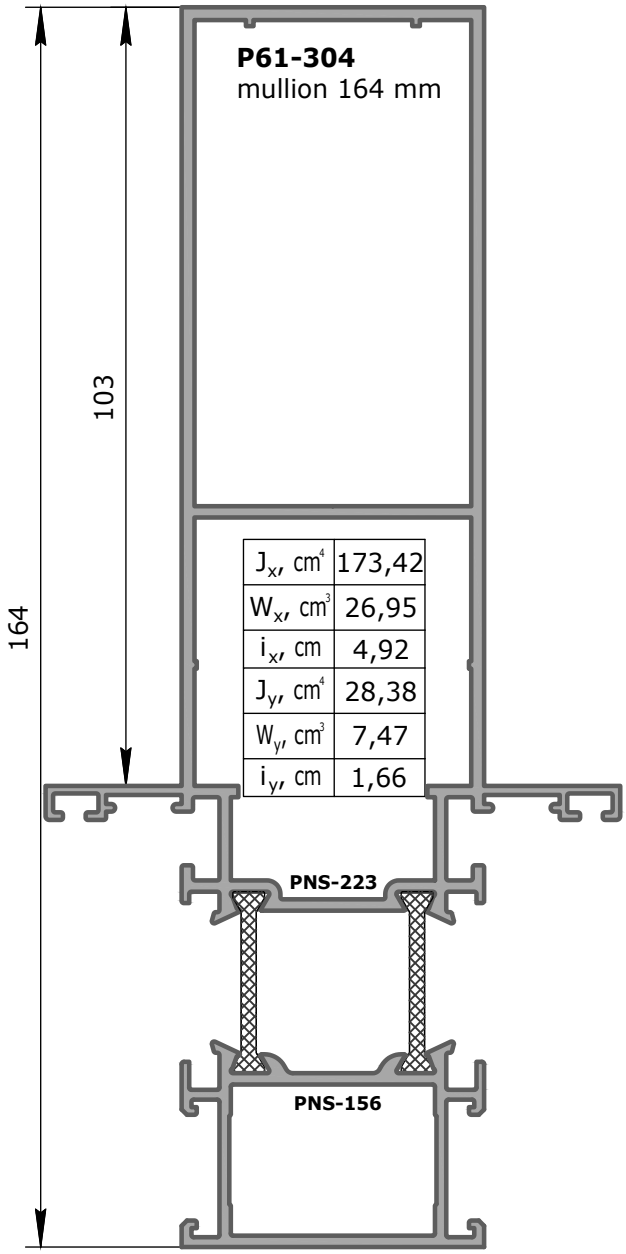

J_x, cm^4	173,42
W_x, cm^3	26,95
i_x, cm	4,92
J_y, cm^4	28,38
W_y, cm^3	7,47
i_y, cm	1,66

P61-212
Base 100 mm

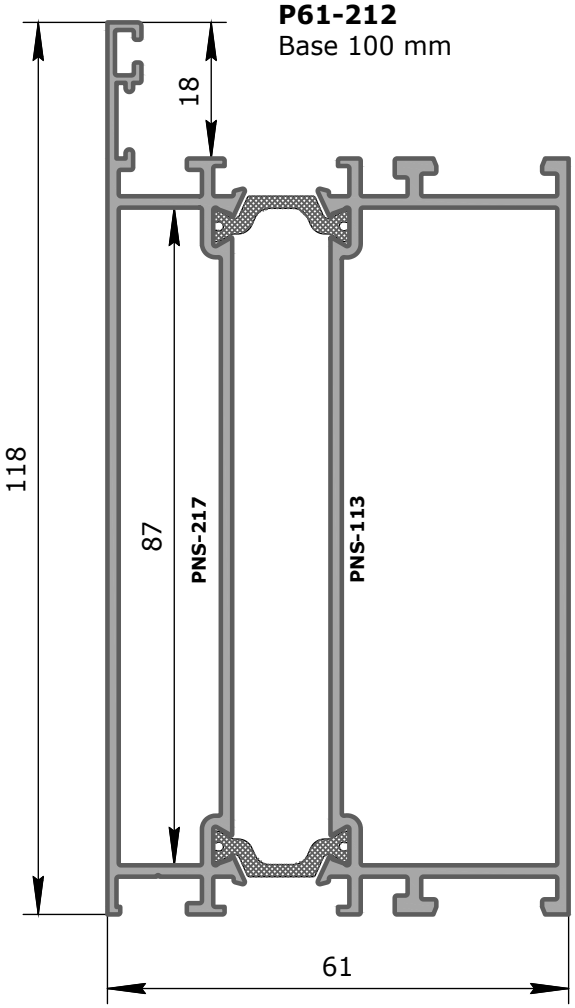

P61-003
Swivel adapter

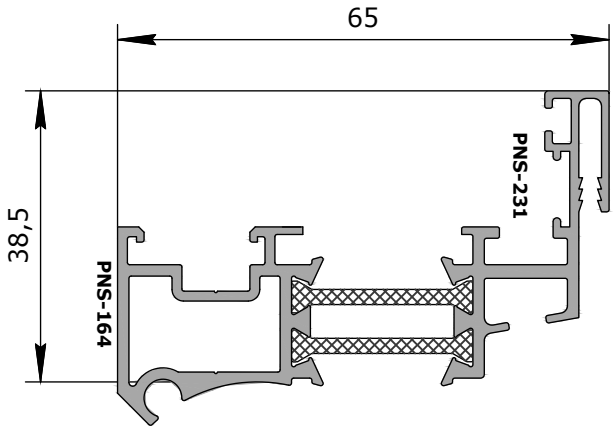

P00-037-611*
internal angle swivel

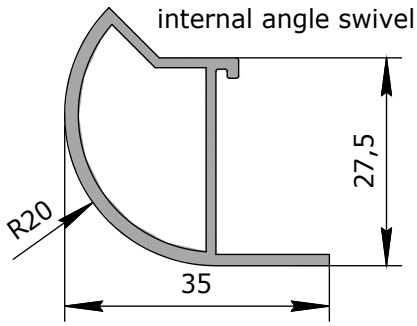

P00-037-612*
external angle swivel

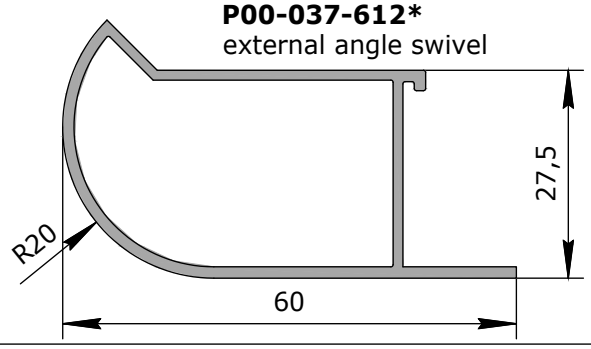

P00-082-01*

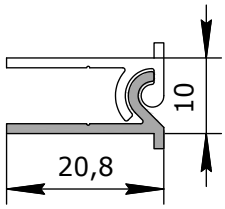

P00-082-02*

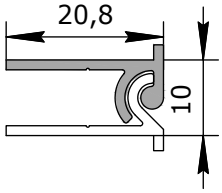

contents
profiles
delivery set
profiles (1:1)
sections
glazing tables
sub-assemblies tables
fitting arrangements
additional solutions
sub-assemblies
fire-resistant structures
connections
equipment and tools

P61-171
outward opening door frame

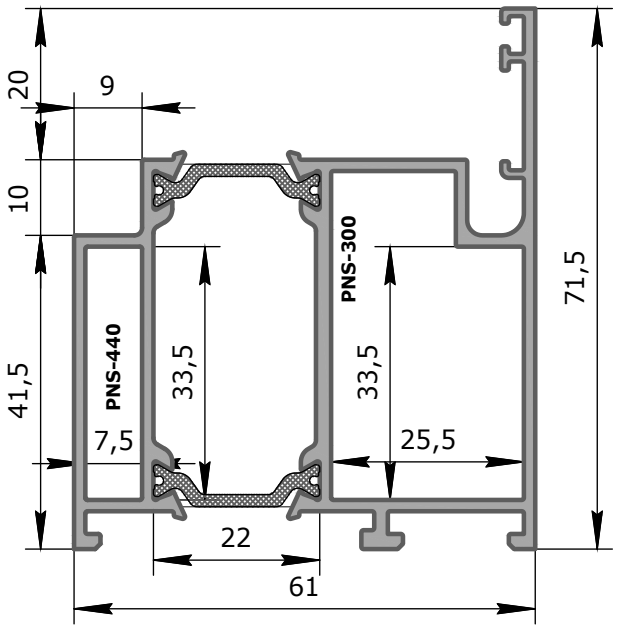

P61-172
inward opening door frame

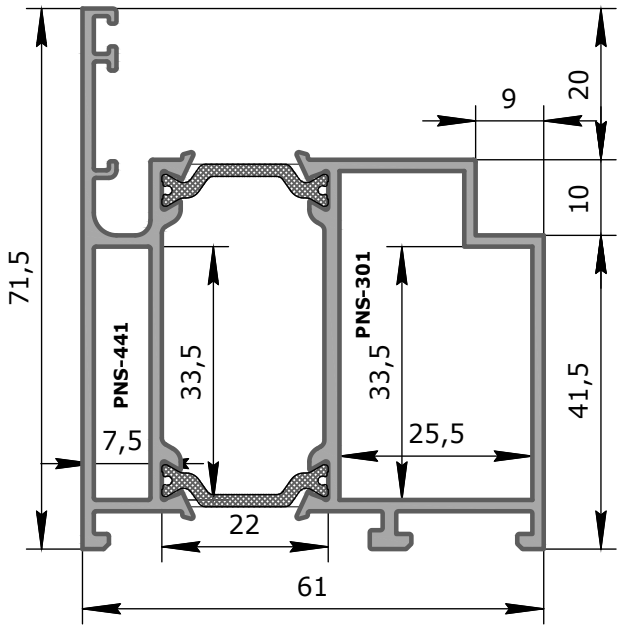

P61-271
T-shaped door leaf

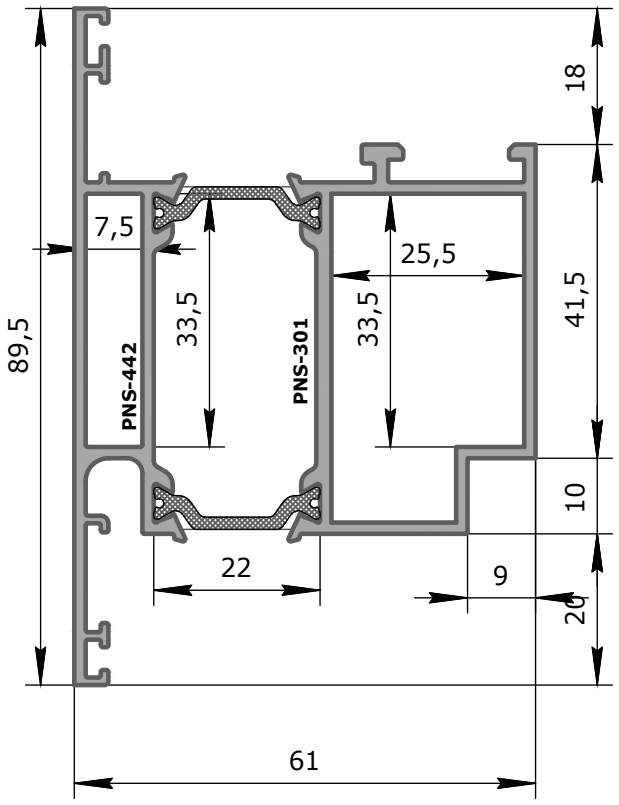

P61-272
Z-shaped door leaf

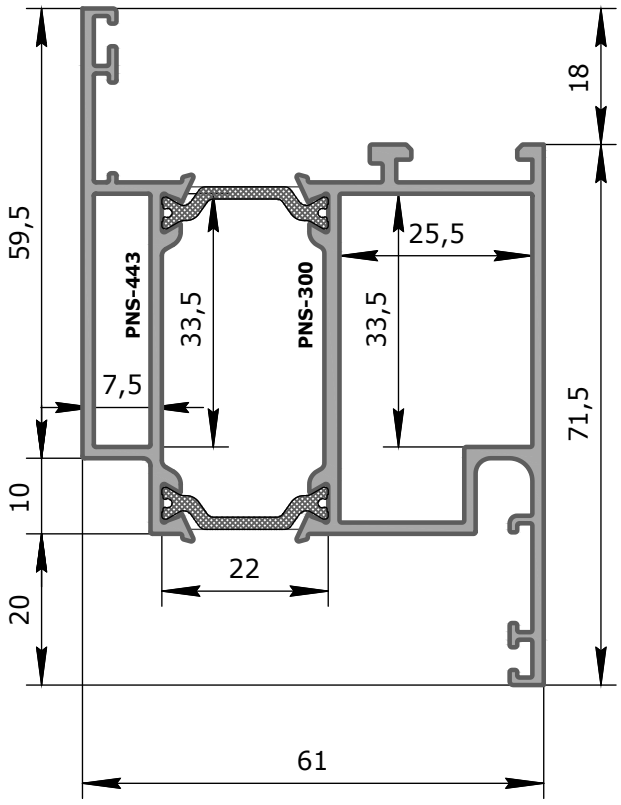

contents
profiles
delivery set
profiles (1:1)
sections
glazing tables
sub-assemblies tables
fitting arrangements
additional solutions
sub-assemblies
fire-resistant structures
connections
equipment and tools

P61-173
outward opening
stained-glass door frame

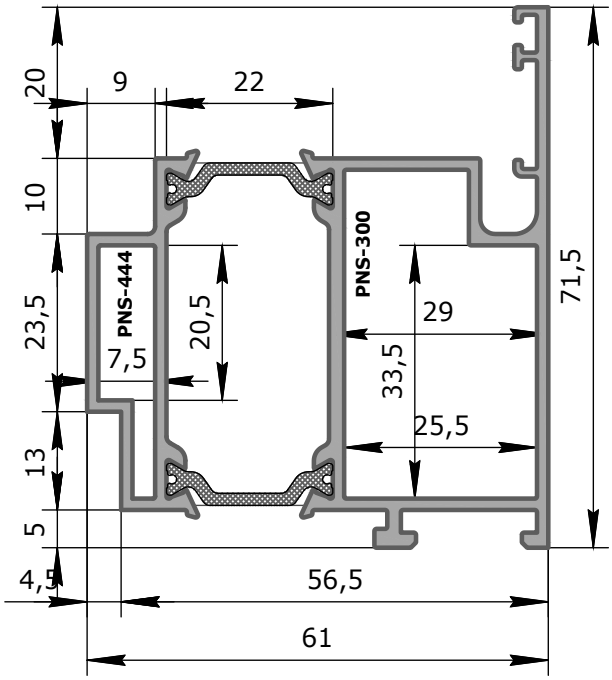

P61-174
inward opening
stained-glass door frame

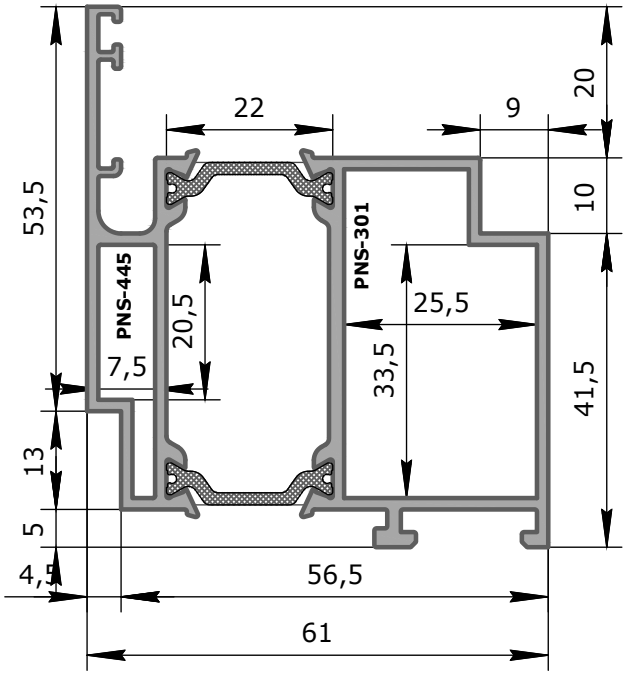

P61-014
Door sill 20 mm

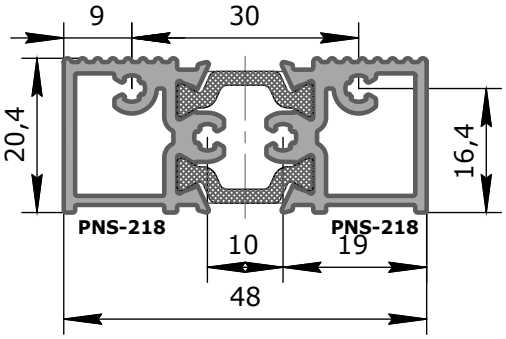

P61-405
Impost expander 68 mm

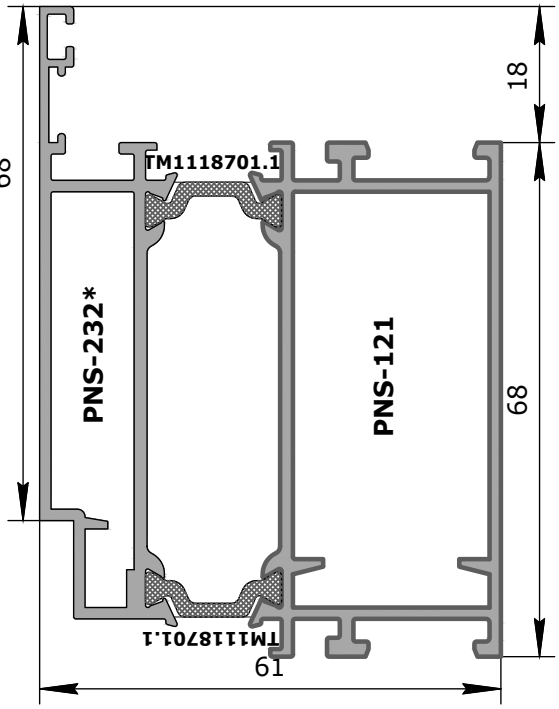

P61-014-2
Door sill 40 mm

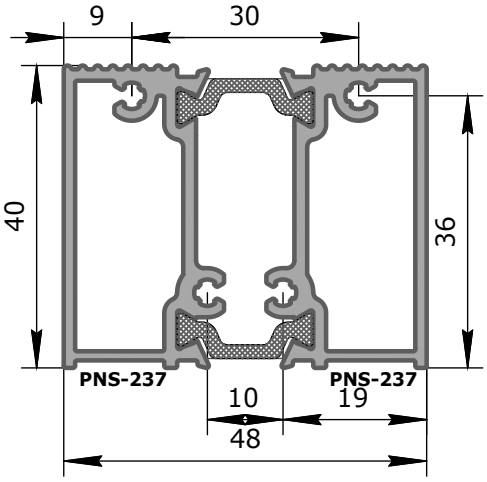

*** — delivery period 8–10 weeks**

contents
profiles
delivery set
profiles (1:1)
sections
glazing tables
sub-assemblies tables
fitting arrangements
additional solutions
sub-assemblies
fire-resistant structures
connections
equipment and tools

P61-216
ventilation sash 100 mm

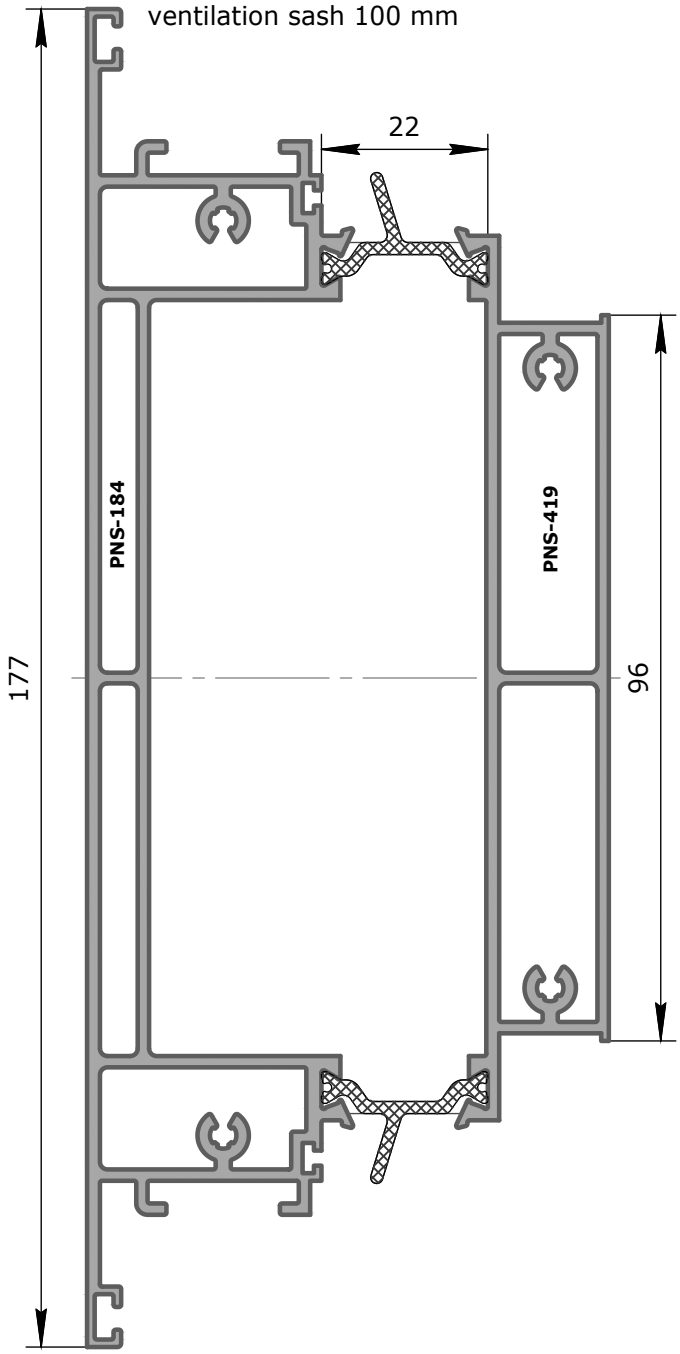

P61-217
ventilation sash adapter

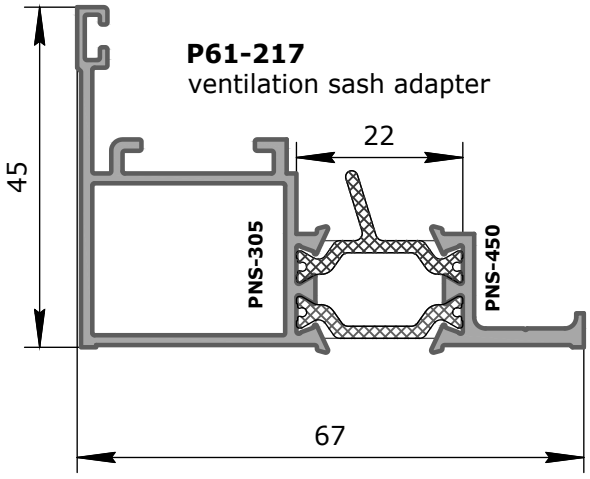

P00-029-2

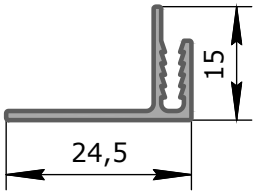

P00-001

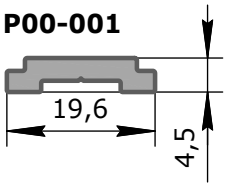

P00-002
sash drip cap

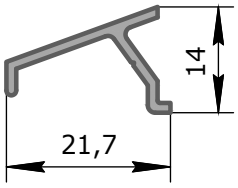

P00-030
adapter

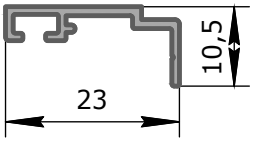

P00-035

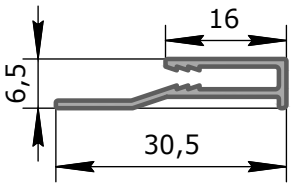

P00-031

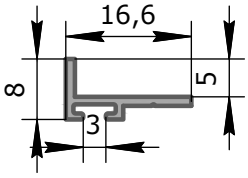

P00-044

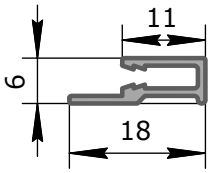

P00-094

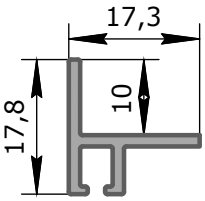

P00-019

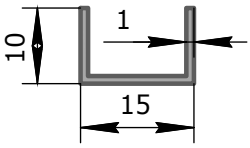

P00-009

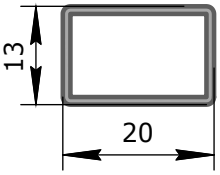

P00-100-40
internal window sill 40 mm

P00-530
external glazing bead cover

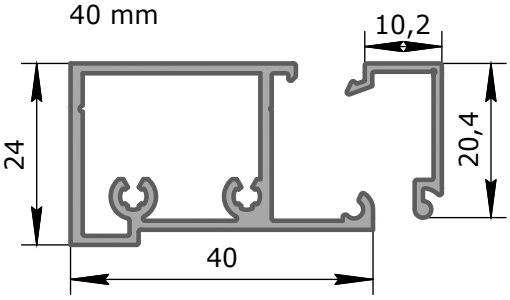

P00-095-2*
frame retainer in facade

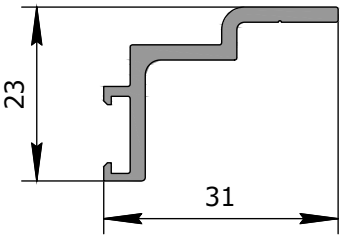

*** — delivery period 8–10 weeks**

contents
profiles
delivery set
profiles (1:1)
sections
glazing tables
sub-assemblies tables
fitting arrangements
additional solutions
sub-assemblies
fire-resistant structures
connections
equipment and tools

contents
profiles
delivery set
profiles (1:1)
sections
glazing tables
sub-assemblies tables
fitting arrangements
additional solutions
sub-assemblies
fire-resistant structures
connections
equipment and tools

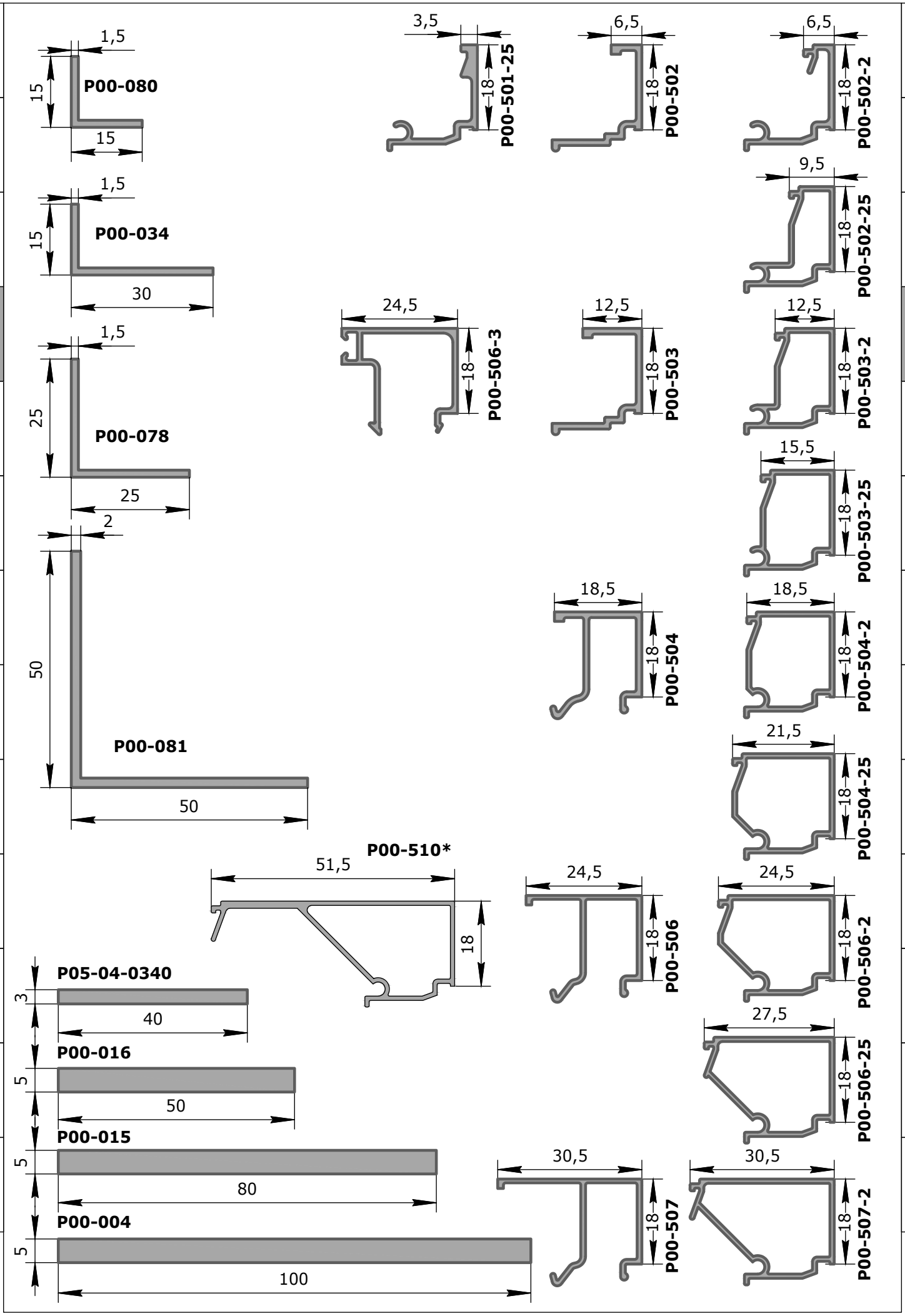

contents
profiles
delivery set
profiles (1:1)
sections
glazing tables
sub-assemblies tables
fitting arrangements
additional solutions
sub-assemblies
fire-resistant structures
connections
equipment and tools

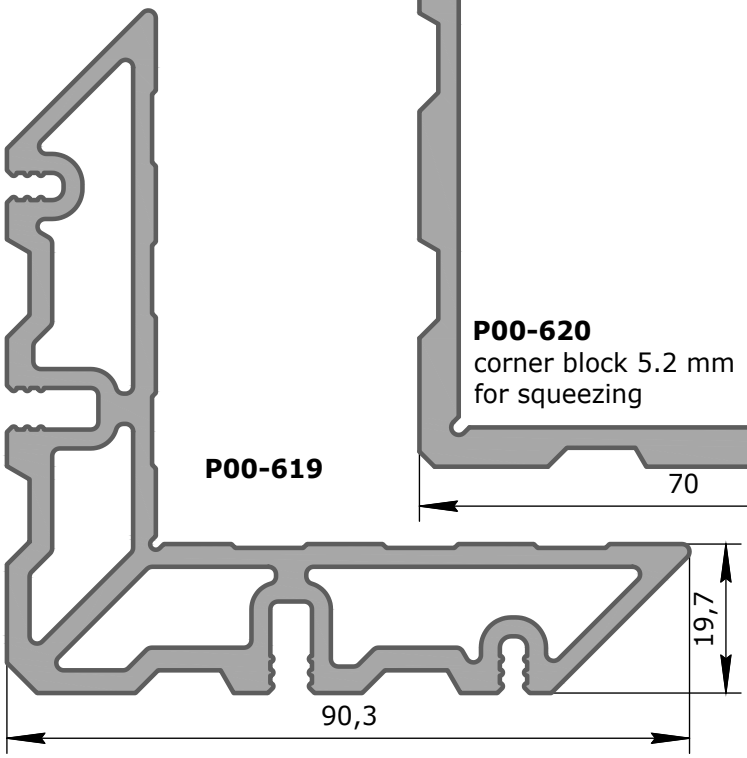

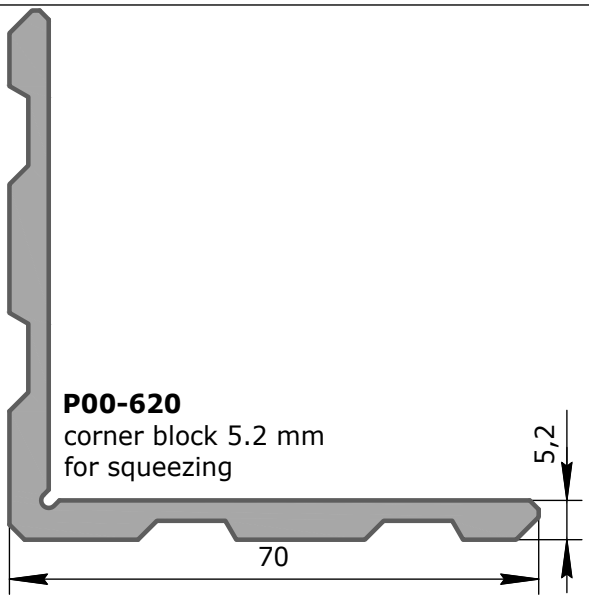

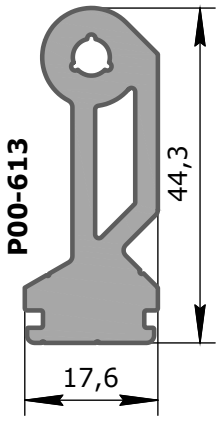

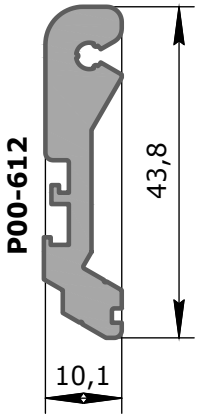

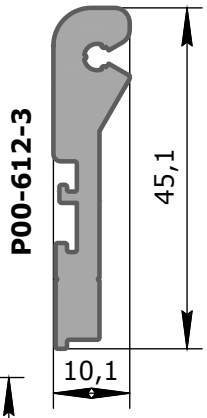

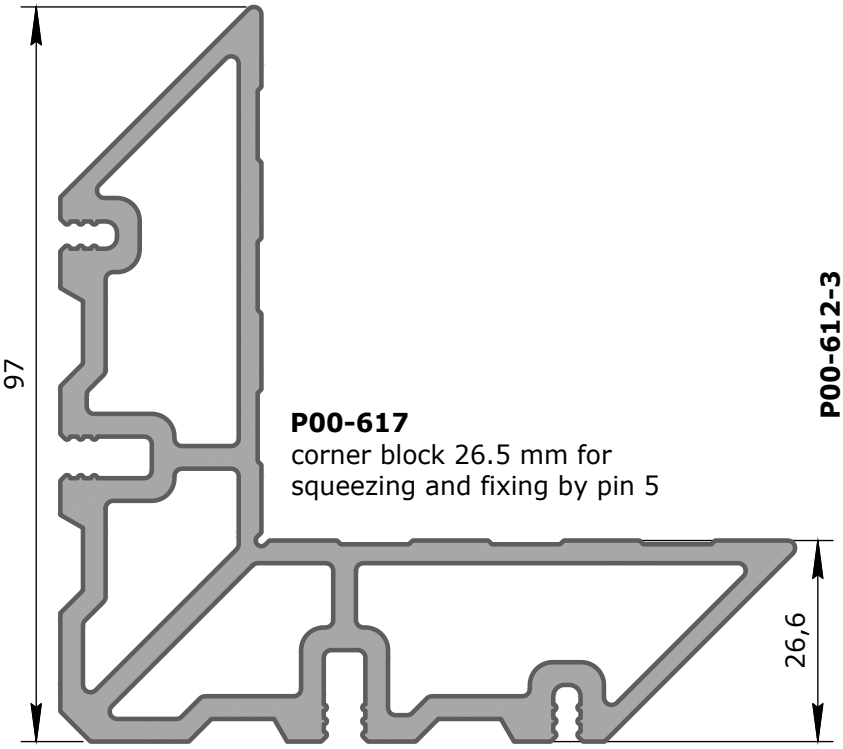

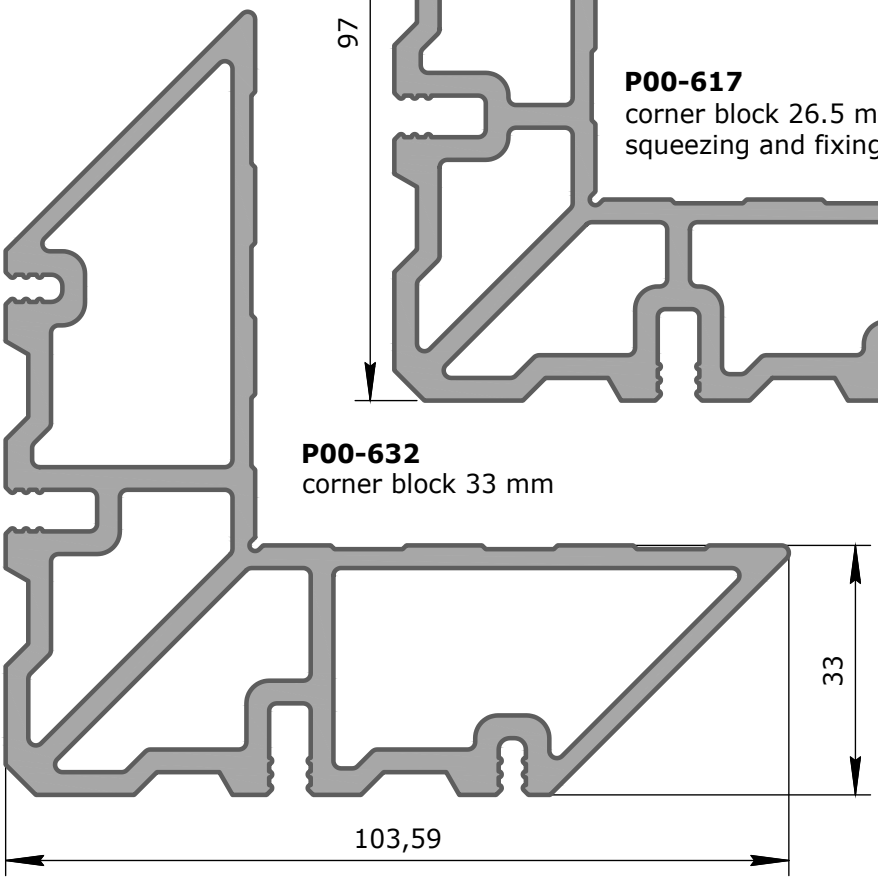

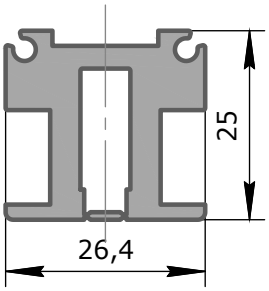

contents
profiles
delivery set
profiles (1:1)
sections
glazing tables
sub-assemblies tables
fitting arrangements
additional solutions
sub-assemblies
fire-resistant structures
connections
equipment and tools

contents
profiles
delivery set
profiles (1:1)
sections
glazing tables
sub-assemblies tables
fitting arrangements
additional solutions
sub-assemblies
fire-resistant structures
connections
equipment and tools

P00-079-11
outermost screen housing

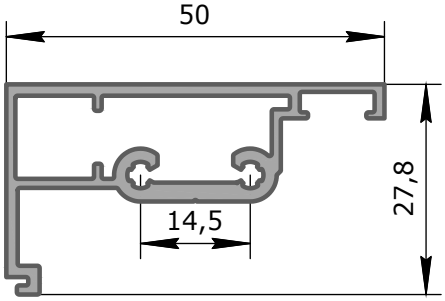

P00-079-12
central screen housing

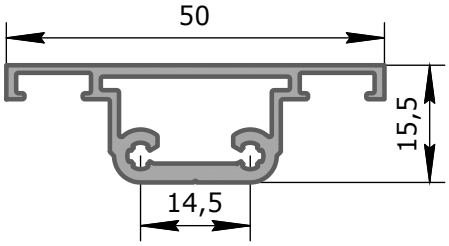

P00-079-01
screen cover

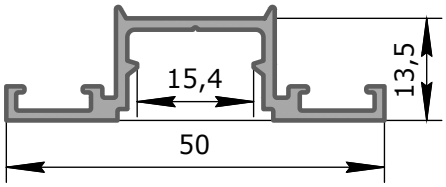

P00-062
cap

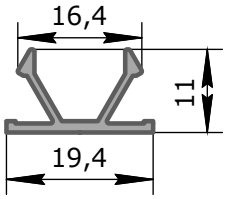

P00-079-13
outermost screen housing offset 80 mm

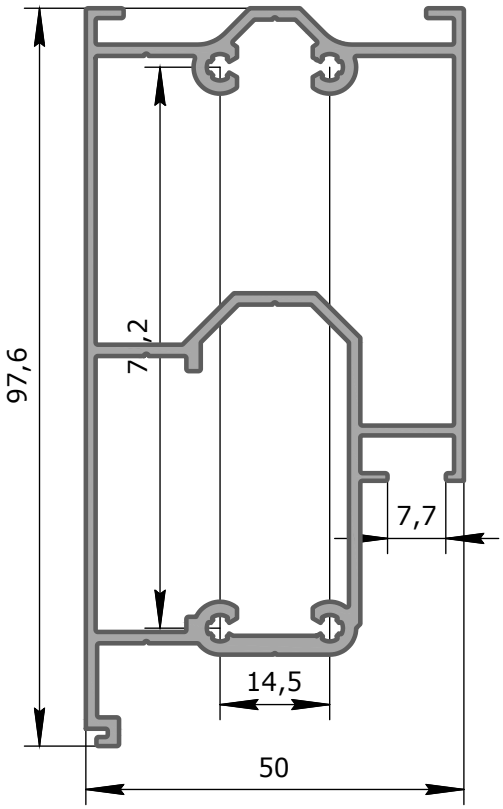

P00-079-14
central screen housing offset 80 mm

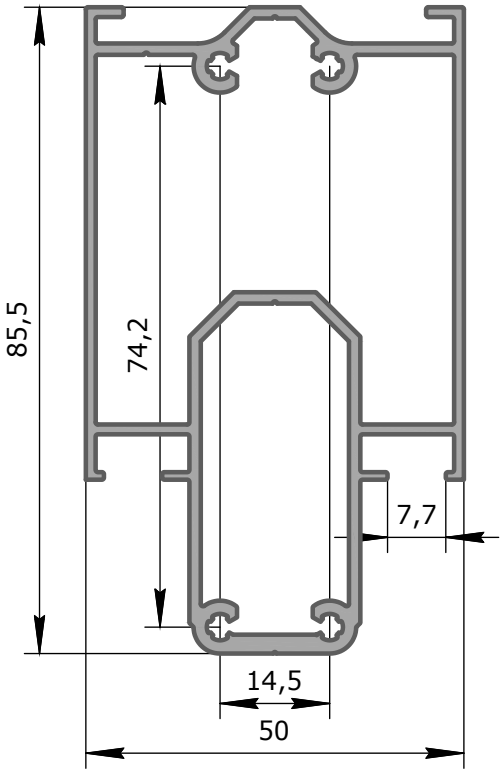

contents
profiles
delivery set
profiles (1:1)
sections
glazing tables
sub-assemblies tables
fitting arrangements
additional solutions
sub-assemblies
fire-resistant structures
connections
equipment and tools

contents
profiles
delivery set
profiles (1:1)
sections
glazing tables
sub-assemblies tables
fitting arrangements
additional solutions
sub-assemblies
fire-resistant structures
connections
equipment and tools

P00-033
circular pipe 55 x 2

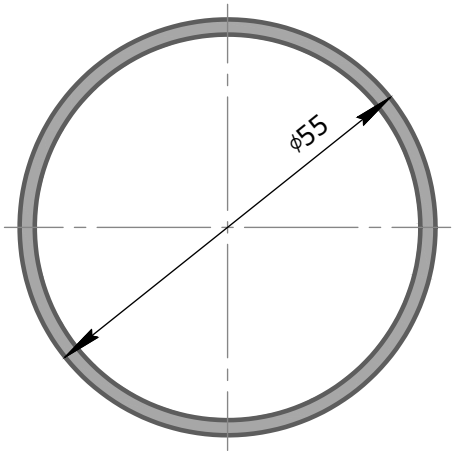

P00-032
pipe holder 55 mm

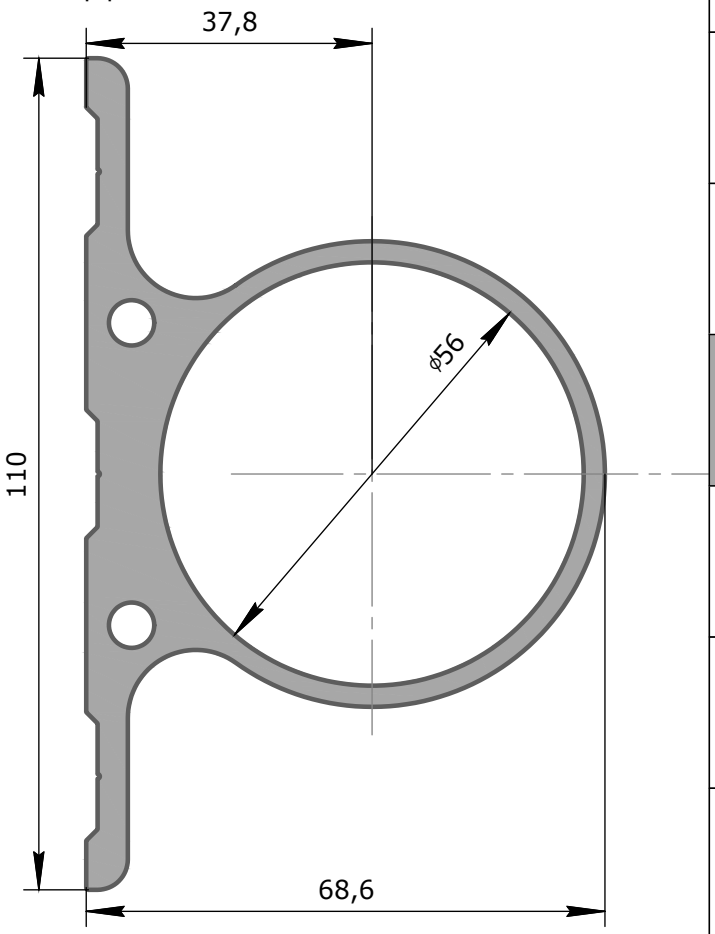

P05-02-3525015

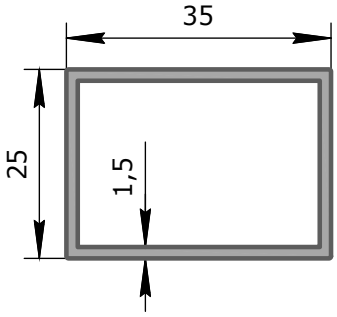

P05-02-353502

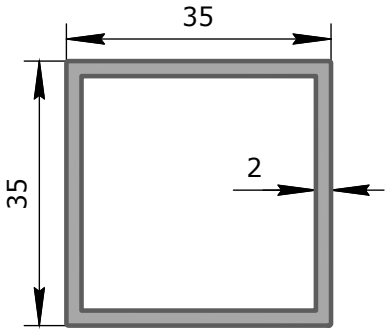

P00-020

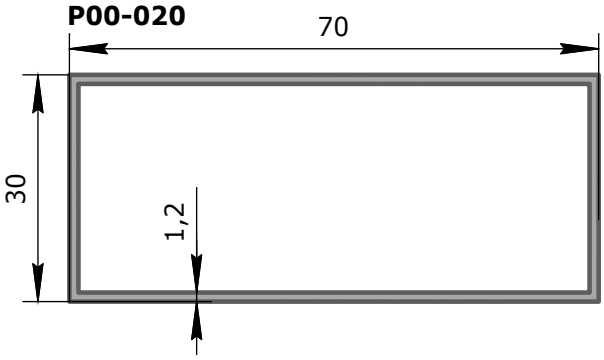

P00-003-2

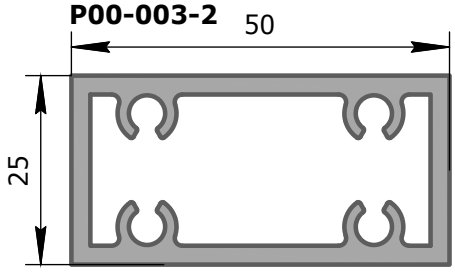

P00-041

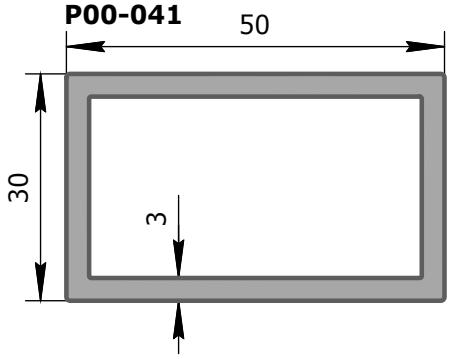

P05-02-604020

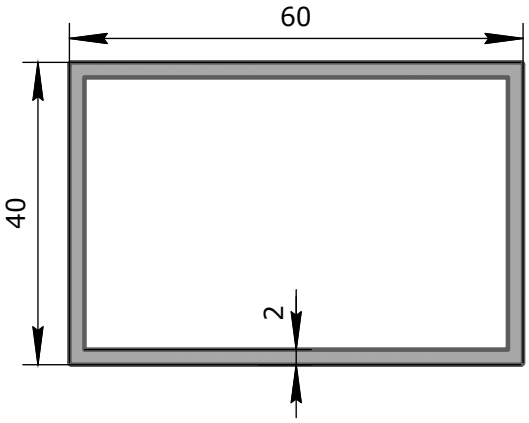

contents
profiles
delivery set
profiles (1:1)
sections
glazing tables
sub-assemblies tables
fitting arrangements
additional solutions
sub-assemblies
fire-resistant structures
connections
equipment and tools

contents
profiles
delivery set
profiles (1:1)
sections
glazing tables
sub-assemblies tables
fitting arrangements
additional solutions
sub-assemblies
fire-resistant structures
connections
equipment and tools

P24-012

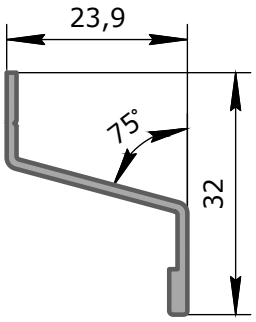

P00-023

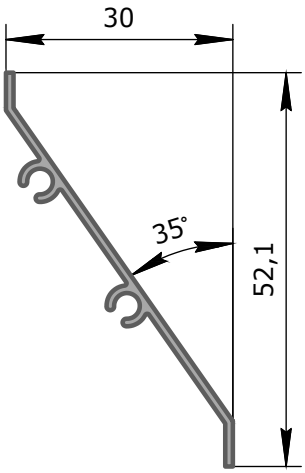

P30-001

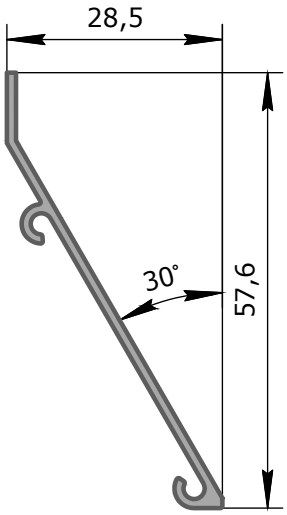

P30-002

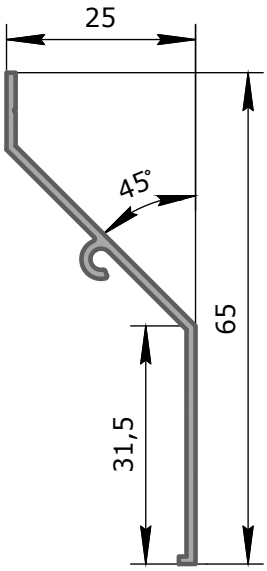

P30-101

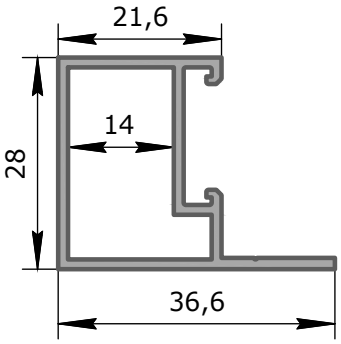

P30-102

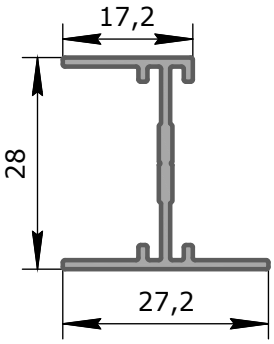

P30-301

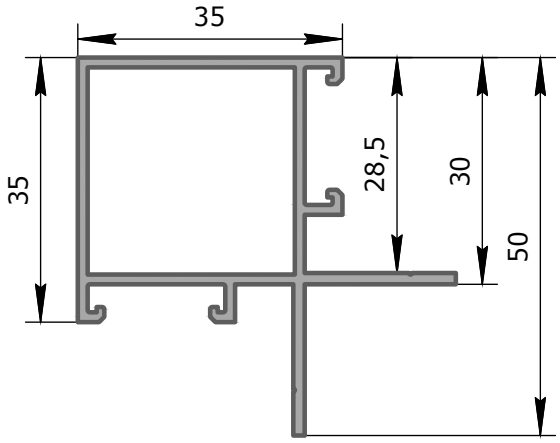

P30-401

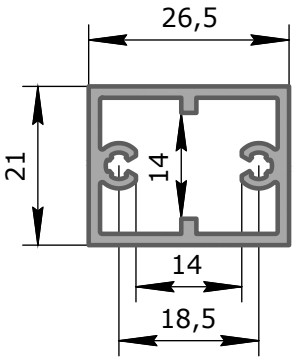

P30-601

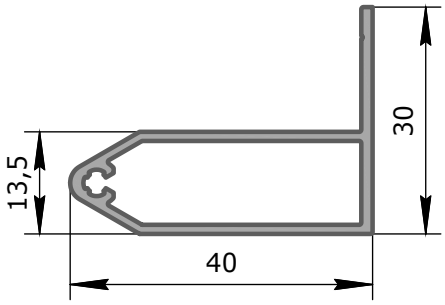

P40-002

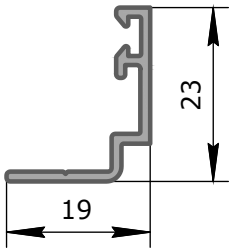

P00-100-40
internal window sill
40 mm

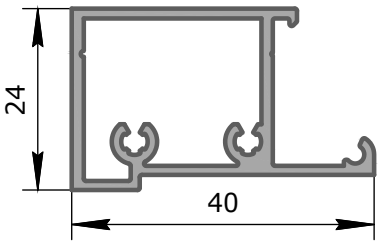

P00-530
external glazing
bead cover

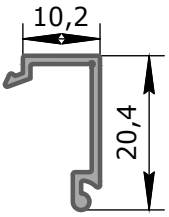

contents
profiles
delivery set
profiles (1:1)
sections
glazing tables
sub-assemblies tables
fitting arrangements
additional solutions
sub-assemblies
fire-resistant structures
connections
equipment and tools

Inertial characteristics of profiles (M1:4)

P61-401

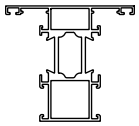

J_x, cm^{-4}	14,56
W_x, cm^{-3}	5,72
i_x, cm	1,95
J_y, cm^{-4}	8,62
W_y, cm^{-3}	2,54
i_y, cm	1,28

P61-403

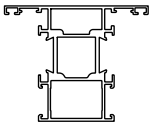

J_x, cm^{-4}	16,51
W_x, cm^{-3}	6,68
i_x, cm	1,99
J_y, cm^{-4}	14,37
W_y, cm^{-3}	3,78
i_y, cm	1,56

P61-452

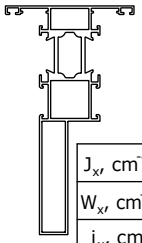

J_x, cm^{-4}	60,02
W_x, cm^{-3}	10,94
i_x, cm	3,5
J_y, cm^{-4}	10,31
W_y, cm^{-3}	2,86
i_y, cm	1,22

P61-401

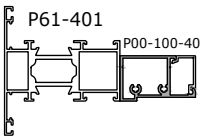

J_x, cm^{-4}	41,38
W_x, cm^{-3}	9,6
i_x, cm	2,87
J_y, cm^{-4}	10,38
W_y, cm^{-3}	2,93
i_y, cm	1,2

P61-403

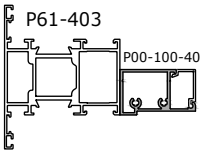

J_x, cm^{-4}	44,85
W_x, cm^{-3}	10,19
i_x, cm	2,86
J_y, cm^{-4}	16,99
W_y, cm^{-3}	4,22
i_y, cm	1,47

P61-301

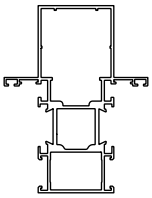

J_x, cm^{-4}	41,96
W_x, cm^{-3}	11,32
i_x, cm	2,87
J_y, cm^{-4}	19,1
W_y, cm^{-3}	5,03
i_y, cm	1,62

P61-302

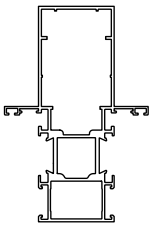

J_x, cm^{-4}	60,92
W_x, cm^{-3}	13,87
i_x, cm	3,34
J_y, cm^{-4}	21,03
W_y, cm^{-3}	5,53
i_y, cm	1,64

P61-303

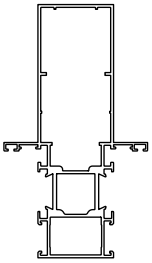

J_x, cm^{-4}	92,38
W_x, cm^{-3}	17,32
i_x, cm	3,96
J_y, cm^{-4}	23,25
W_y, cm^{-3}	6,12
i_y, cm	1,66

P61-304

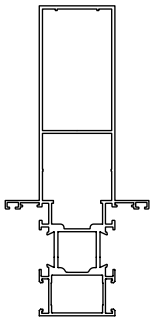

J_x, cm^{-4}	173,42
W_x, cm^{-3}	26,95
i_x, cm	4,92
J_y, cm^{-4}	28,38
W_y, cm^{-3}	7,47
i_y, cm	1,66

P61-301

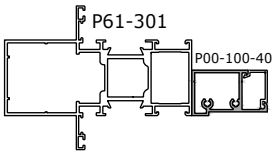

J_x, cm^{-4}	84,39
W_x, cm^{-3}	16,46
i_x, cm	3,62
J_y, cm^{-4}	21,77
W_y, cm^{-3}	5,45
i_y, cm	1,54

P61-302

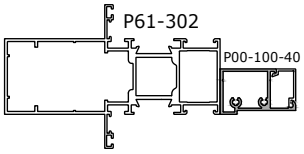

J_x, cm^{-4}	111,08
W_x, cm^{-3}	20,32
i_x, cm	4,04
J_y, cm^{-4}	23,72
W_y, cm^{-3}	5,96
i_y, cm	1,56

P61-303

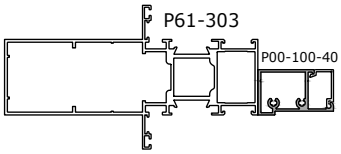

J_x, cm^{-4}	153,24
W_x, cm^{-3}	24,38
i_x, cm	4,61
J_y, cm^{-4}	25,96
W_y, cm^{-3}	6,54
i_y, cm	1,59

P61-304

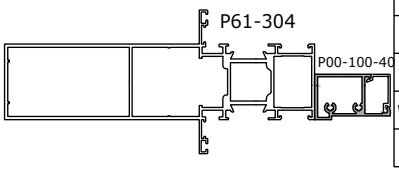

J_x, cm^{-4}	262,18
W_x, cm^{-3}	35,44
i_x, cm	5,55
J_y, cm^{-4}	31,13
W_y, cm^{-3}	7,89
i_y, cm	1,6

P61-301

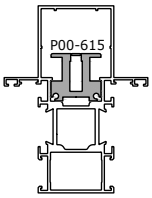

J_x, cm^{-4}	46,58
W_x, cm^{-3}	13,15
i_x, cm	2,5
J_y, cm^{-4}	20,98
W_y, cm^{-3}	5,52
i_y, cm	1,4

P61-302

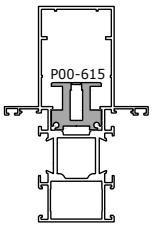

J_x, cm^{-4}	63,62
W_x, cm^{-3}	15,14
i_x, cm	2,85
J_y, cm^{-4}	22,9
W_y, cm^{-3}	6,03
i_y, cm	1,43

P61-303

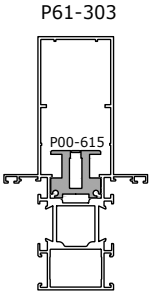

J_x, cm^{-4}	93,84
W_x, cm^{-3}	17,75
i_x, cm	3,37
J_y, cm^{-4}	25,13
W_y, cm^{-3}	6,61
i_y, cm	1,46

P61-304

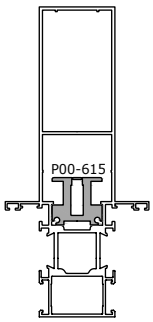

J_x, cm^{-4}	177,26
W_x, cm^{-3}	26,69
i_x, cm	4,31
J_y, cm^{-4}	30,25
W_y, cm^{-3}	7,96
i_y, cm	1,49

contents
profiles
delivery set
profiles (1:1)
sections
glazing tables
sub-assemblies tables
fitting arrangements
additional solutions
sub-assemblies
fire-resistant structures
connections
equipment and tools

P61-401

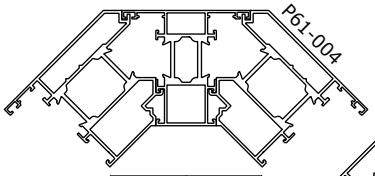

J_x, cm^{-4}	54,19
W_x, cm^{-3}	16,6
i_x, cm	2,05
J_y, cm^{-4}	354,72
W_y, cm^{-3}	36,9
i_y, cm	4,4

P61-403

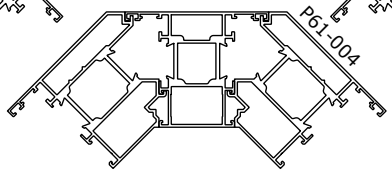

J_x, cm^{-4}	57,3
W_x, cm^{-3}	17,39
i_x, cm	2,08
J_y, cm^{-4}	412,5
W_y, cm^{-3}	41,2
i_y, cm	4,66

P61-452

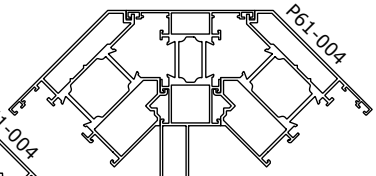

J_x, cm^{-4}	94,9
W_x, cm^{-3}	16,97
i_x, cm	2,6
J_y, cm^{-4}	356,62
W_y, cm^{-3}	36,82
i_y, cm	4,22

P61-301

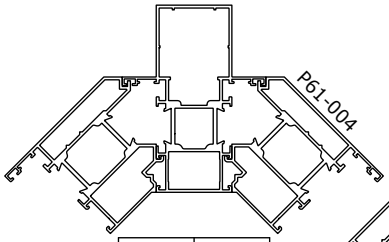

J_x, cm^{-4}	97,69
W_x, cm^{-3}	20,16
i_x, cm	2,62
J_y, cm^{-4}	417,26
W_y, cm^{-3}	41,67
i_y, cm	4,53

P61-302

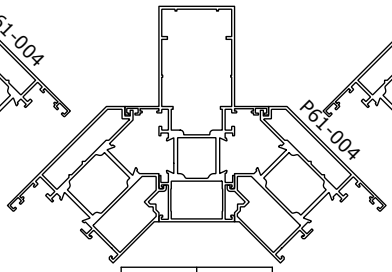

J_x, cm^{-4}	127,53
W_x, cm^{-3}	22,26
i_x, cm	2,95
J_y, cm^{-4}	419,18
W_y, cm^{-3}	41,86
i_y, cm	4,48

P61-303

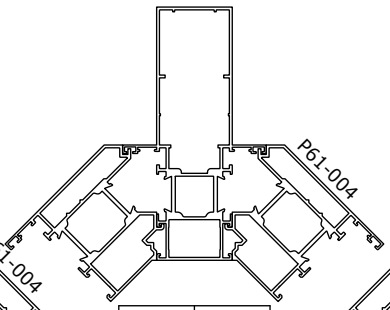

J_x, cm^{-4}	251,94
W_x, cm^{-3}	25,51
i_x, cm	3,42
J_y, cm^{-4}	421,41
W_y, cm^{-3}	42,08
i_y, cm	4,43

P61-304

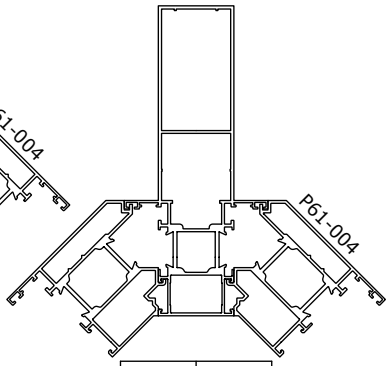

J_x, cm^{-4}	314,21
W_x, cm^{-3}	37,18
i_x, cm	4,39
J_y, cm^{-4}	426,53
W_y, cm^{-3}	42,6
i_y, cm	4,28

P61-301

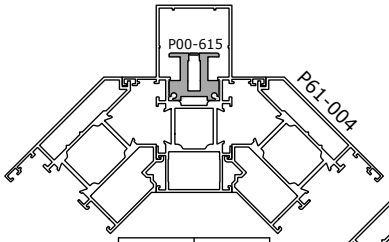

J_x, cm^{-4}	117,98
W_x, cm^{-3}	25,99
i_x, cm	2,66
J_y, cm^{-4}	419,13
W_y, cm^{-3}	41,86
i_y, cm	4,2

P61-302

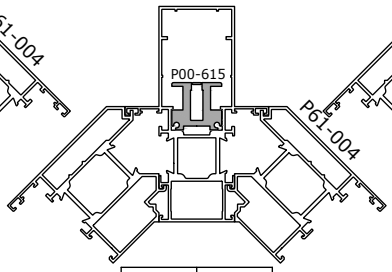

J_x, cm^{-4}	145,06
W_x, cm^{-3}	26,59
i_x, cm	2,92
J_y, cm^{-4}	421,06
W_y, cm^{-3}	42,05
i_y, cm	4,16

P61-303

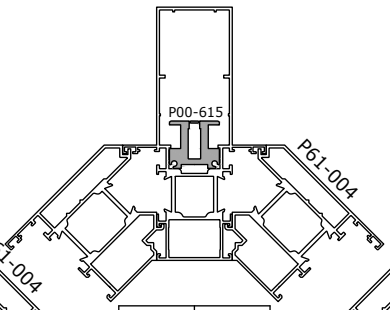

J_x, cm^{-4}	190,56
W_x, cm^{-3}	28,55
i_x, cm	3,31
J_y, cm^{-4}	423,28
W_y, cm^{-3}	42,27
i_y, cm	4,12

P61-304

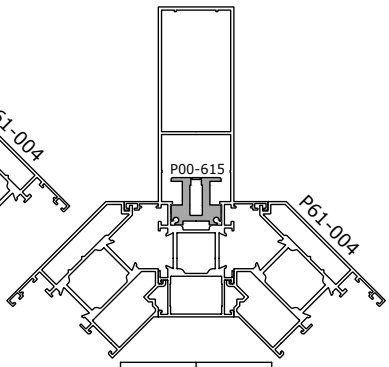

J_x, cm^{-4}	321,55
W_x, cm^{-3}	38,74
i_x, cm	4,15
J_y, cm^{-4}	428,41
W_y, cm^{-3}	42,78
i_y, cm	4,0

contents
profiles
delivery set
profiles (1:1)
sections
glazing tables
sub-assemblies tables
fitting arrangements
additional solutions
sub-assemblies
fire-resistant structures
connections
equipment and tools

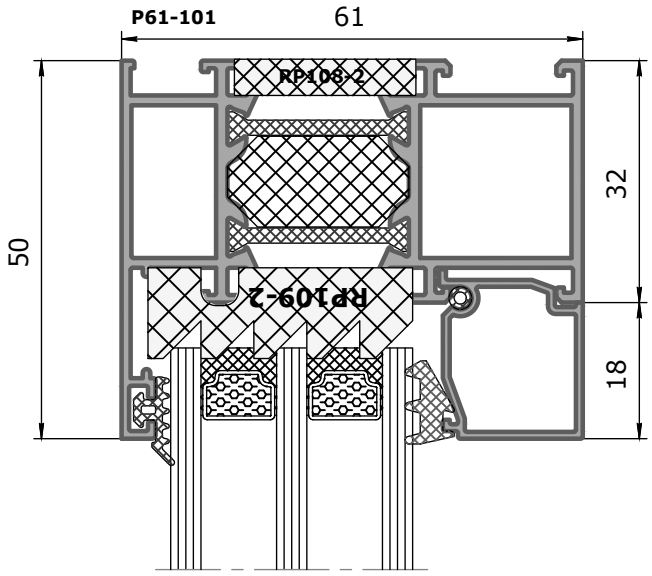

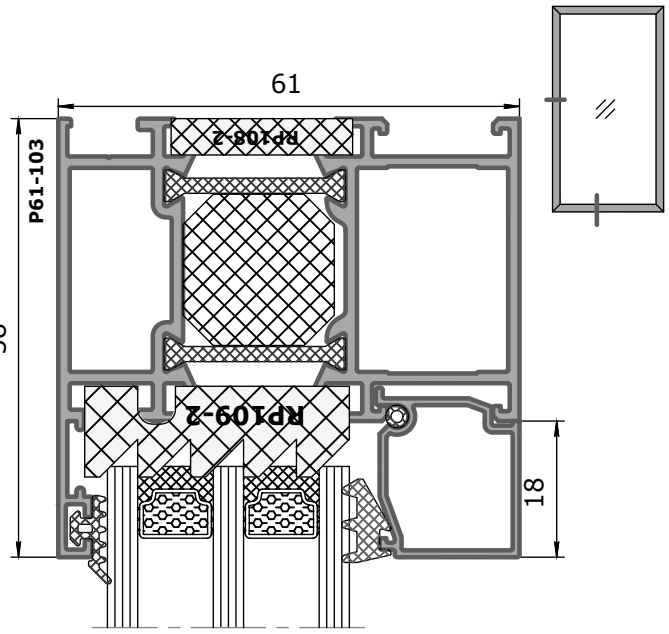

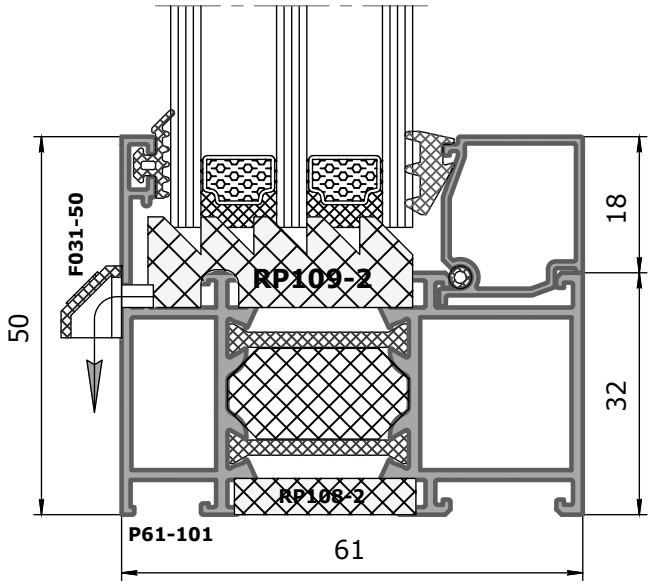

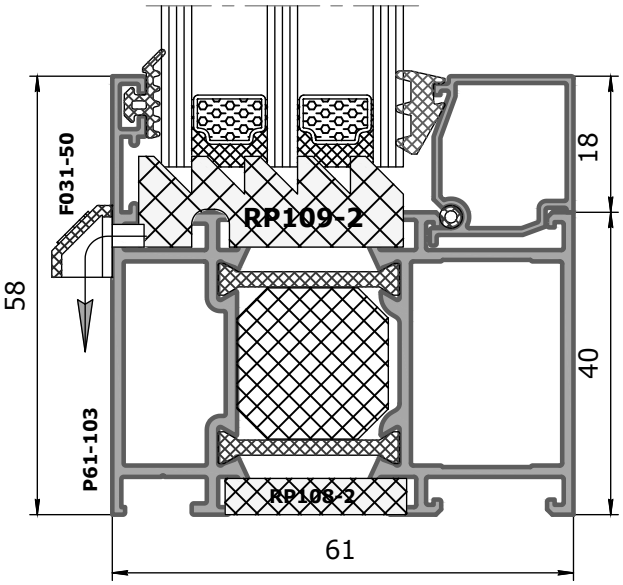

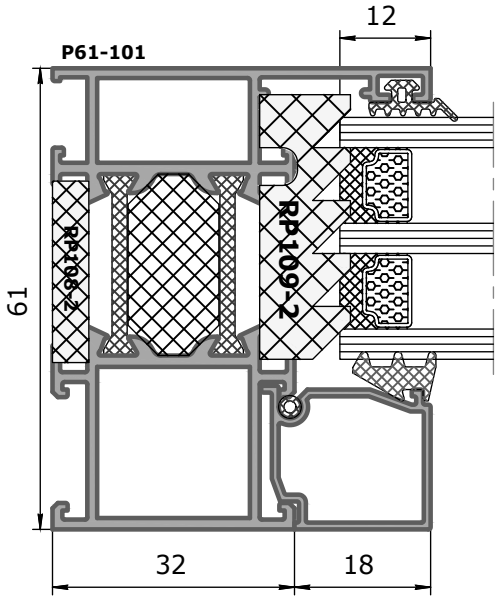

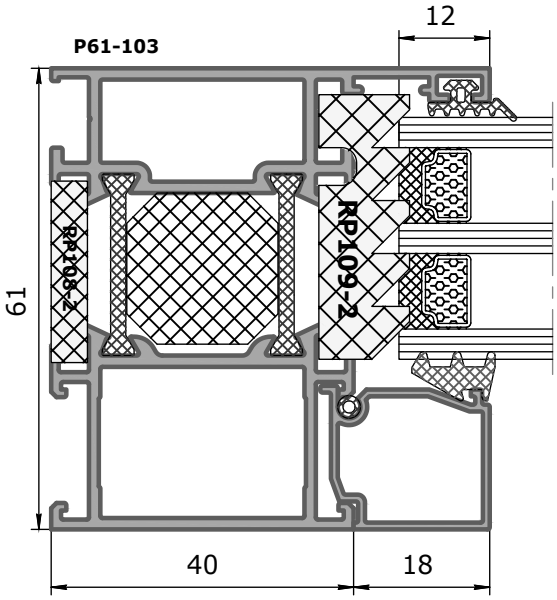

contents
profiles
delivery set
profiles (1:1)
sections
glazing tables
sub-assemblies tables
fitting arrangements
additional solutions
sub-assemblies
fire-resistant structures
connections
equipment and tools

contents
profiles
delivery set
profiles (1:1)
sections
glazing tables
sub-assemblies tables
fitting arrangements
additional solutions
sub-assemblies
fire-resistant structures
connections
equipment and tools

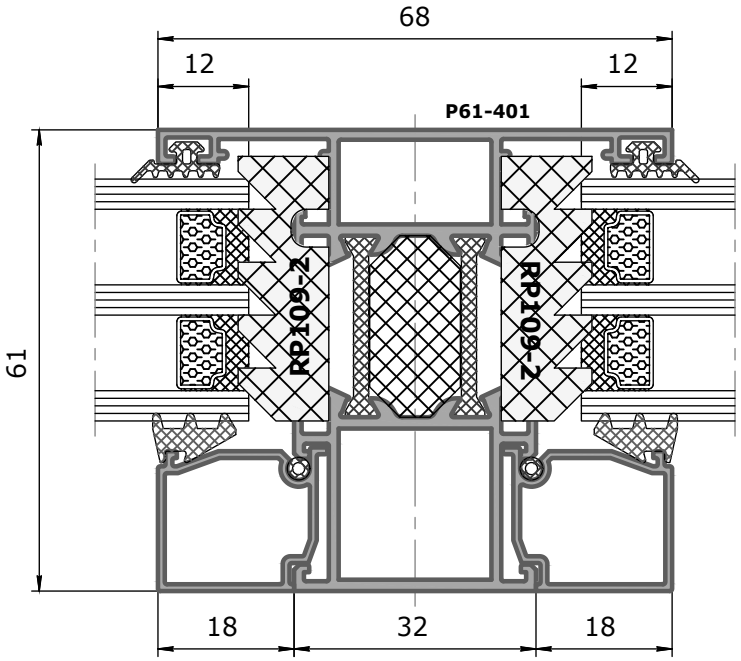

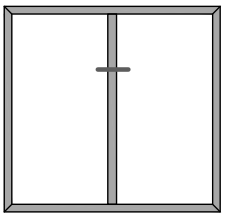

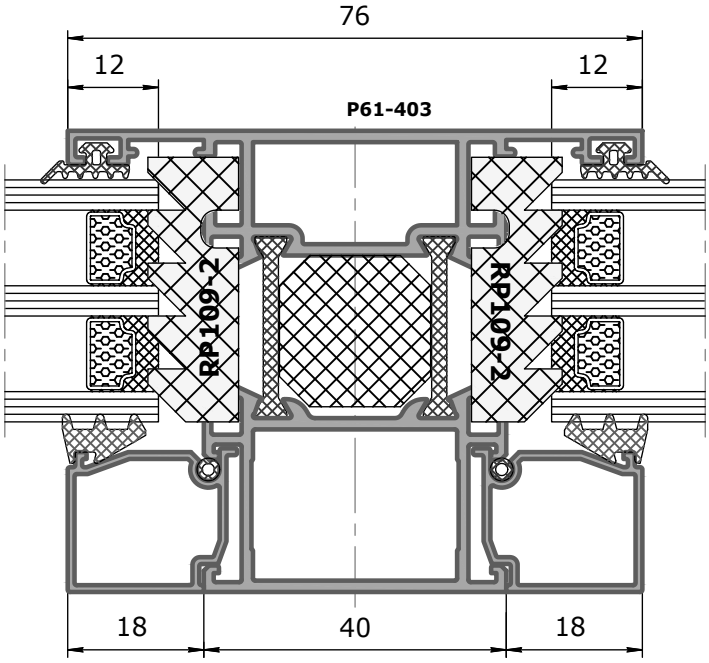

contents
profiles
delivery set
profiles (1:1)
sections
glazing tables
sub-assemblies tables
fitting arrangements
additional solutions
sub-assemblies
fire-resistant structures
connections
equipment and tools

contents
profiles
delivery set
profiles (1:1)
sections
glazing tables
sub-assemblies tables
fitting arrangements
additional solutions
sub-assemblies
fire-resistant structures
connections
equipment and tools

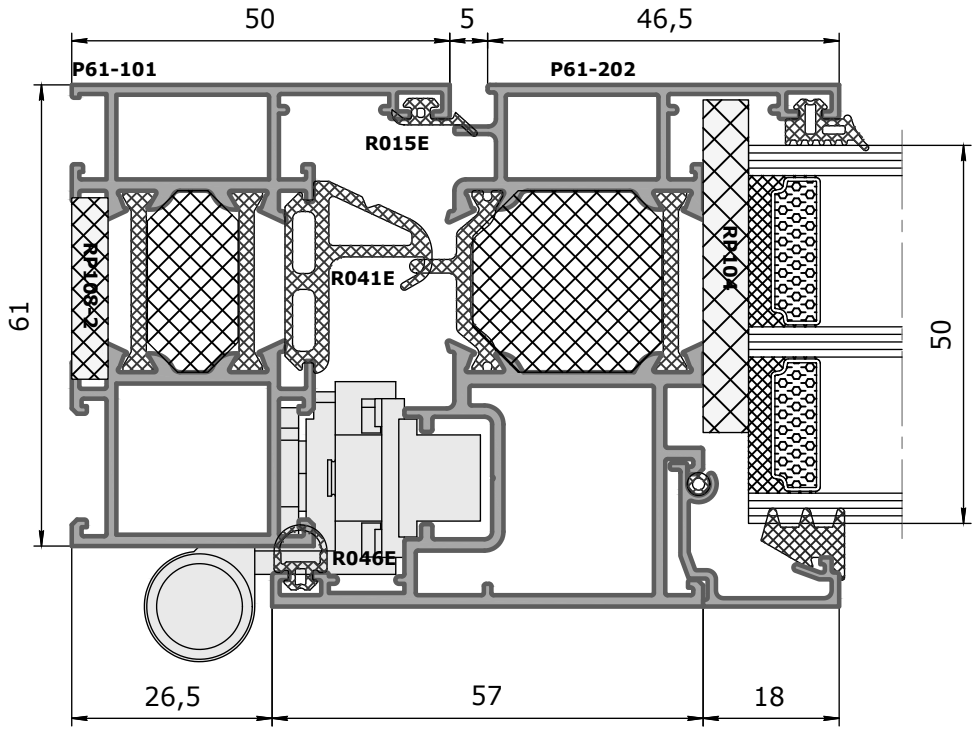

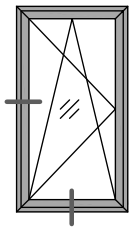

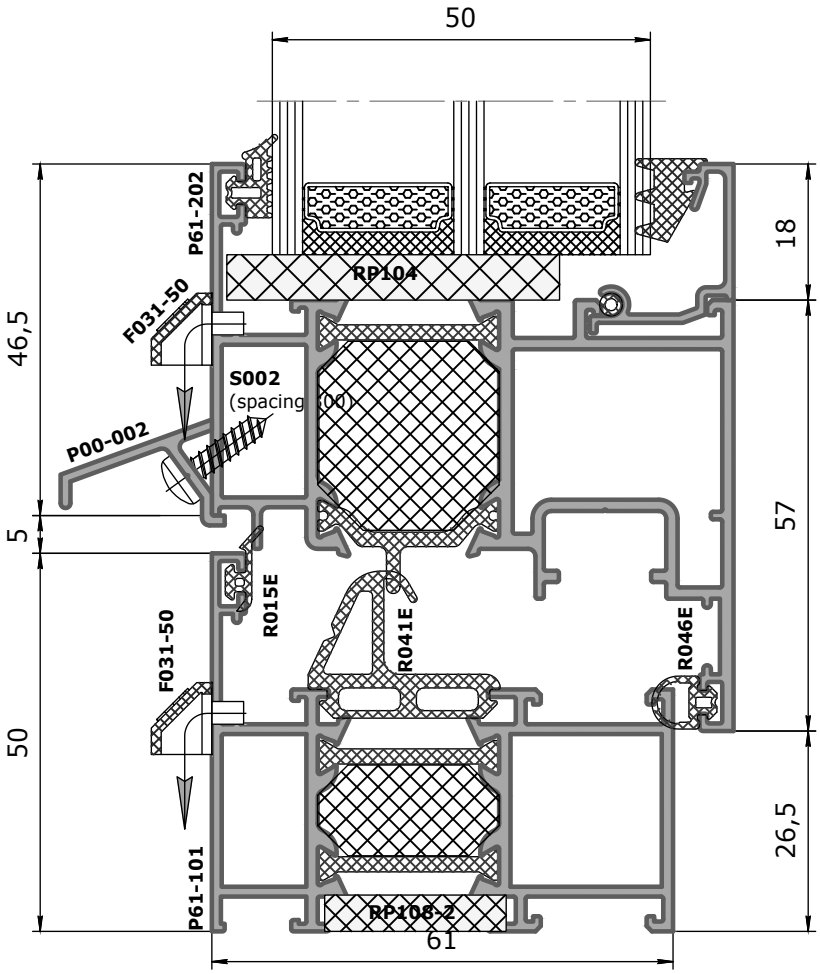

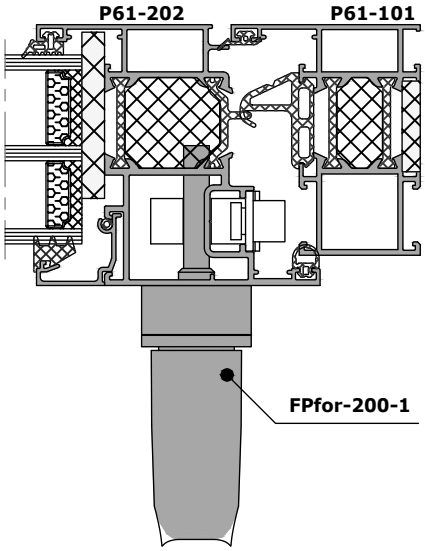

contents
profiles
delivery set
profiles (1:1)
sections
glazing tables
sub-assemblies tables
fitting arrangements
additional solutions
sub-assemblies
fire-resistant structures
connections
equipment and tools

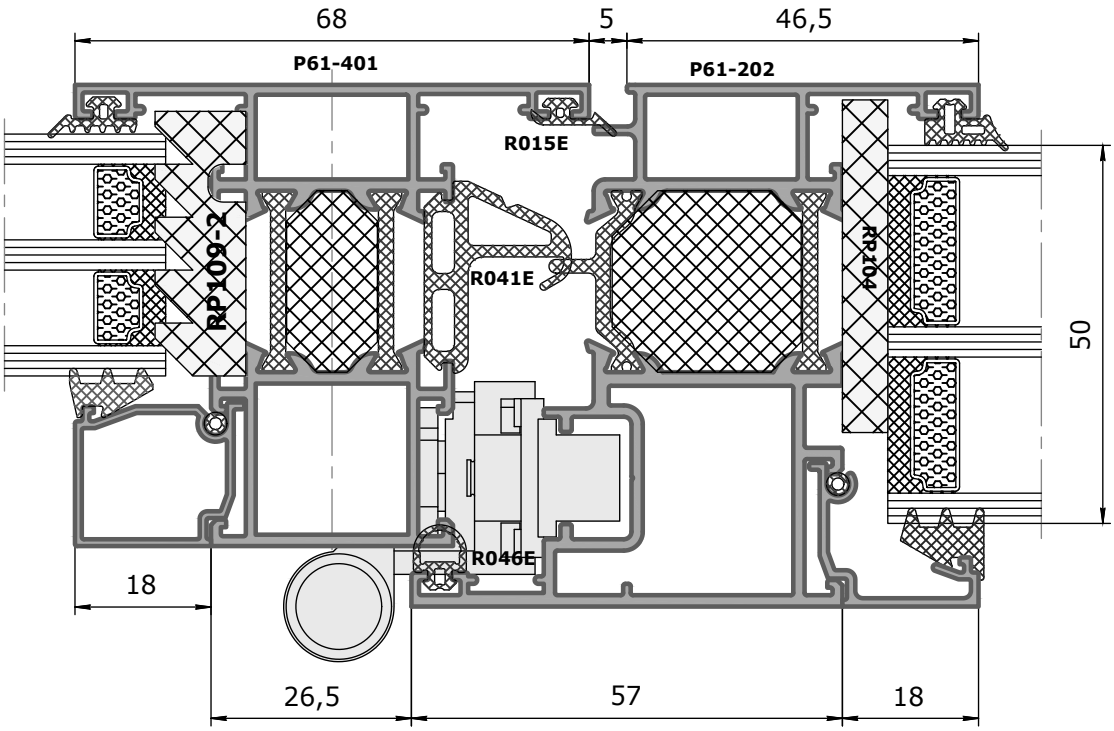

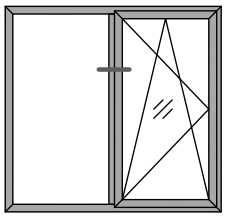

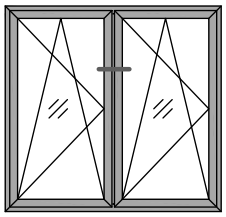

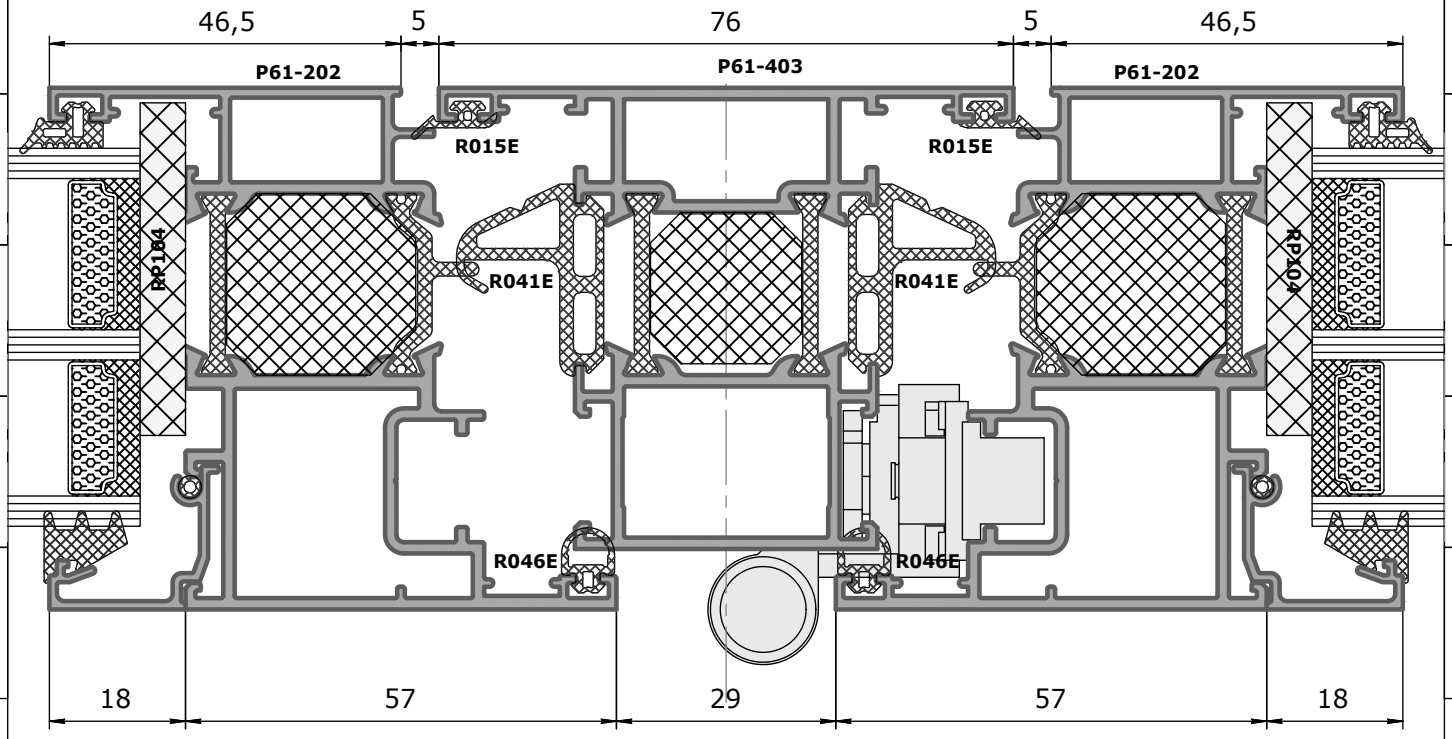

contents
profiles
delivery set
profiles (1:1)
sections
glazing tables
sub-assemblies tables
fitting arrangements
additional solutions
sub-assemblies
fire-resistant structures
connections
equipment and tools

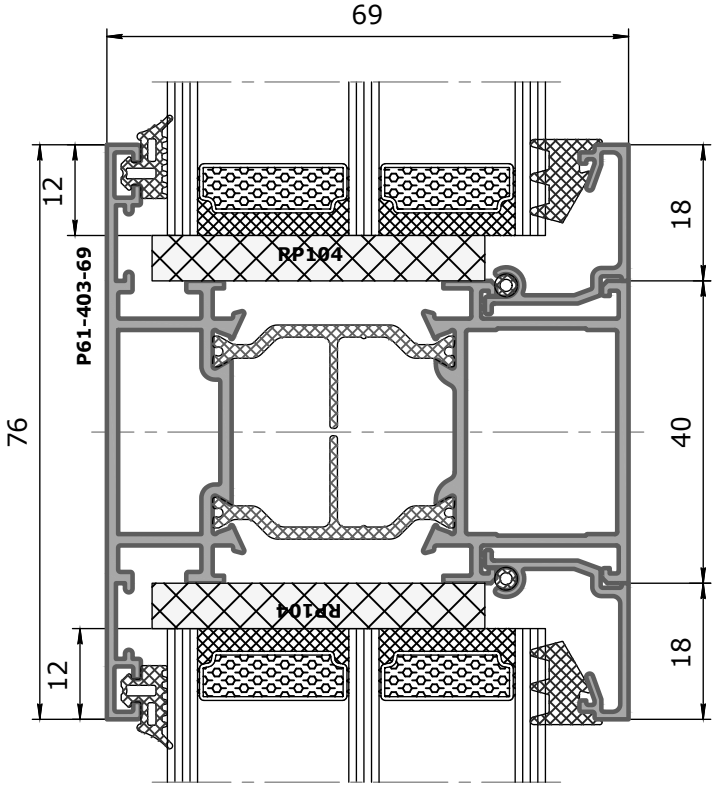

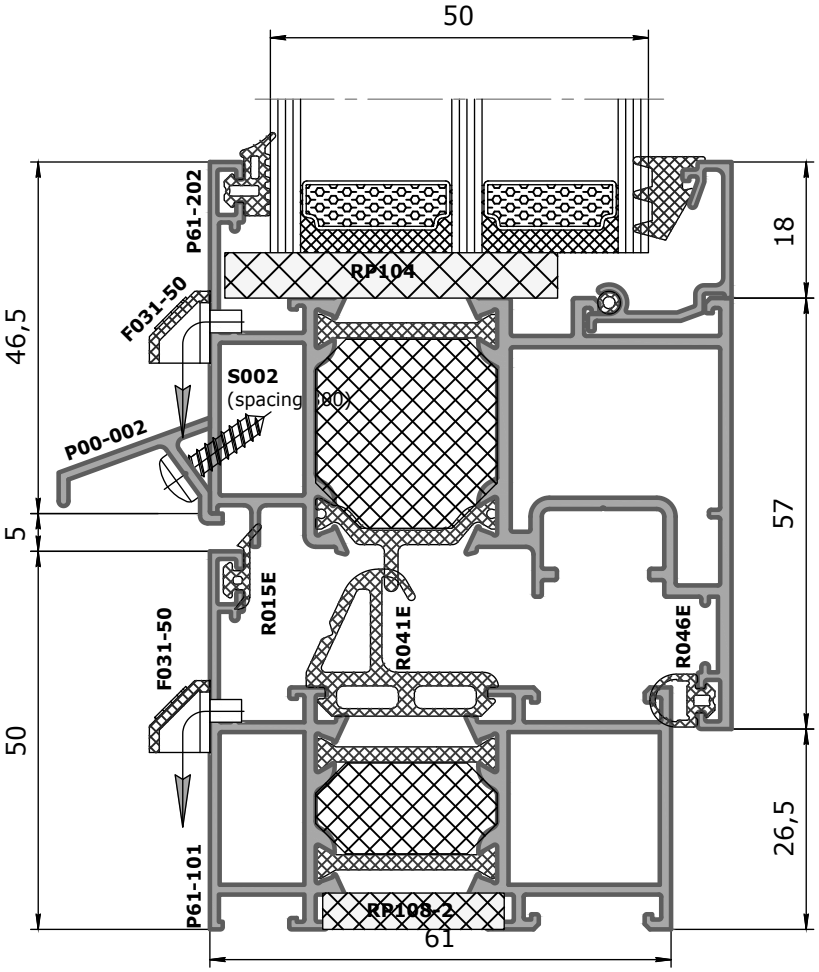

contents
profiles
delivery set
profiles (1:1)
sections
glazing tables
sub-assemblies tables
fitting arrangements
additional solutions
sub-assemblies
fire-resistant structures
connections
equipment and tools

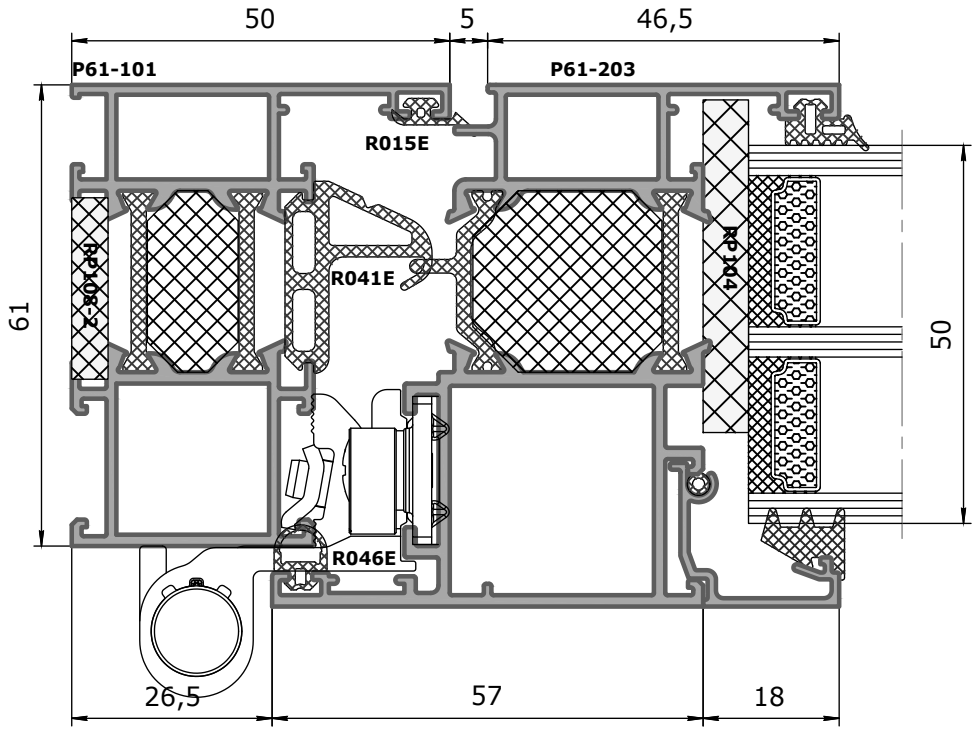

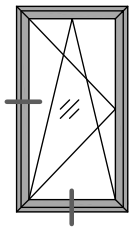

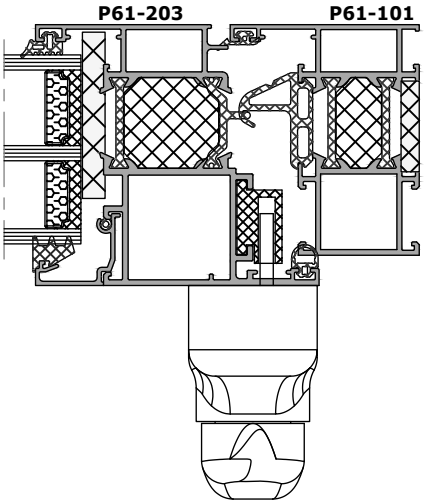

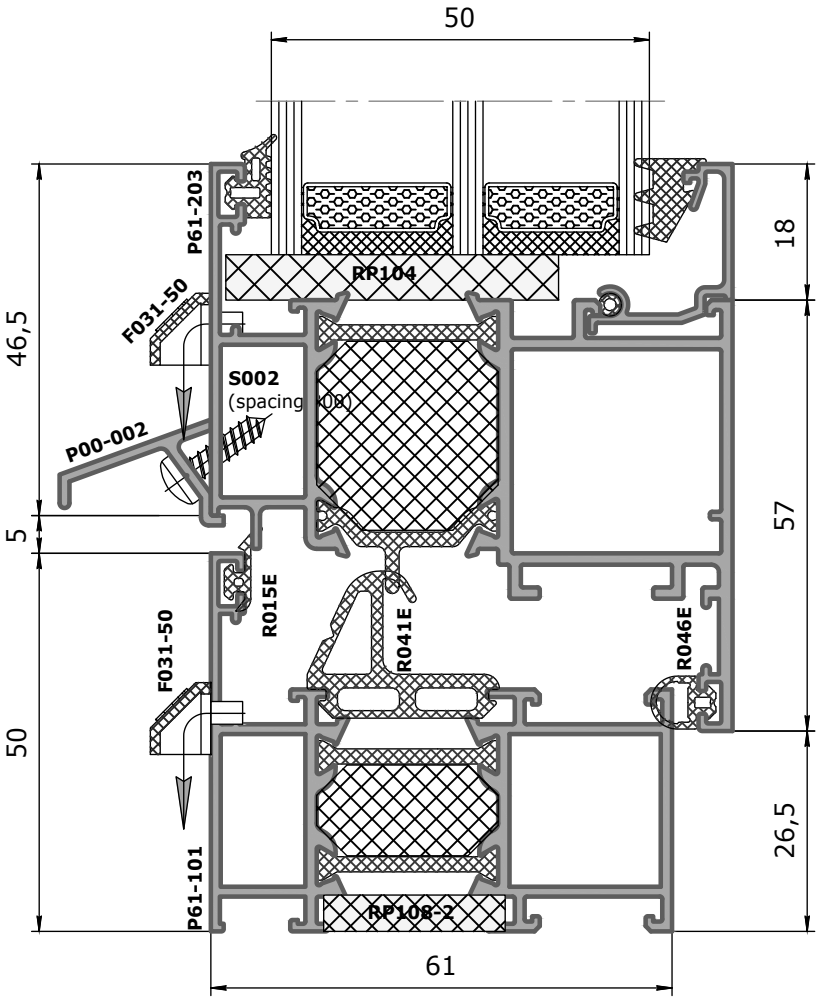

contents
profiles
delivery set
profiles (1:1)
sections
glazing tables
sub-assemblies tables
fitting arrangements
additional solutions
sub-assemblies
fire-resistant structures
connections
equipment and tools

contents
profiles
delivery set
profiles (1:1)
sections
glazing tables
sub-assemblies tables
fitting arrangements
additional solutions
sub-assemblies
fire-resistant structures
connections
equipment and tools

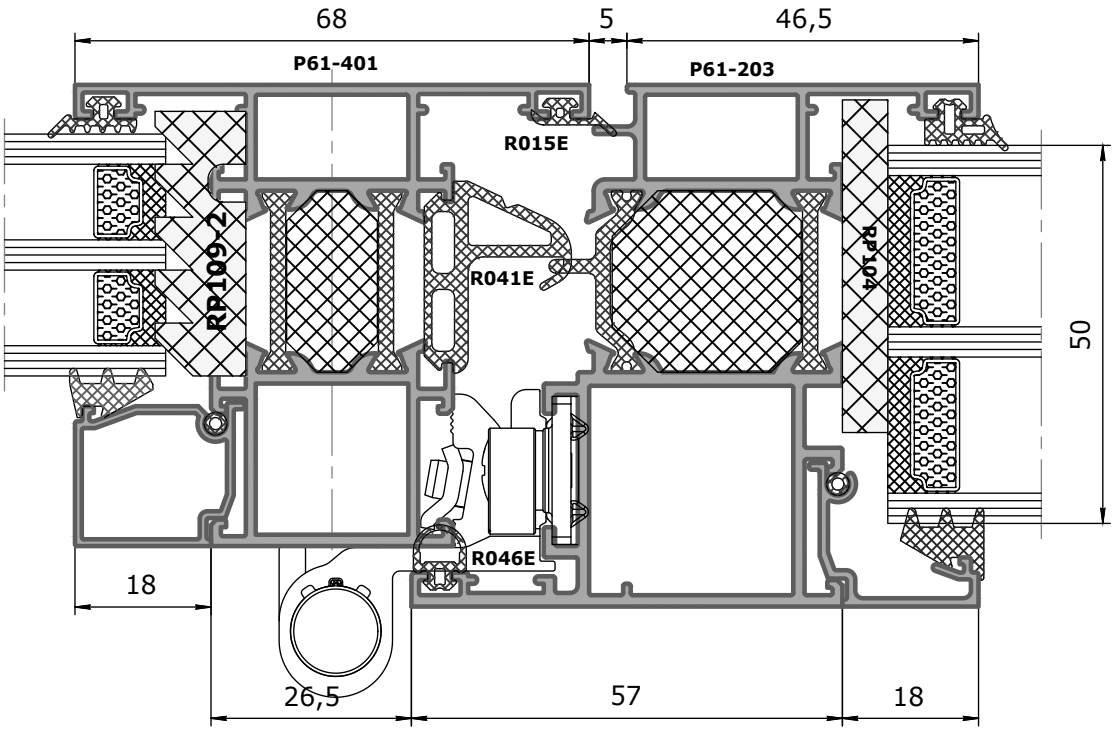

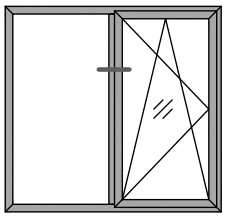

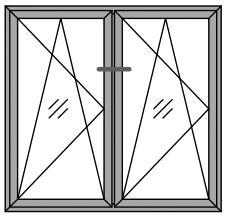

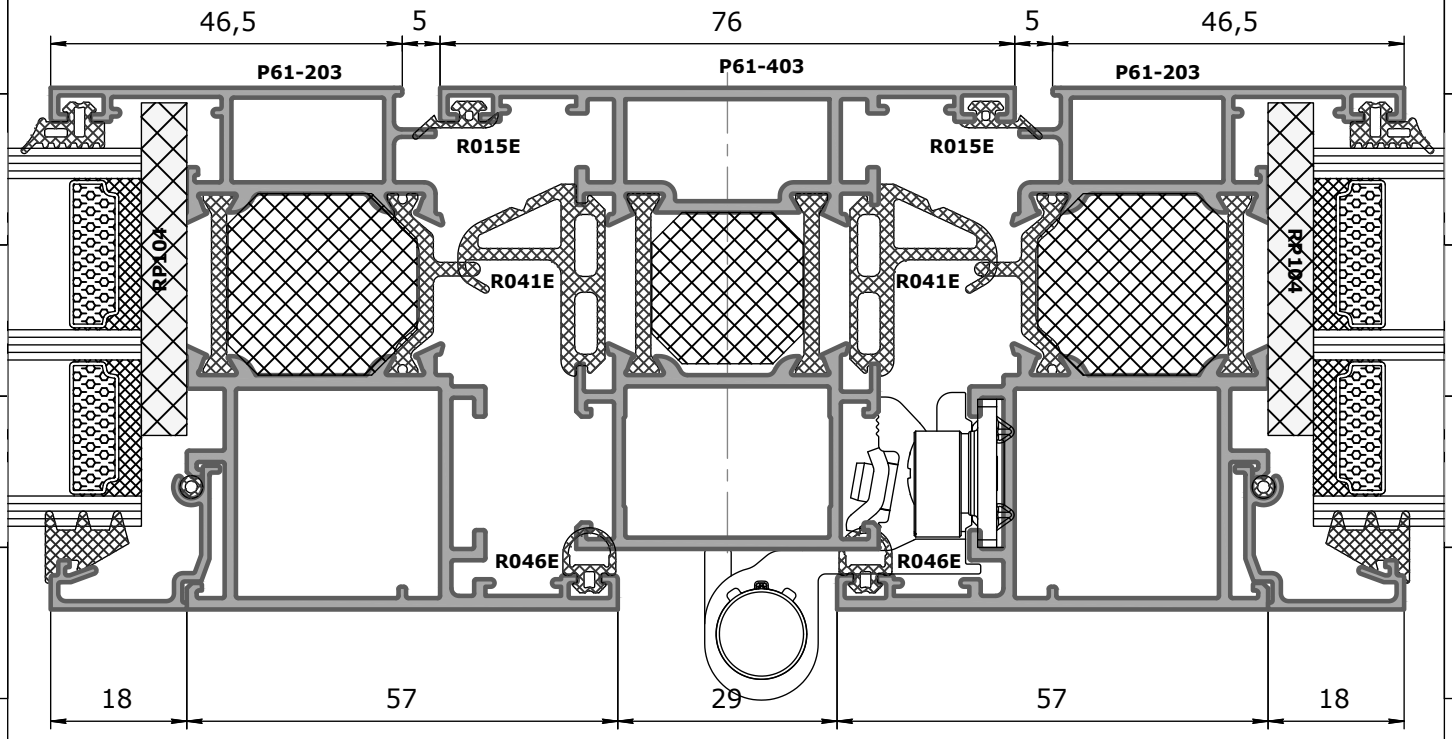

contents
profiles
delivery set
profiles (1:1)
sections
glazing tables
sub-assemblies tables
fitting arrangements
additional solutions
sub-assemblies
fire-resistant structures
connections
equipment and tools

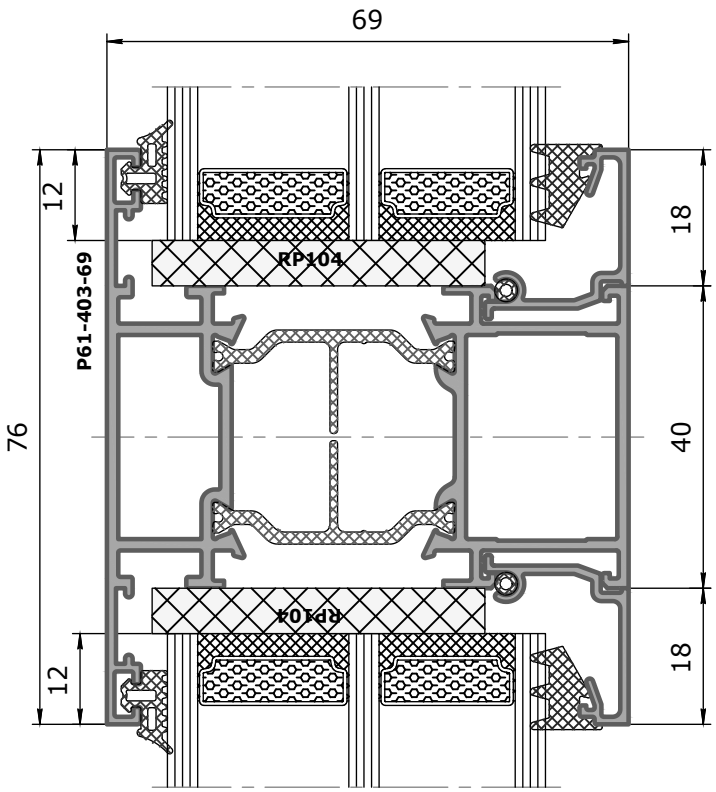

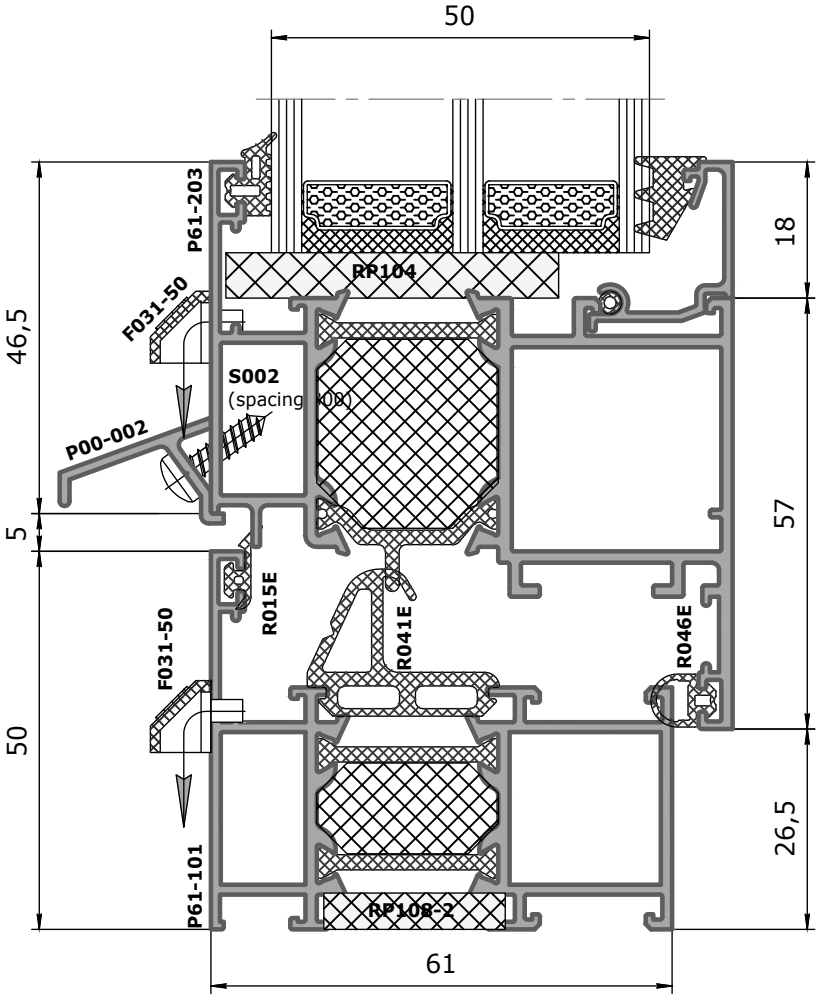

contents
profiles
delivery set
profiles (1:1)
sections
glazing tables
sub-assemblies tables
fitting arrangements
additional solutions
sub-assemblies
fire-resistant structures
connections
equipment and tools

contents
profiles
delivery set
profiles (1:1)
sections
glazing tables
sub-assemblies tables
fitting arrangements
additional solutions
sub-assemblies
fire-resistant structures
connections
equipment and tools

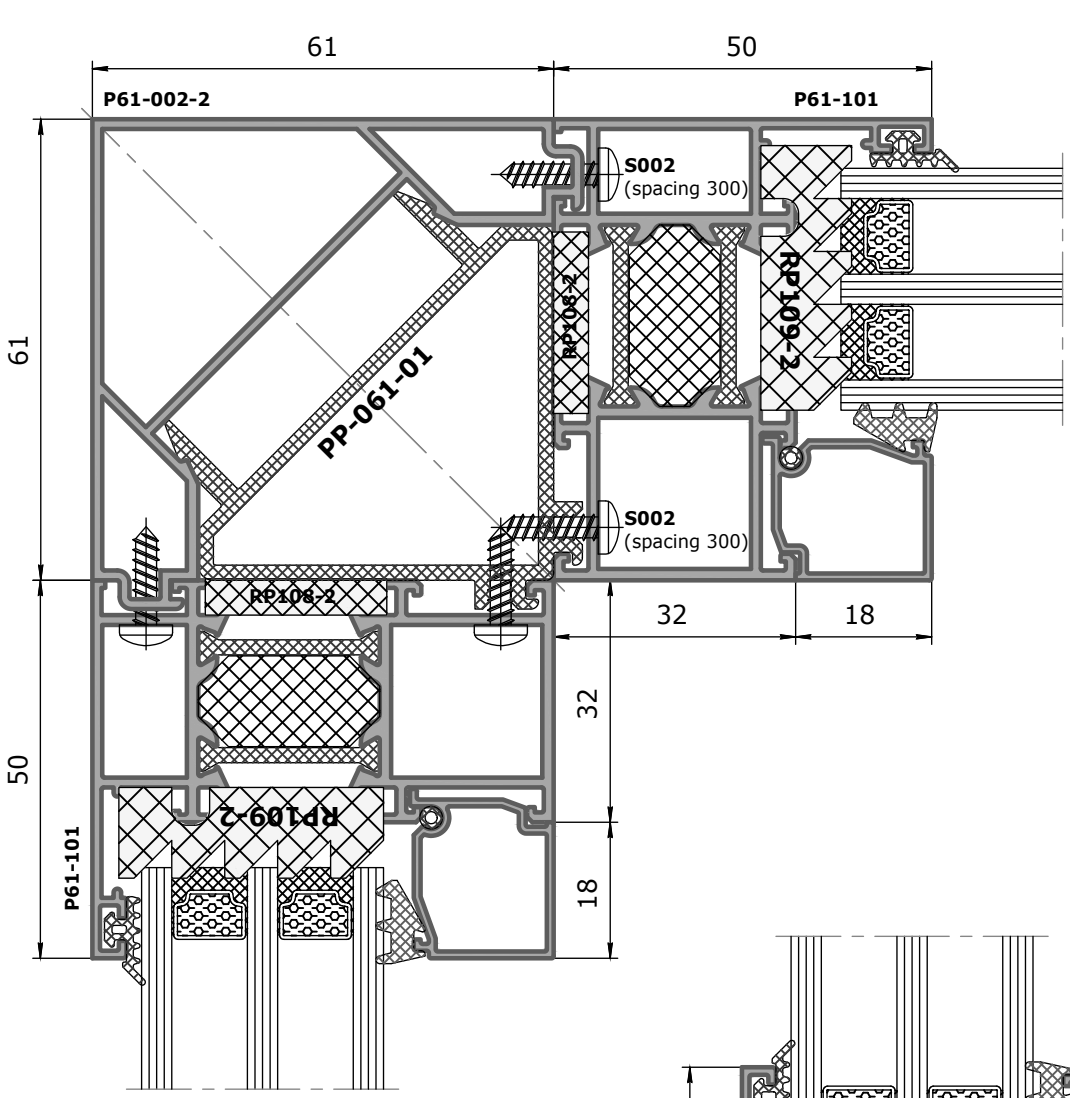

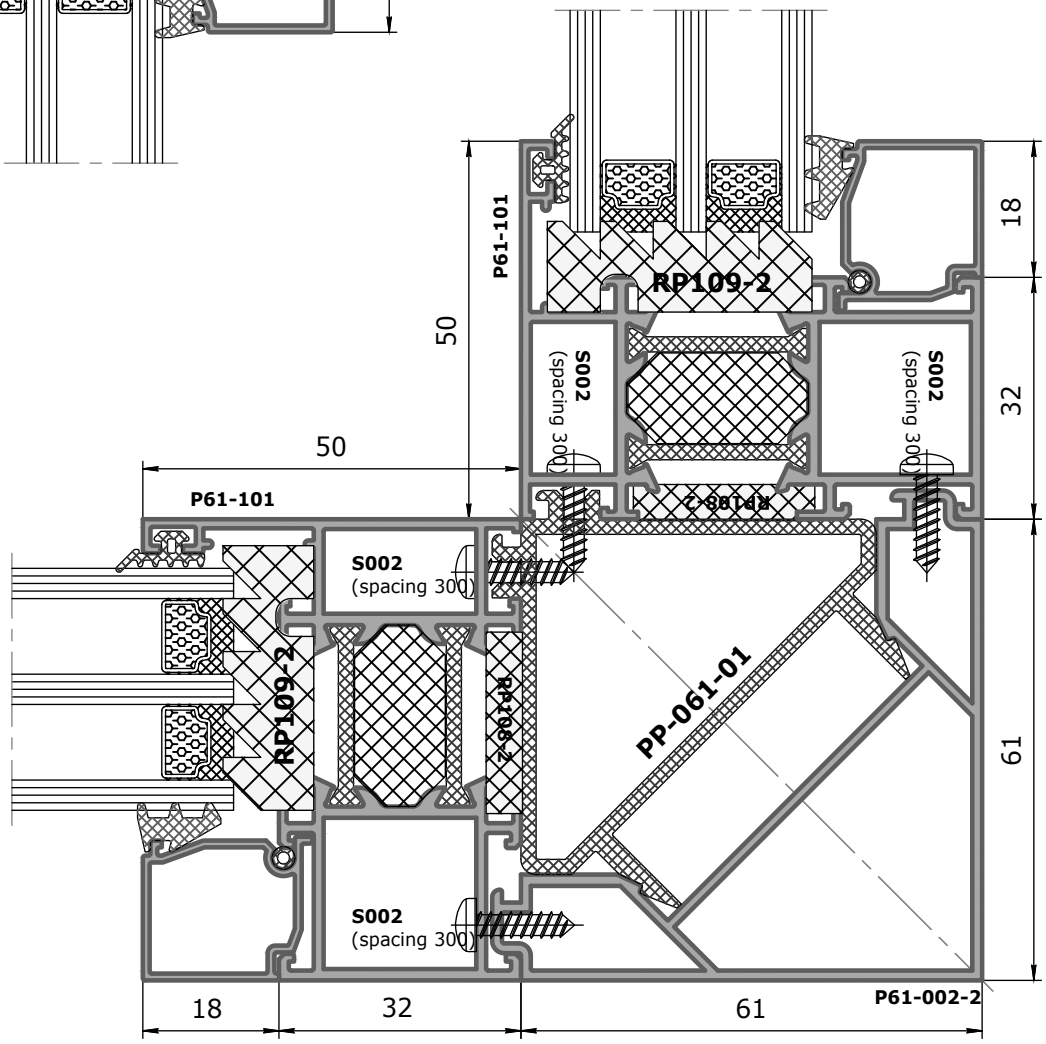

contents
profiles
delivery set
profiles (1:1)
sections
glazing tables
sub-assemblies tables
fitting arrangements
additional solutions
sub-assemblies
fire-resistant structures
connections
equipment and tools

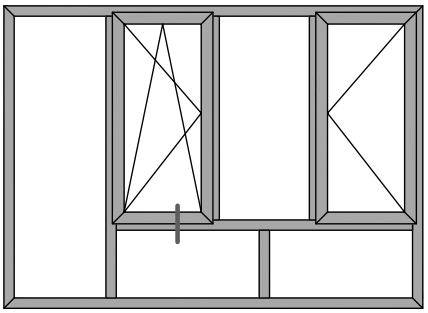

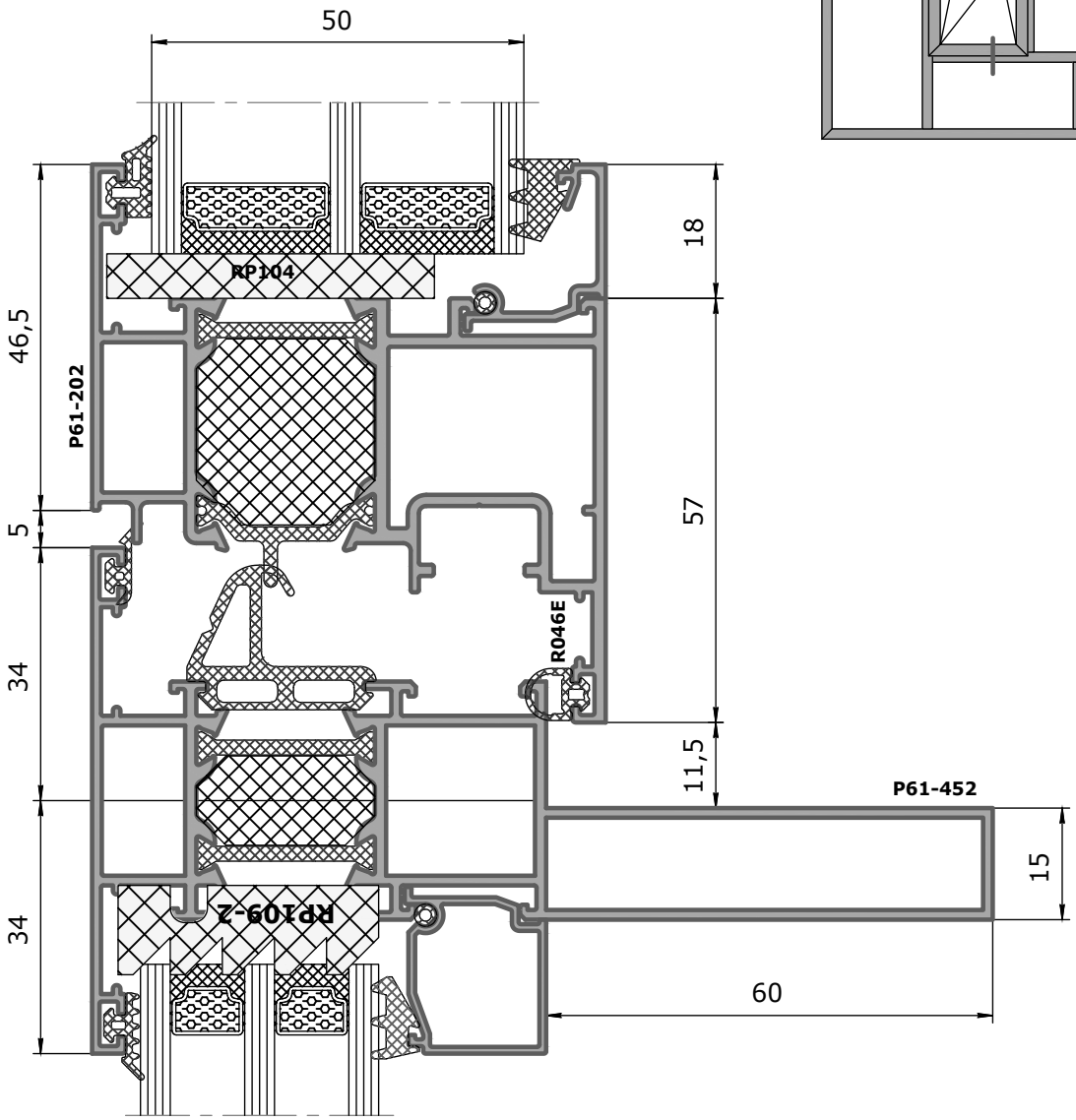

installing the end caps in reinforced part of the mullion

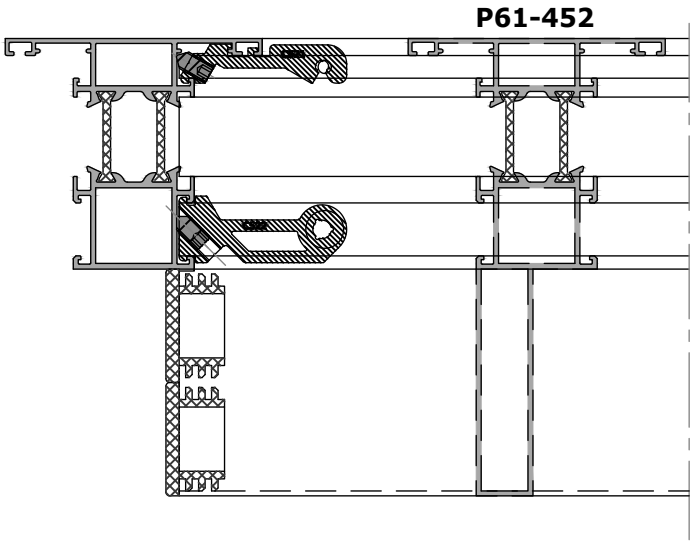

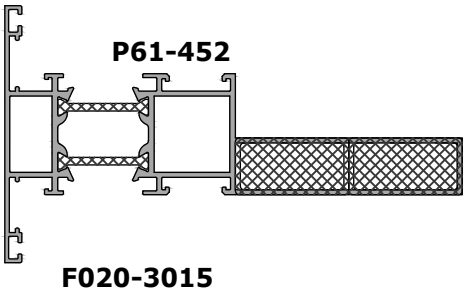

F020-3015
rectangular cap 30 x 15

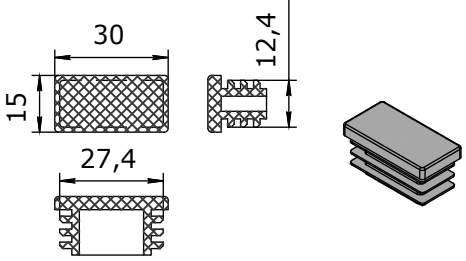

contents
profiles
delivery set
profiles (1:1)
sections
glazing tables
sub-assemblies tables
fitting arrangements
additional solutions
sub-assemblies
fire-resistant structures
connections
equipment and tools

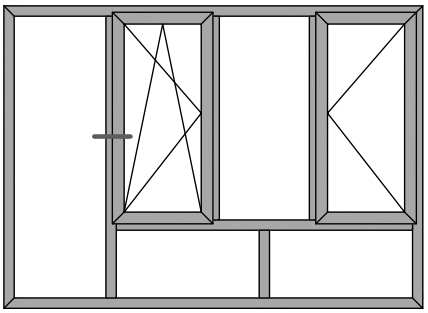

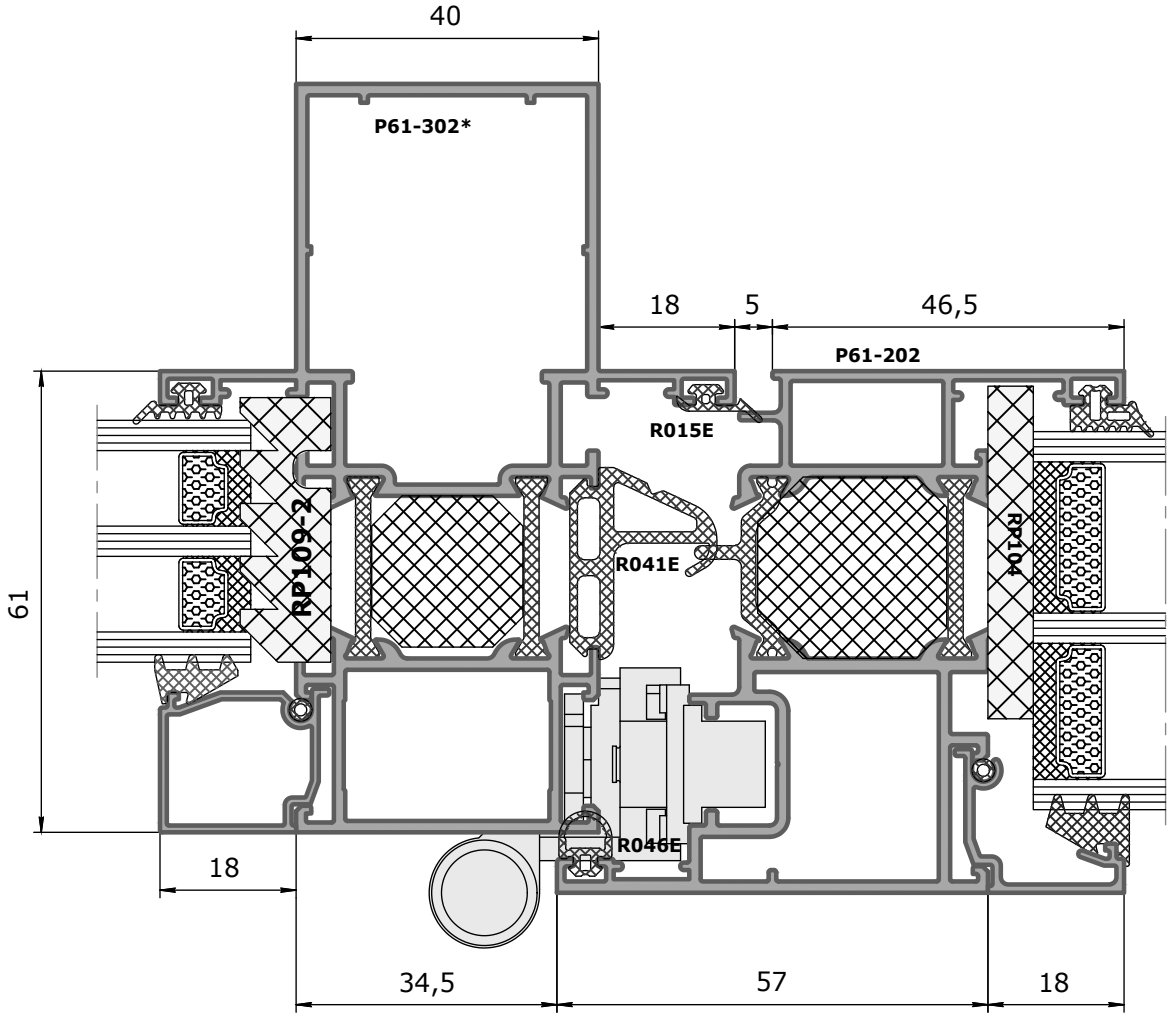

contents
profiles
delivery set
profiles (1:1)
sections
glazing tables
sub-assemblies tables
fitting arrangements
additional solutions
sub-assemblies
fire-resistant structures
connections
equipment and tools

contents
profiles
delivery set
profiles (1:1)
sections
glazing tables
sub-assemblies tables
fitting arrangements
additional solutions
sub-assemblies
fire-resistant structures
connections
equipment and tools

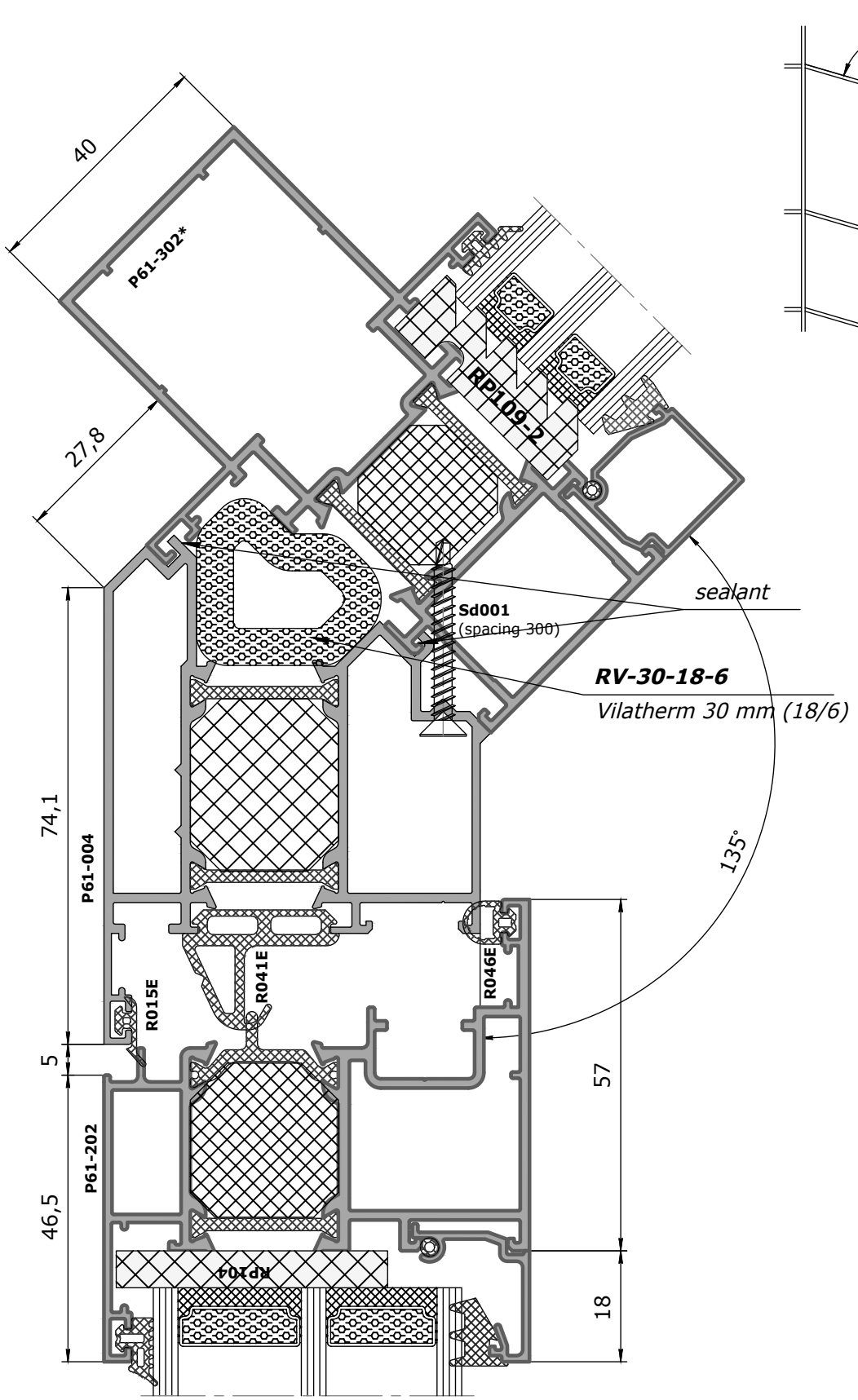

The joints between the mullion profiles and the adapters shall be additionally sealed with a neutral sealant along the entire length of the profiles.

***** — delivery period 8–10 weeks

contents
profiles
delivery set
profiles (1:1)
sections
glazing tables
sub-assemblies tables
fitting arrangements
additional solutions
sub-assemblies
fire-resistant structures
connections
equipment and tools

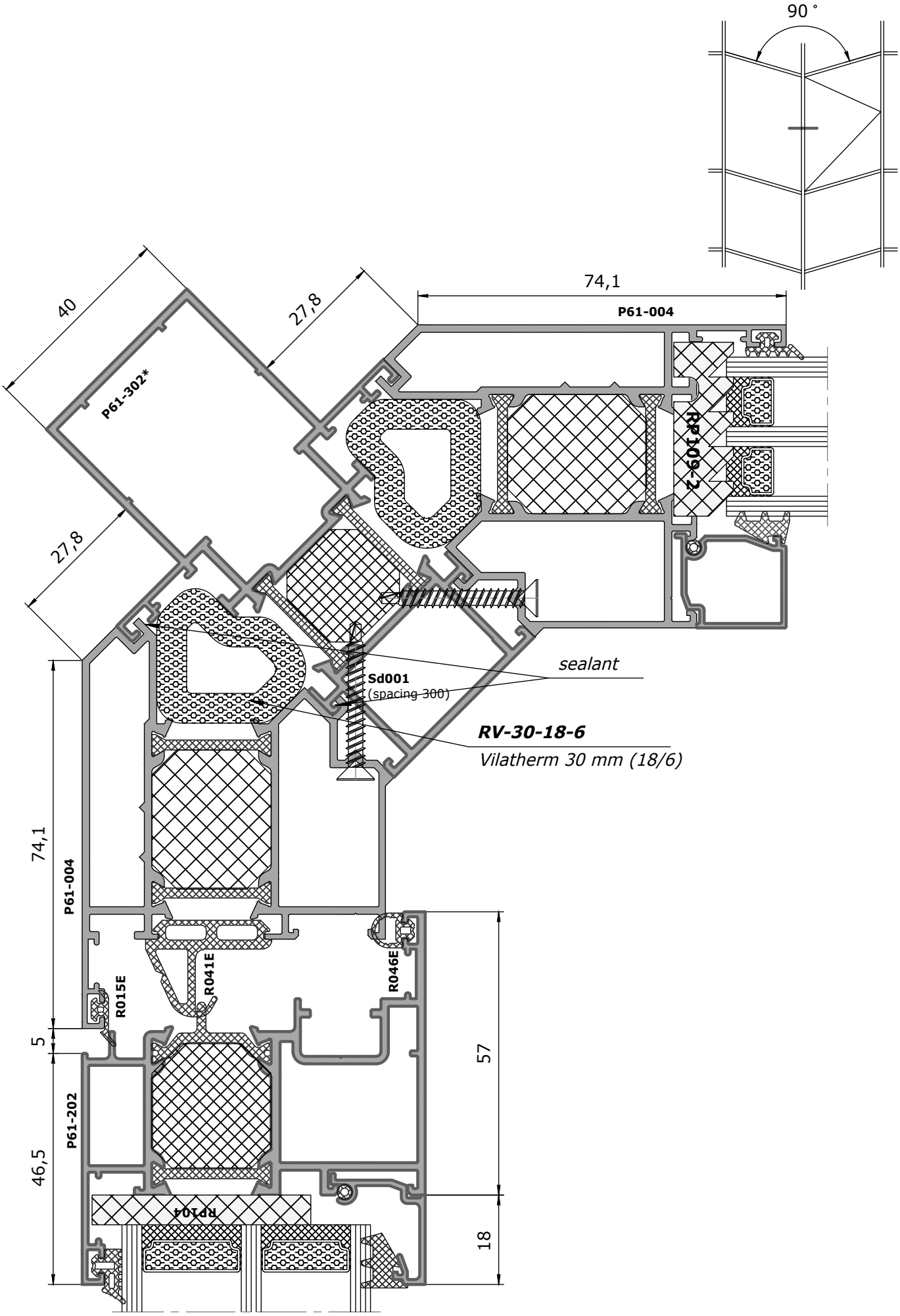

contents
profiles
delivery set
profiles (1:1)
sections
glazing tables
sub-assemblies tables
fitting arrangements
additional solutions
sub-assemblies
fire-resistant structures
connections
equipment and tools

contents
profiles
delivery set
profiles (1:1)
sections
glazing tables
sub-assemblies tables
fitting arrangements
additional solutions
sub-assemblies
fire-resistant structures
connections
equipment and tools

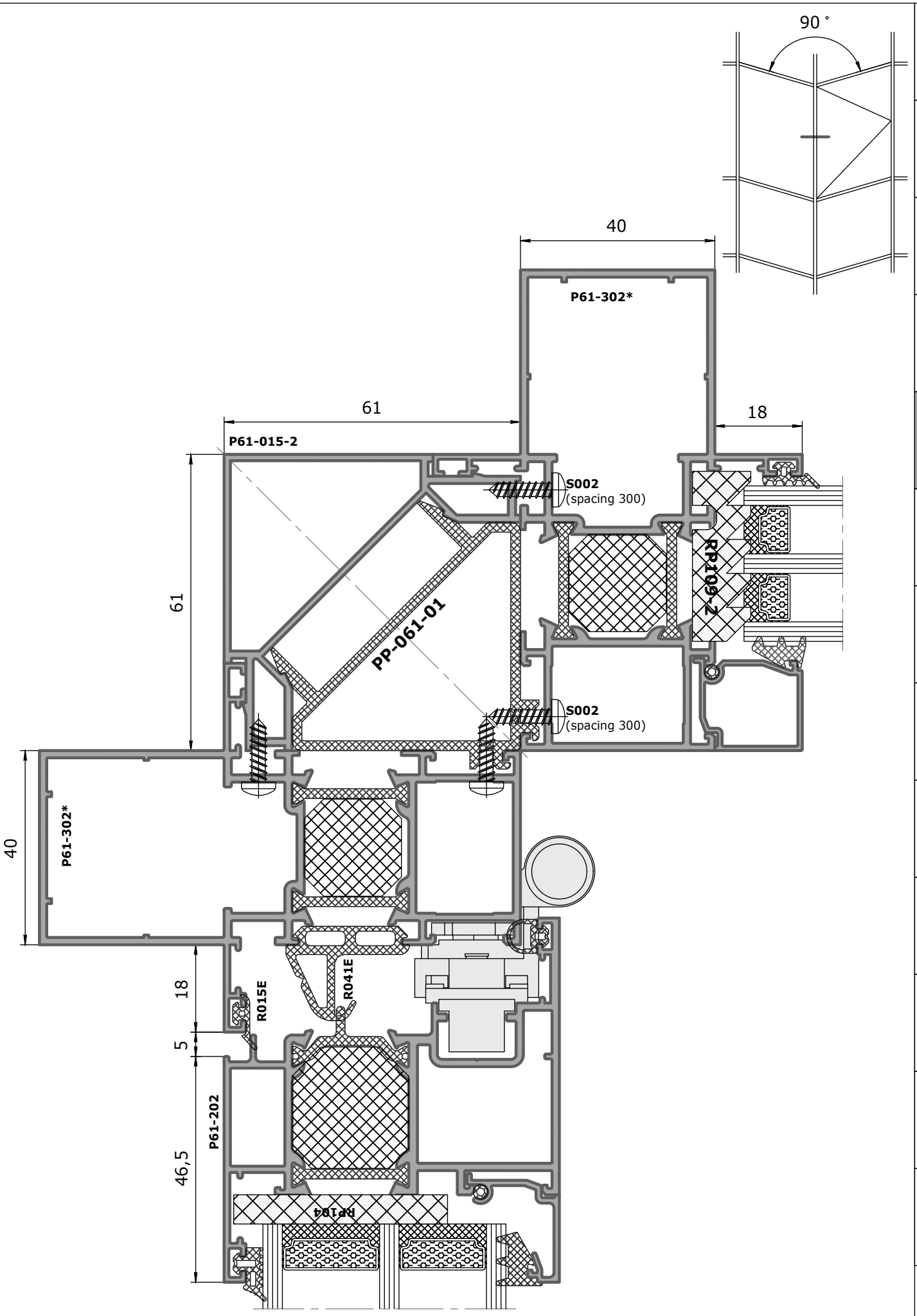

contents
profiles
delivery set
profiles (1:1)
sections
glazing tables
sub-assemblies tables
fitting arrangements
additional solutions
sub-assemblies
fire-resistant structures
connections
equipment and tools

contents
profiles
delivery set
profiles (1:1)
sections
glazing tables
sub-assemblies tables
fitting arrangements
additional solutions
sub-assemblies
fire-resistant structures
connections
equipment and tools

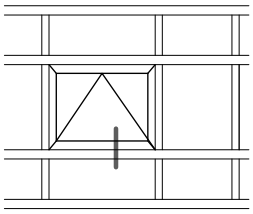

assembly is shown rotated

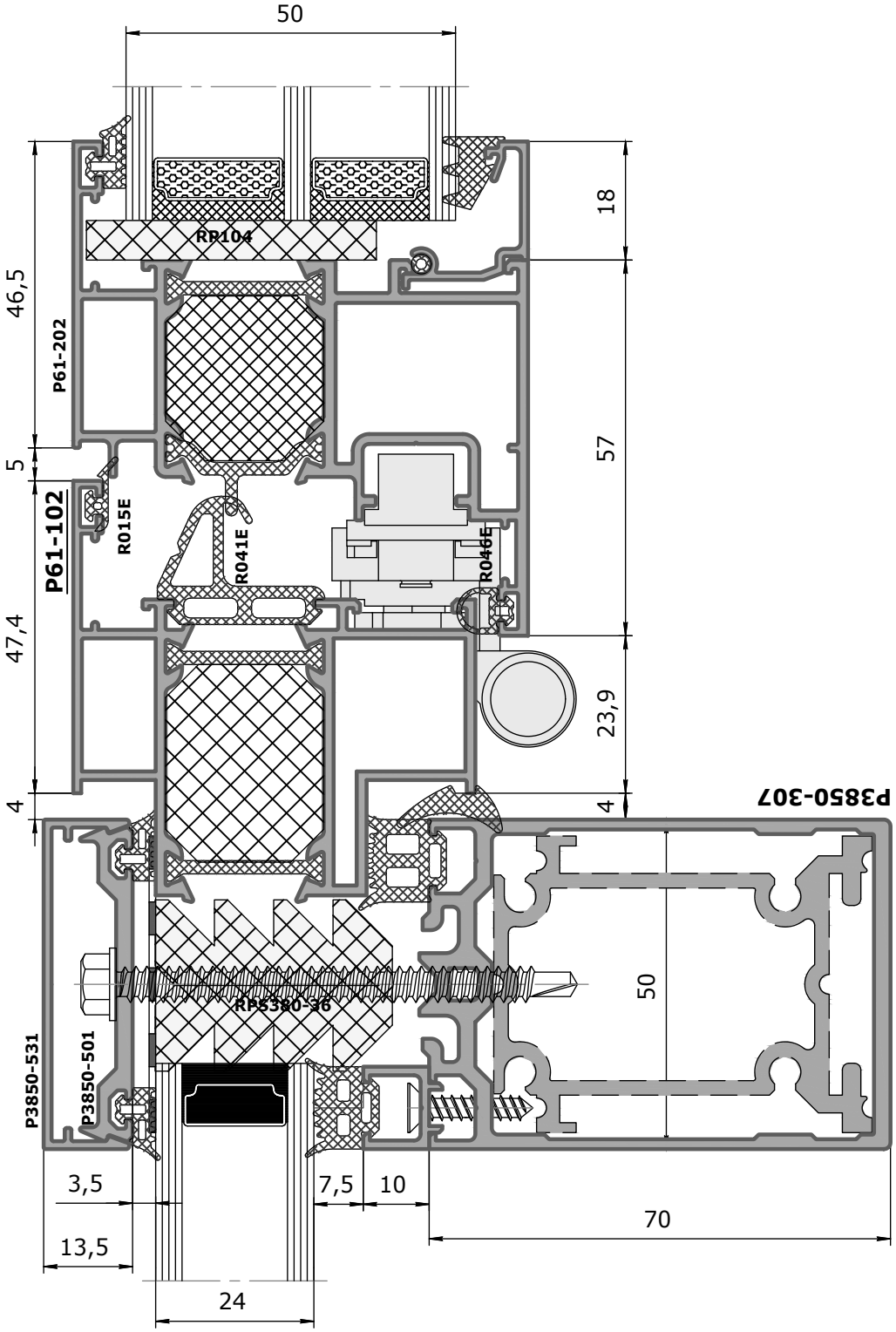

contents
profiles
delivery set
profiles (1:1)
sections
glazing tables
sub-assemblies tables
fitting arrangements
additional solutions
sub-assemblies
fire-resistant structures
connections
equipment and tools

contents
profiles
delivery set
profiles (1:1)
sections
glazing tables
sub-assemblies tables
fitting arrangements
additional solutions
sub-assemblies
fire-resistant structures
connections
equipment and tools

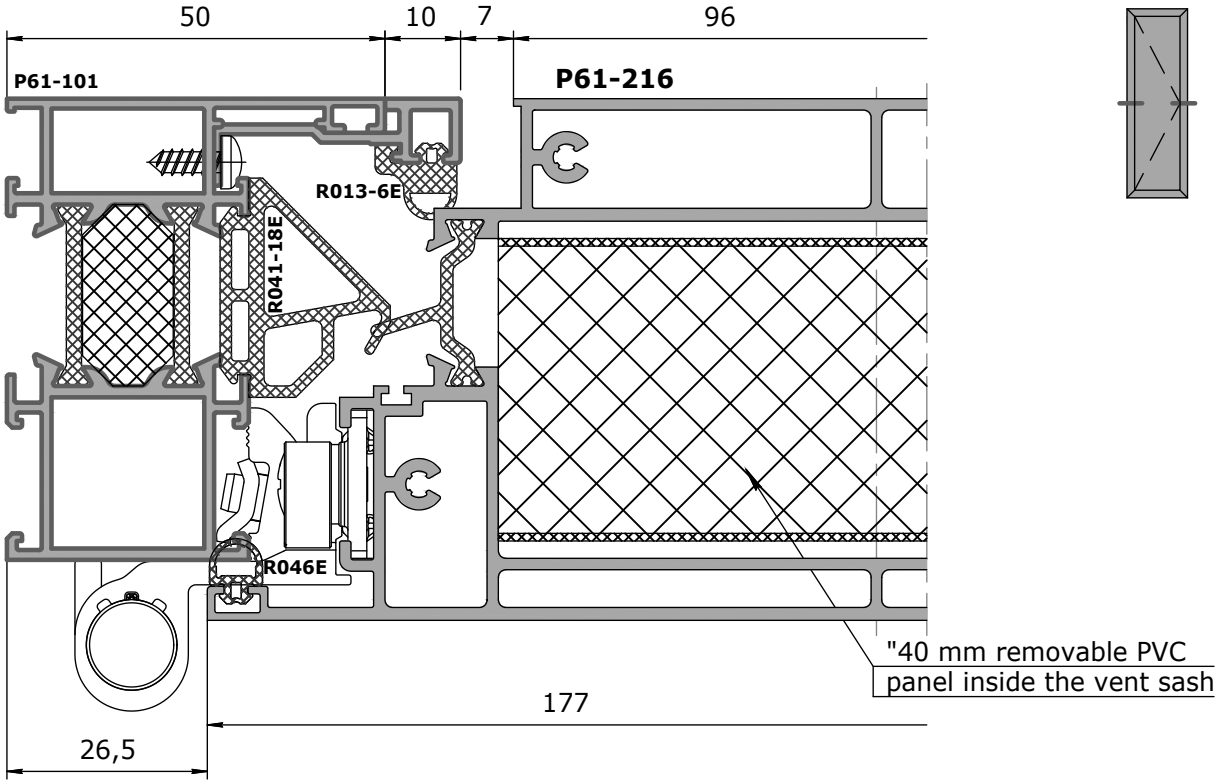

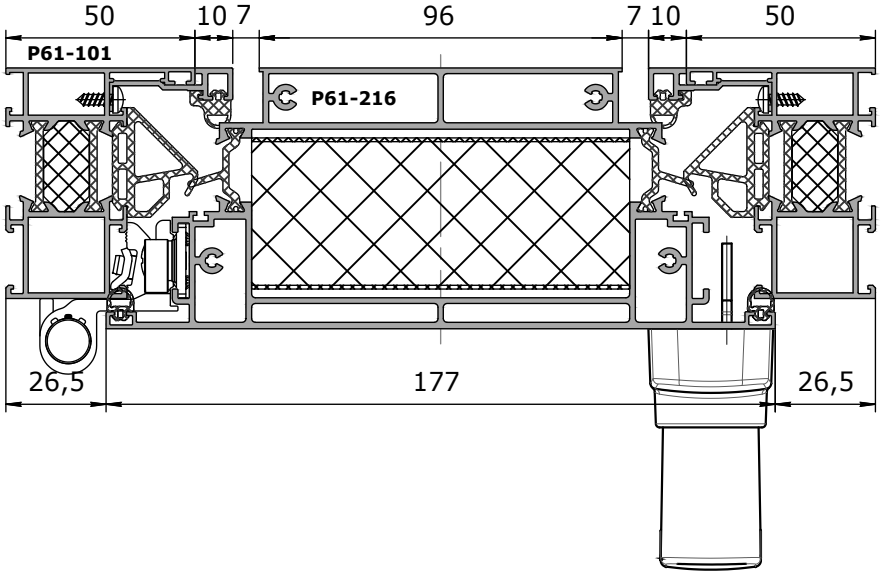

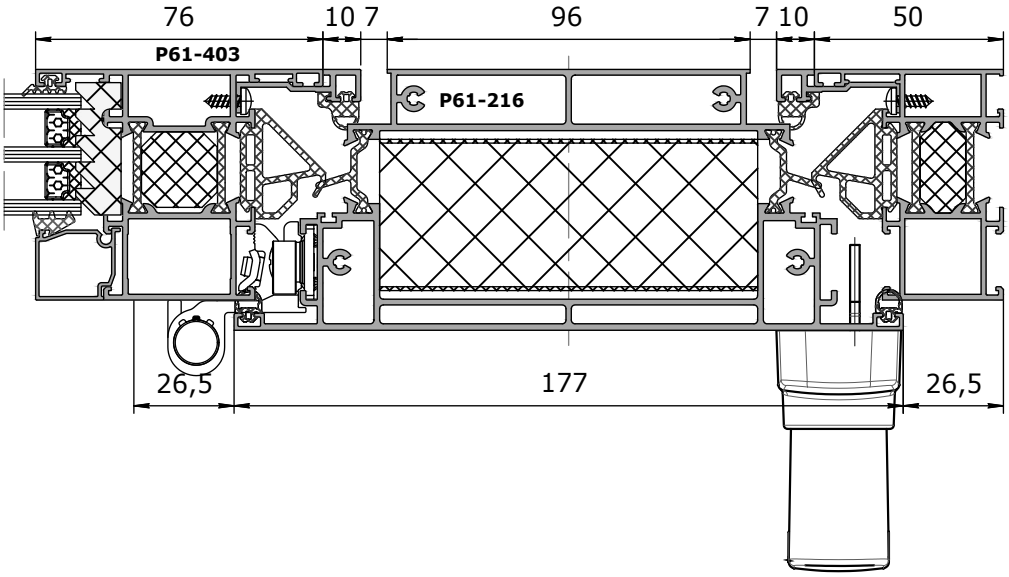

contents
profiles
delivery set
profiles (1:1)
sections
glazing tables
sub-assemblies tables
fitting arrangements
additional solutions
sub-assemblies
fire-resistant structures
connections
equipment and tools

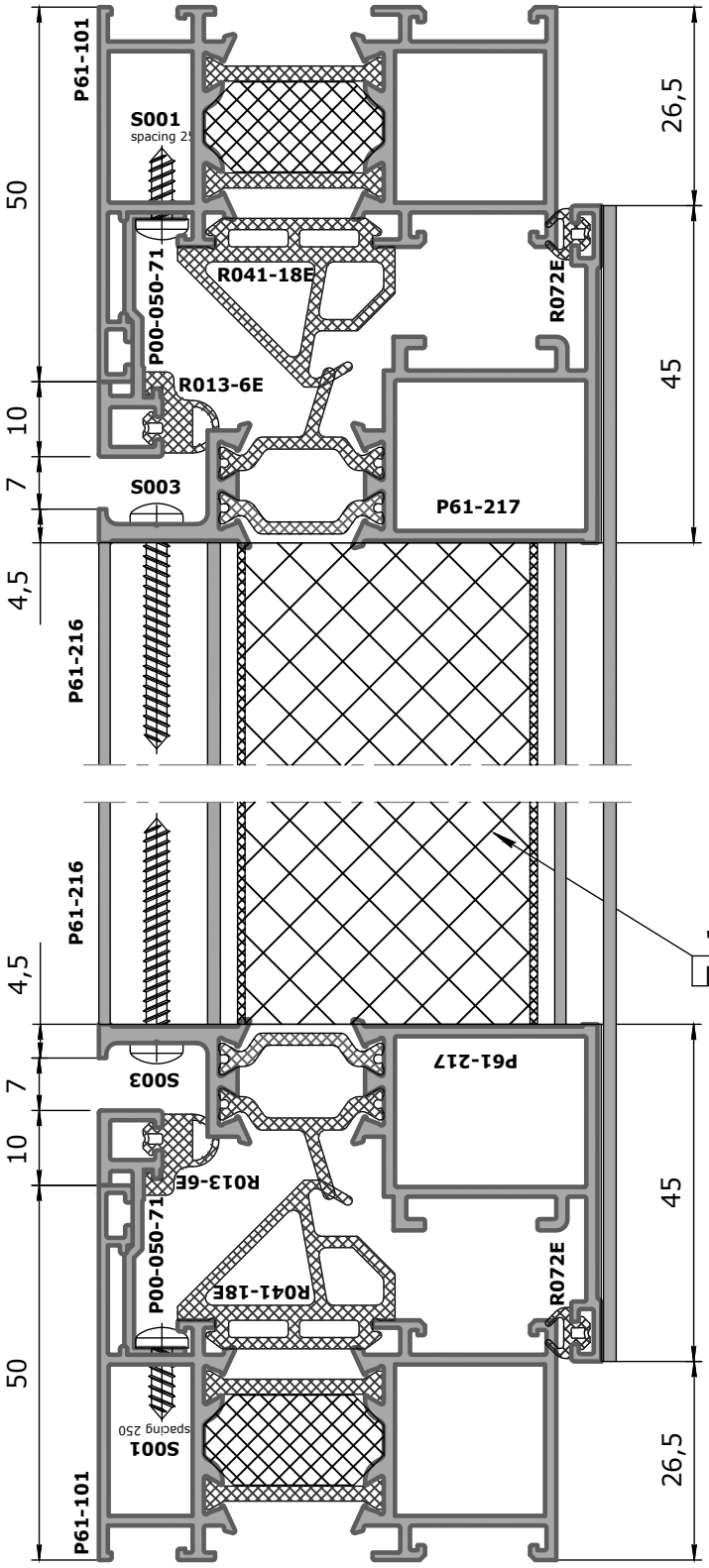

contents
profiles
delivery set
profiles (1:1)
sections
glazing tables
sub-assemblies tables
fitting arrangements
additional solutions
sub-assemblies
fire-resistant structures
connections
equipment and tools

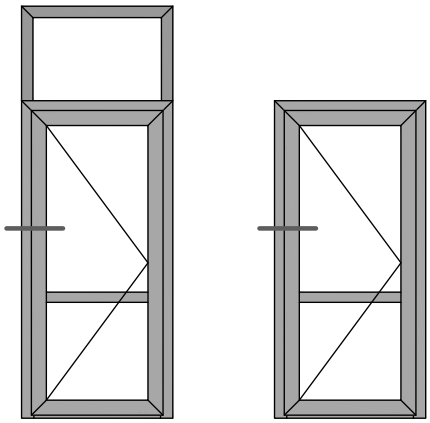

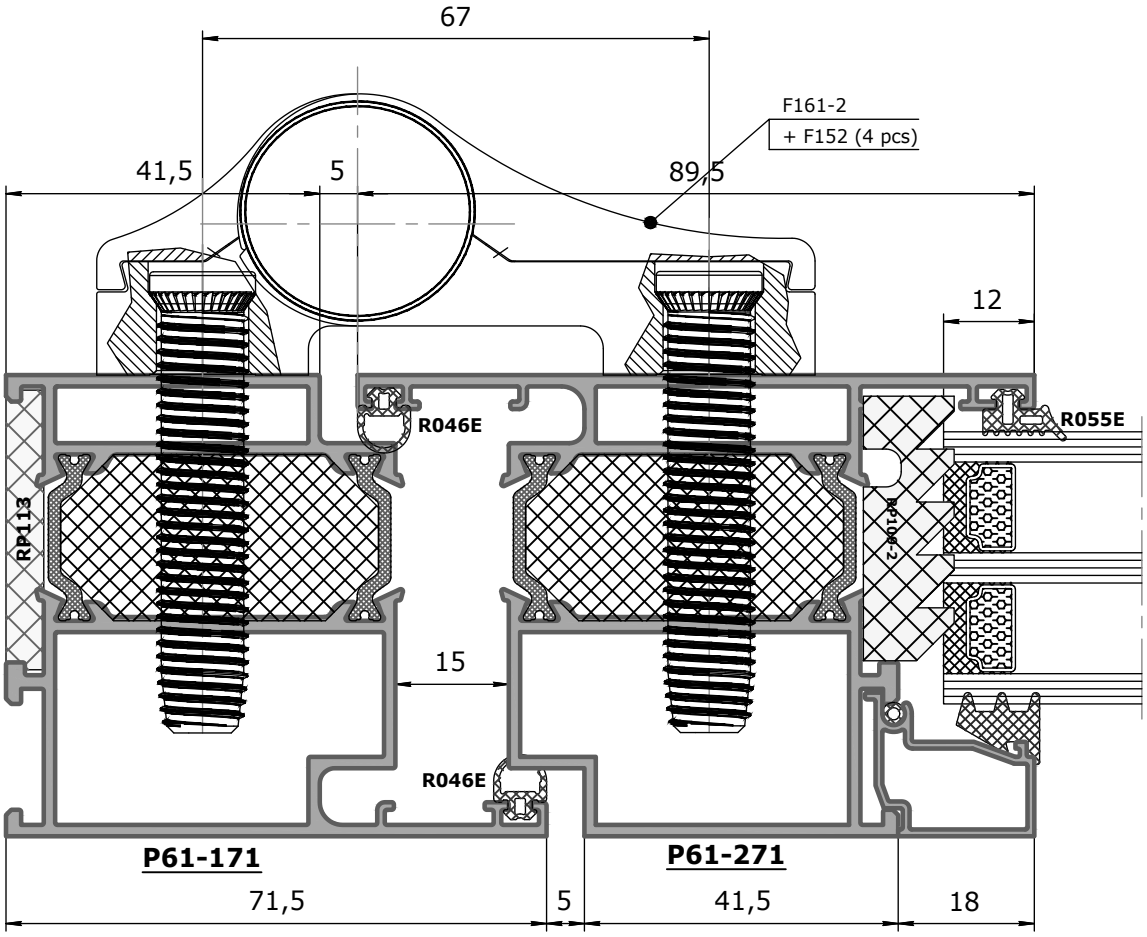

contents
profiles
delivery set
profiles (1:1)
sections
glazing tables
sub-assemblies tables
fitting arrangements
additional solutions
sub-assemblies
fire-resistant structures
connections
equipment and tools

contents
profiles
delivery set
profiles (1:1)
sections
glazing tables
sub-assemblies tables
fitting arrangements
additional solutions
sub-assemblies
fire-resistant structures
connections
equipment and tools

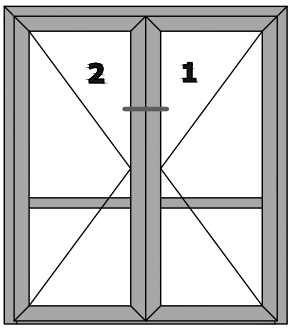

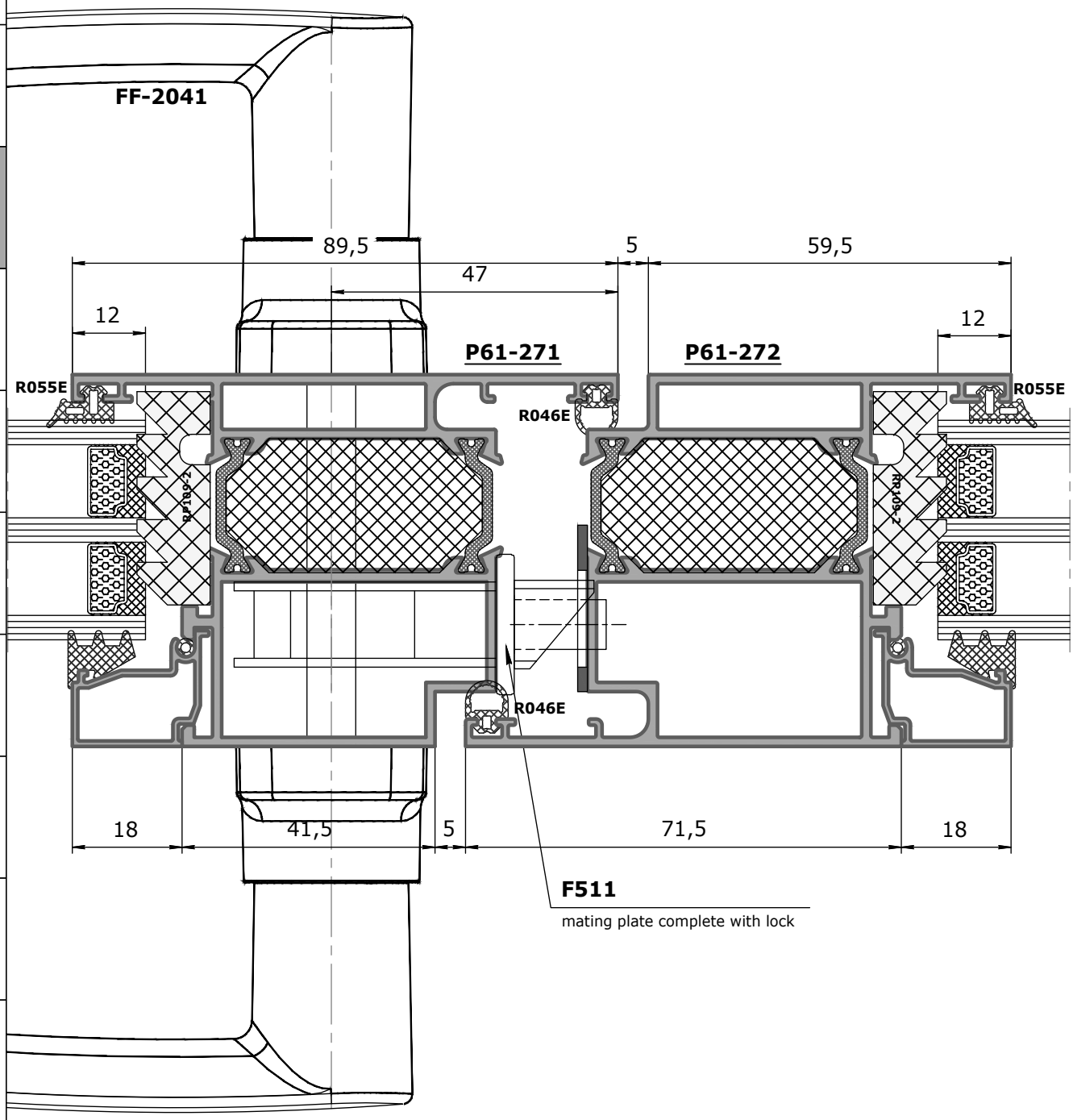

contents
profiles
delivery set
profiles (1:1)
sections
glazing tables
sub-assemblies tables
fitting arrangements
additional solutions
sub-assemblies
fire-resistant structures
connections
equipment and tools

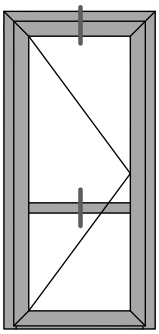

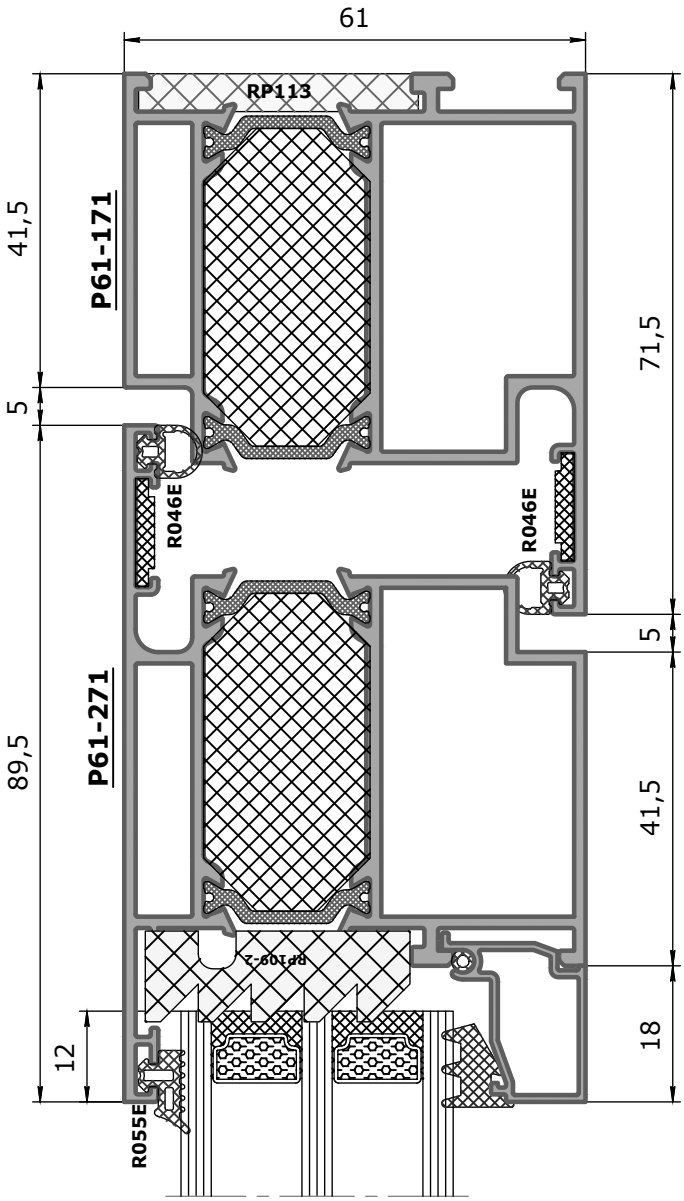

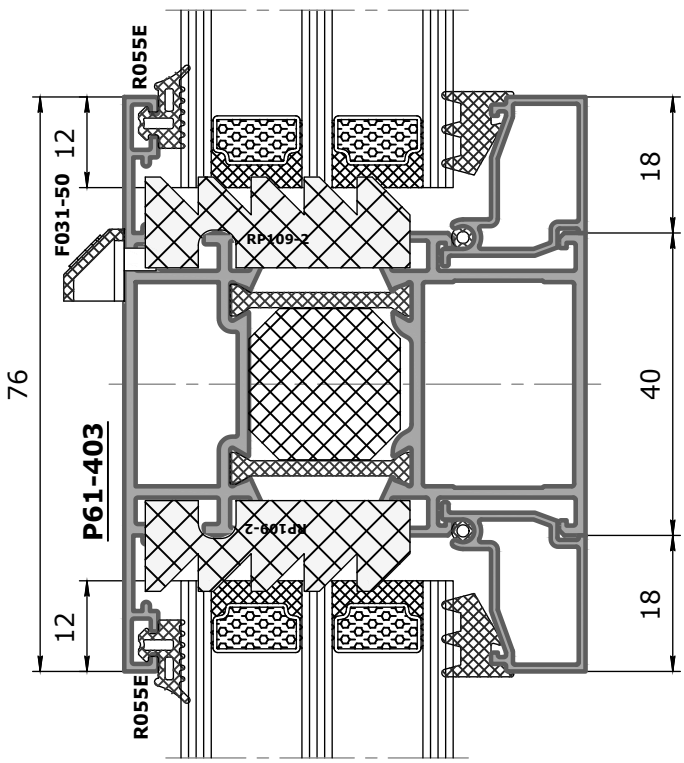

contents
profiles
delivery set
profiles (1:1)
sections
glazing tables
sub-assemblies tables
fitting arrangements
additional solutions
sub-assemblies
fire-resistant structures
connections
equipment and tools

contents
profiles
delivery set
profiles (1:1)
sections
glazing tables
sub-assemblies tables
fitting arrangements
additional solutions
sub-assemblies
fire-resistant structures
connections
equipment and tools

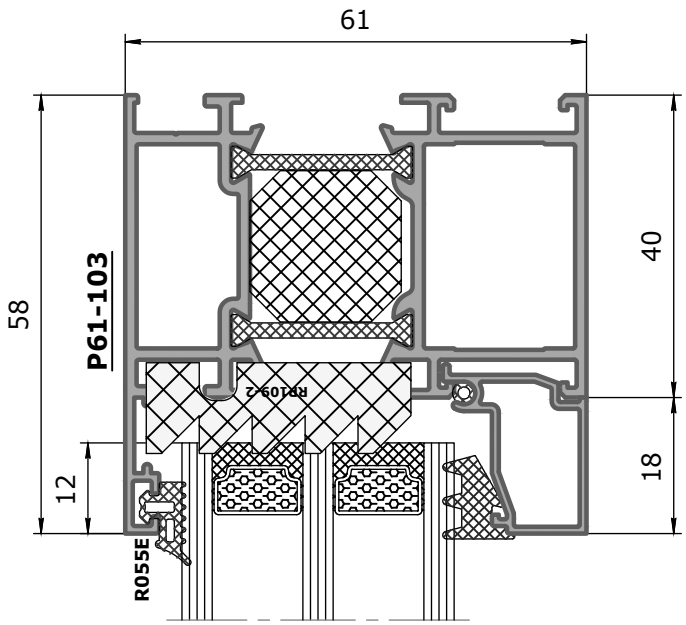

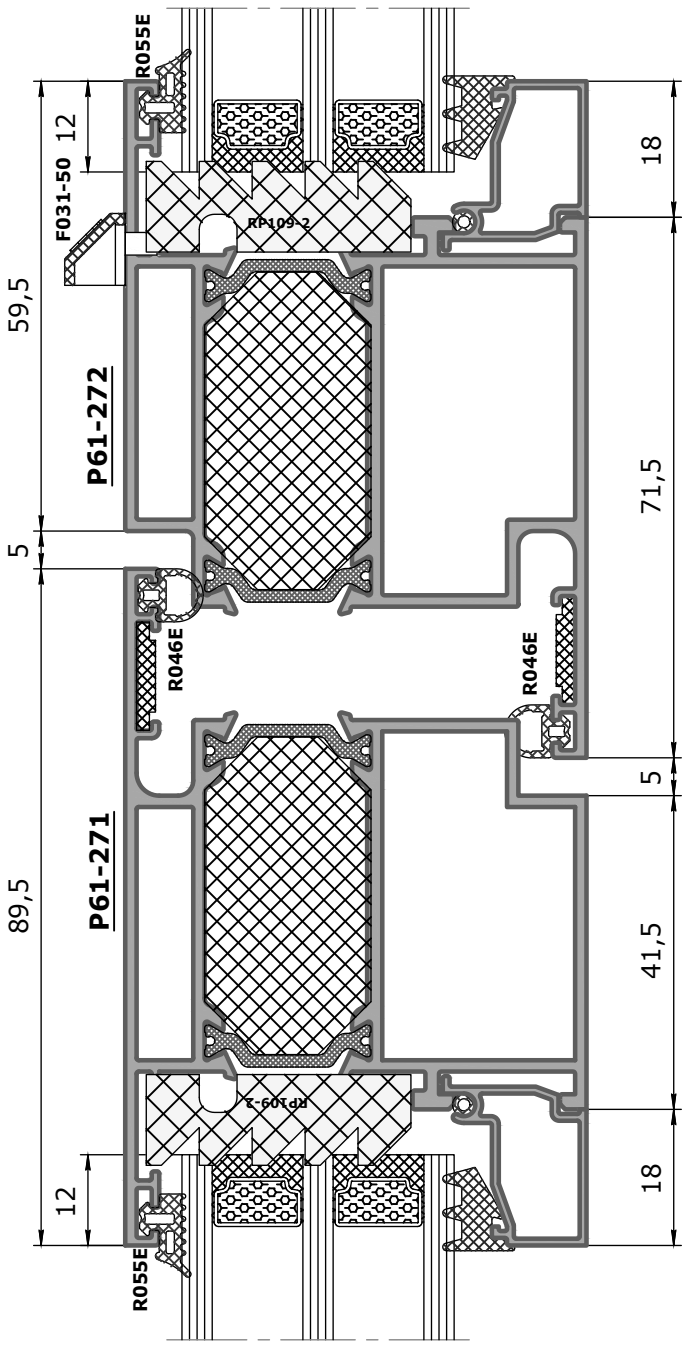

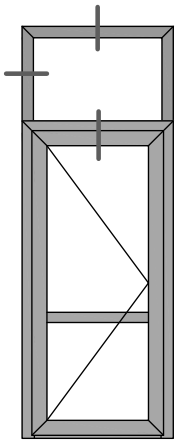

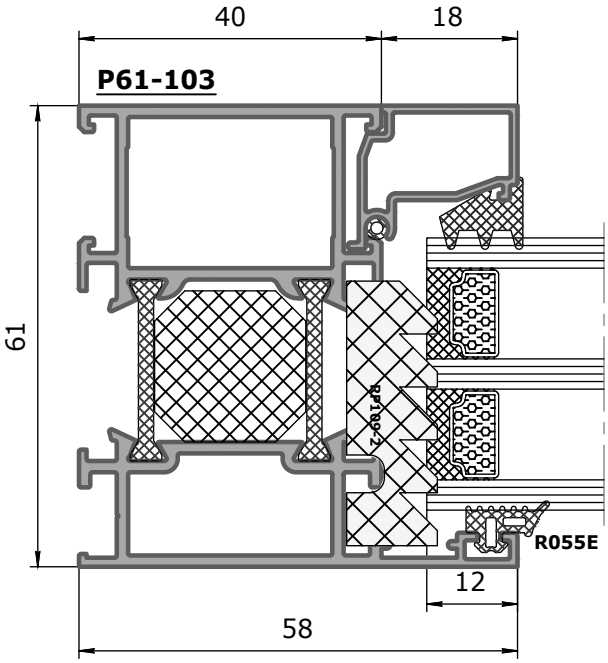

contents
profiles
delivery set
profiles (1:1)
sections
glazing tables
sub-assemblies tables
fitting arrangements
additional solutions
sub-assemblies
fire-resistant structures
connections
equipment and tools

contents
profiles
delivery set
profiles (1:1)
sections
glazing tables
sub-assemblies tables
fitting arrangements
additional solutions
sub-assemblies
fire-resistant structures
connections
equipment and tools

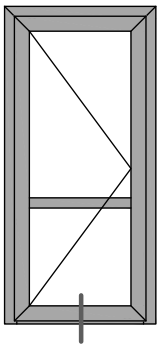

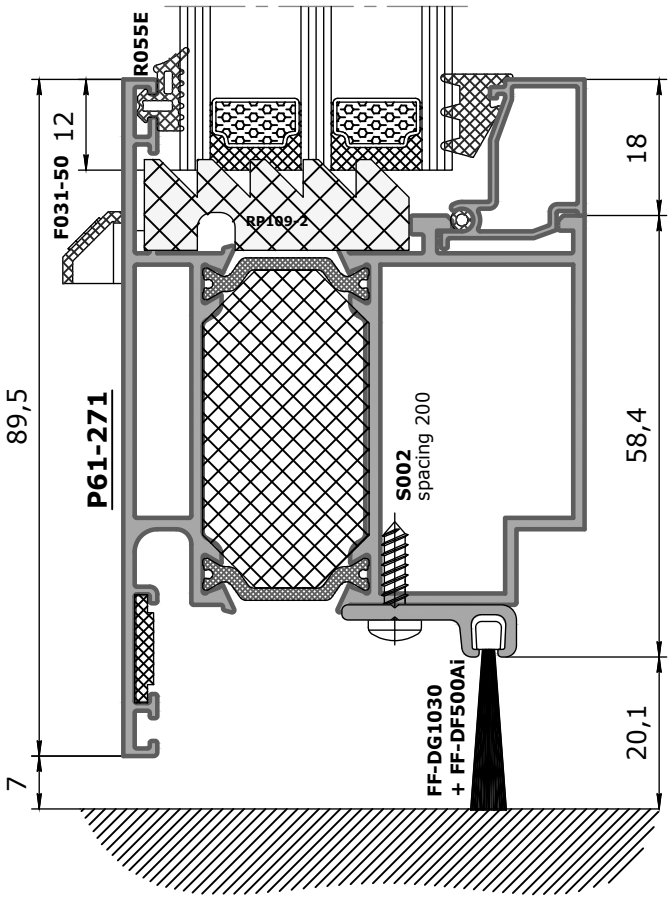

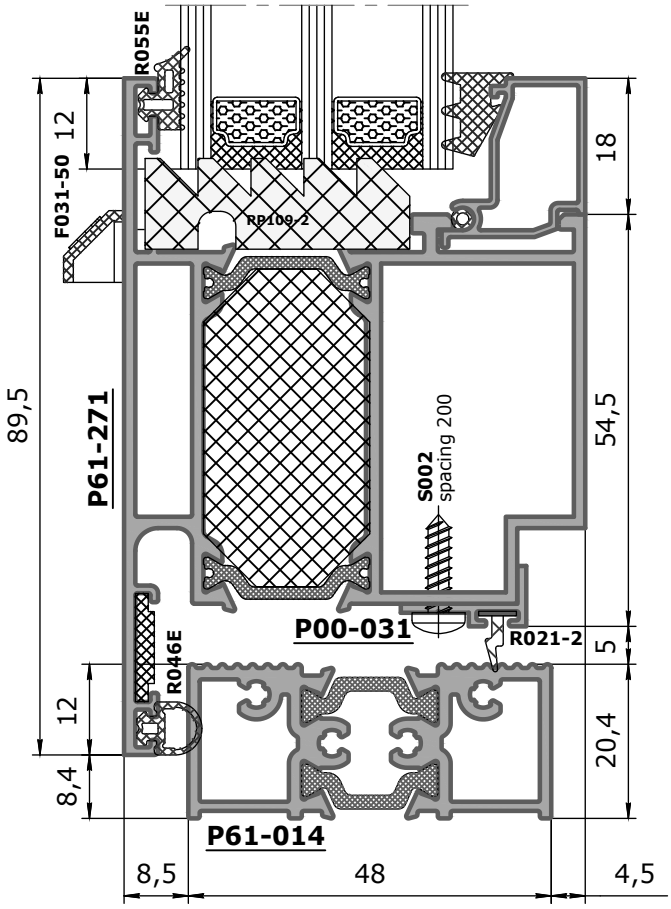

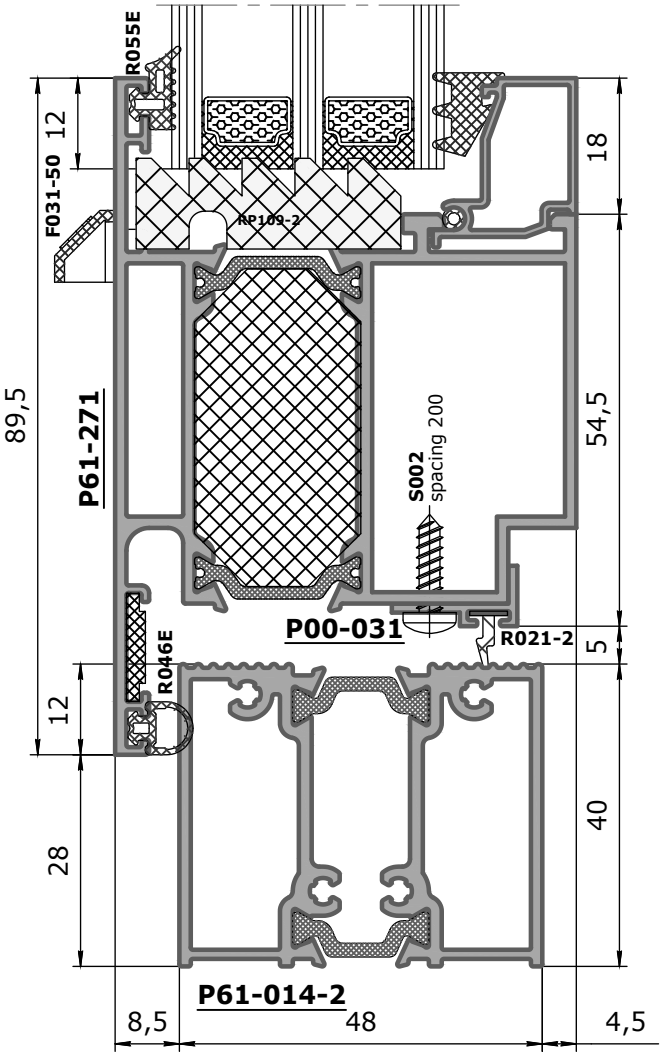

contents
profiles
delivery set
profiles (1:1)
sections
glazing tables
sub-assemblies tables
fitting arrangements
additional solutions
sub-assemblies
fire-resistant structures
connections
equipment and tools

contents
profiles
delivery set
profiles (1:1)
sections
glazing tables
sub-assemblies tables
fitting arrangements
additional solutions
sub-assemblies
fire-resistant structures
connections
equipment and tools

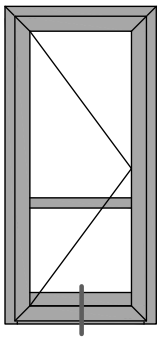

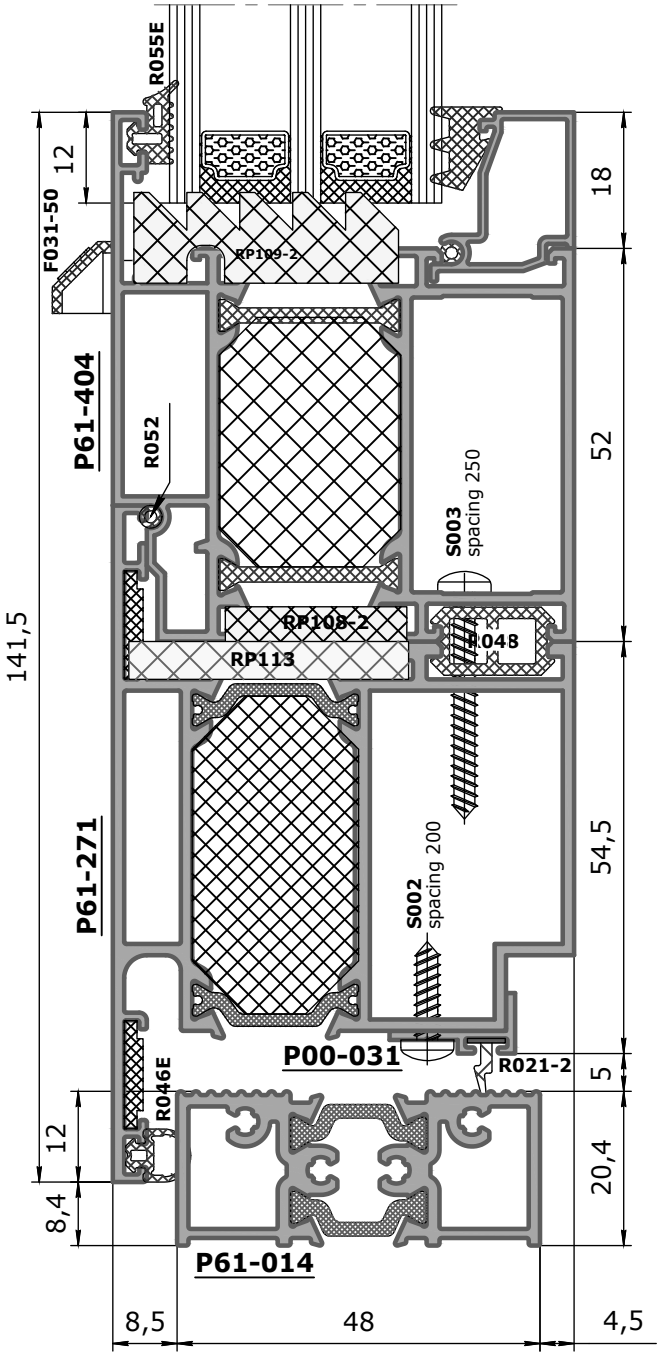

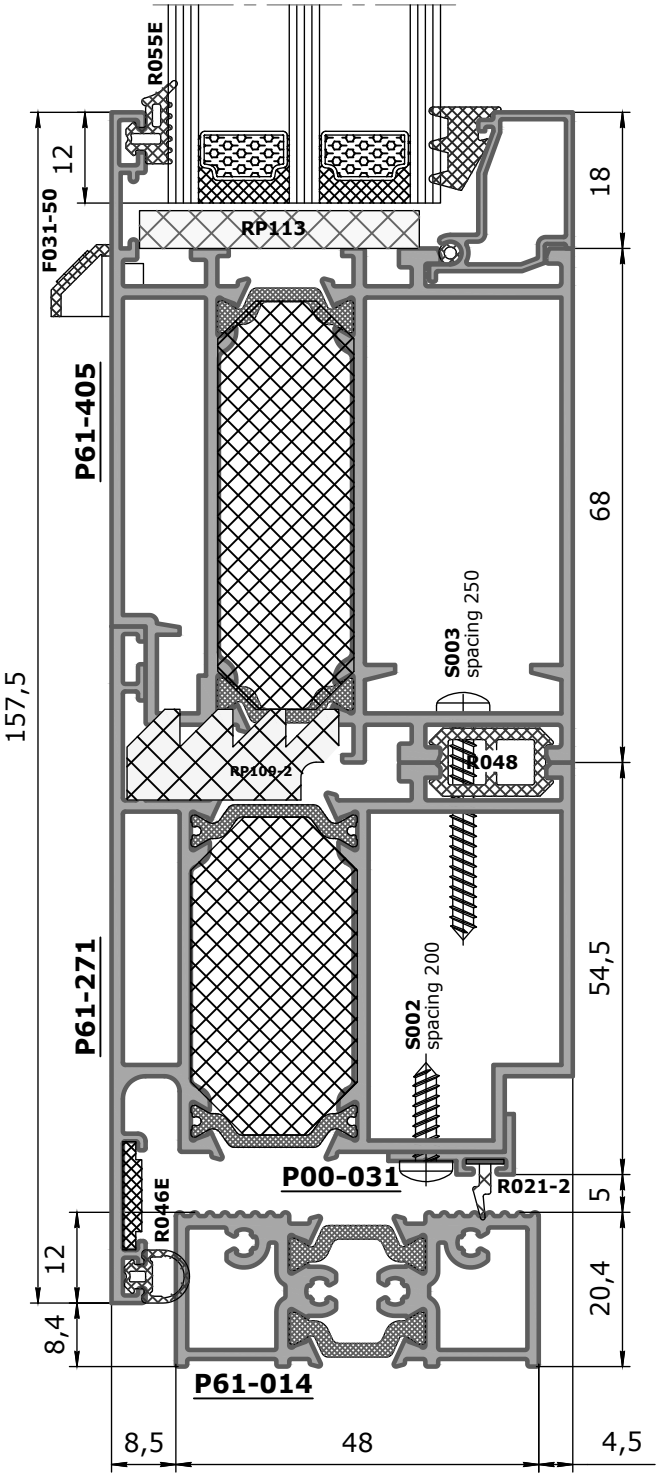

contents
profiles
delivery set
profiles (1:1)
sections
glazing tables
sub-assemblies tables
fitting arrangements
additional solutions
sub-assemblies
fire-resistant structures
connections
equipment and tools

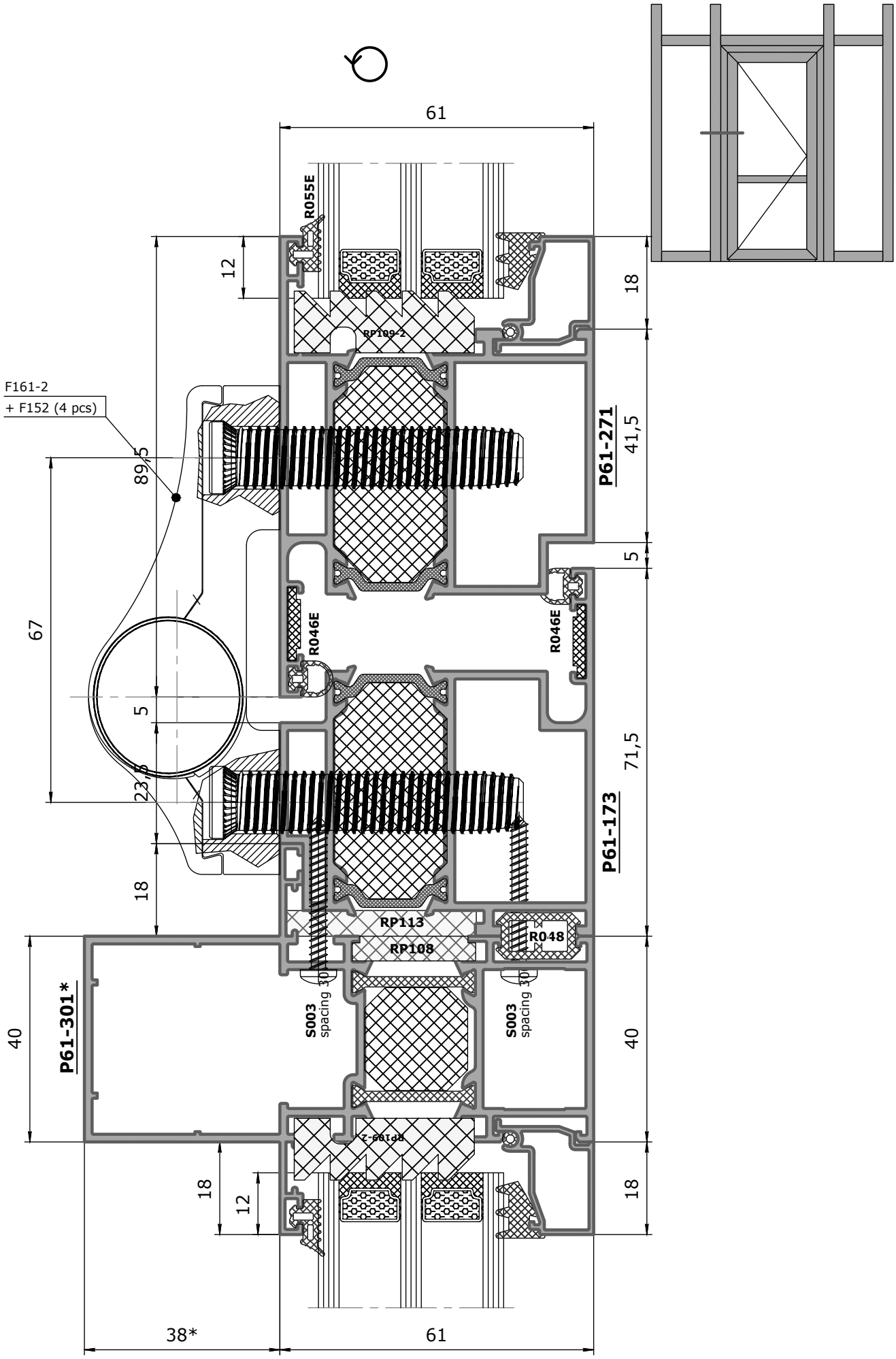

contents
profiles
delivery set
profiles (1:1)
sections
glazing tables
sub-assemblies tables
fitting arrangements
additional solutions
sub-assemblies
fire-resistant structures
connections
equipment and tools

contents
profiles
delivery set
profiles (1:1)
sections
glazing tables
sub-assemblies tables
fitting arrangements
additional solutions
sub-assemblies
fire-resistant structures
connections
equipment and tools

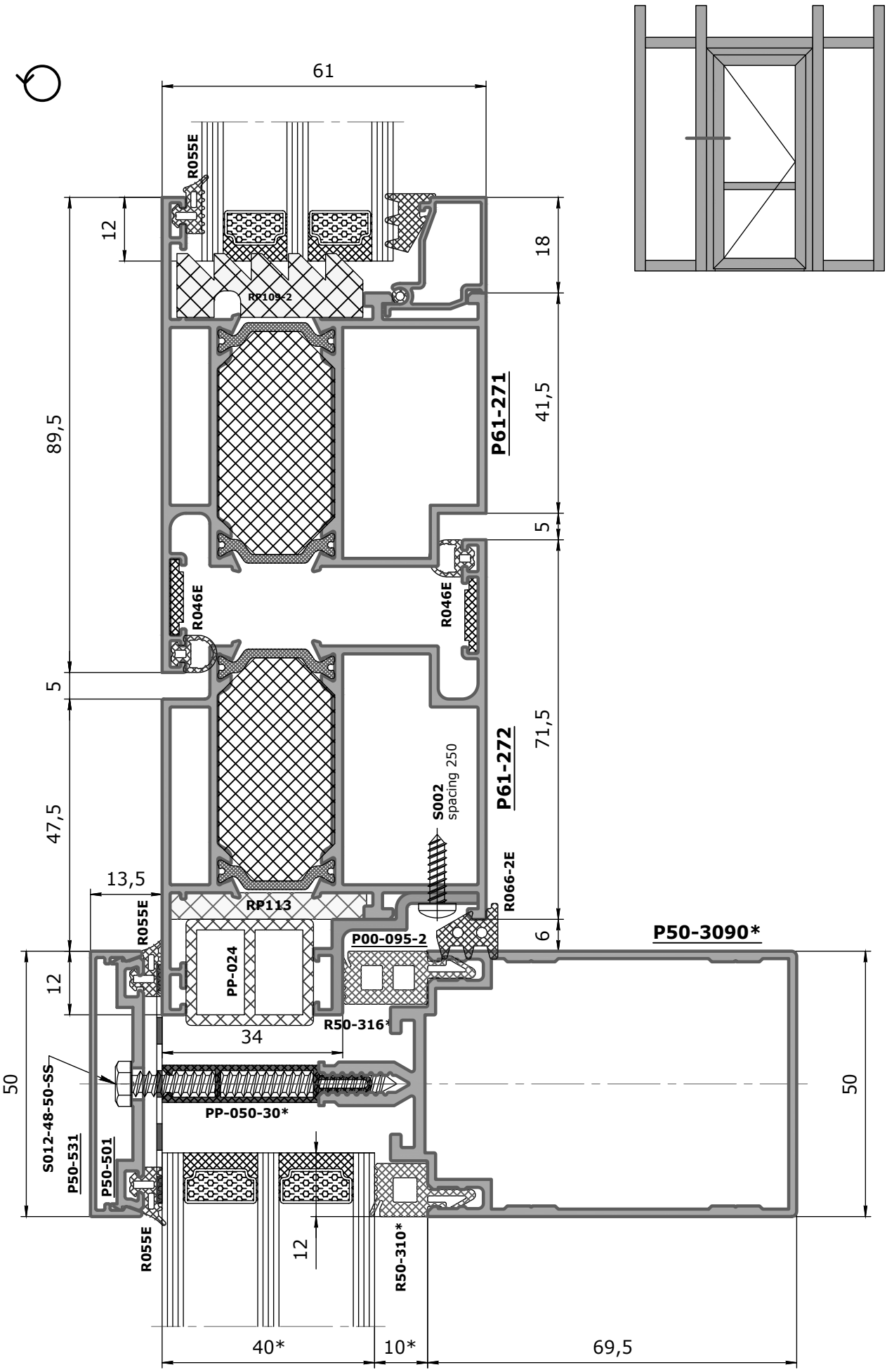

contents
profiles
delivery set
profiles (1:1)
sections
glazing tables
sub-assemblies tables
fitting arrangements
additional solutions
sub-assemblies
fire-resistant structures
connections
equipment and tools

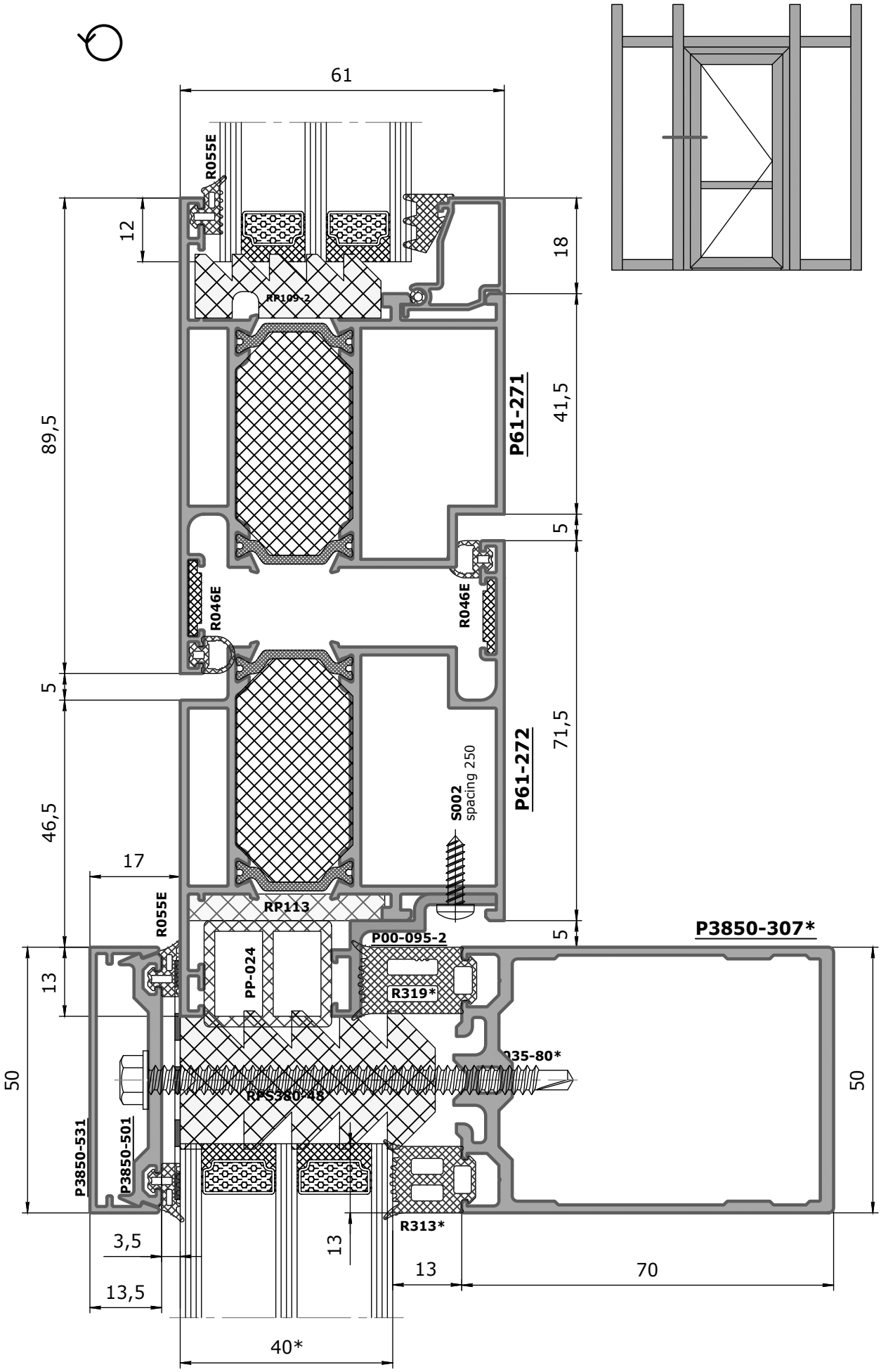

contents
profiles
delivery set
profiles (1:1)
sections
glazing tables
sub-assemblies tables
fitting arrangements
additional solutions
sub-assemblies
fire-resistant structures
connections
equipment and tools

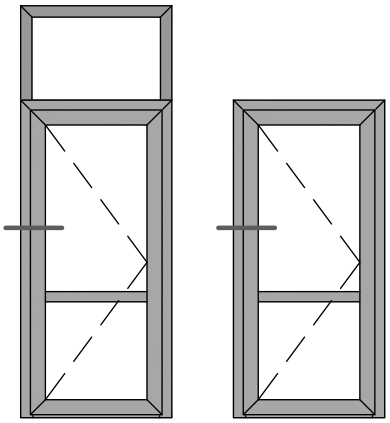

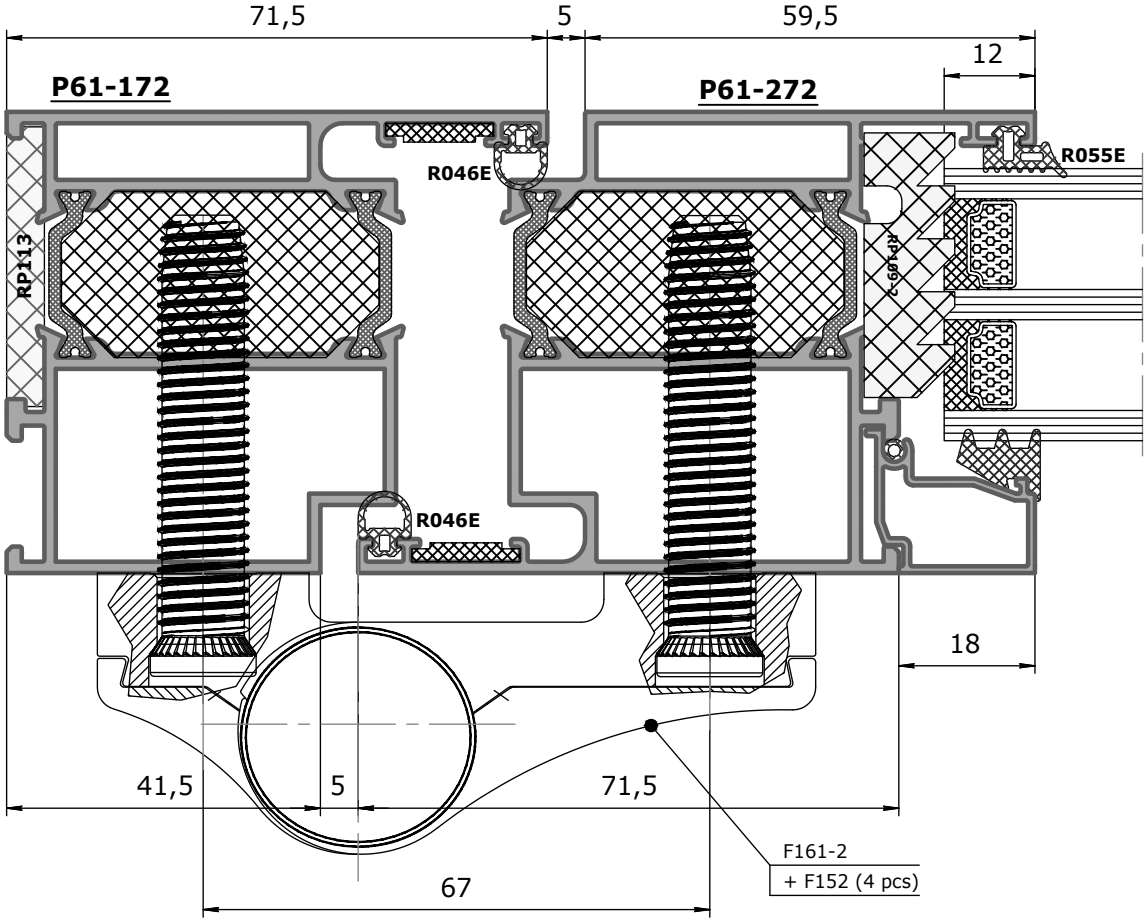

contents
profiles
delivery set
profiles (1:1)
sections
glazing tables
sub-assemblies tables
fitting arrangements
additional solutions
sub-assemblies
fire-resistant structures
connections
equipment and tools

contents
profiles
delivery set
profiles (1:1)
sections
glazing tables
sub-assemblies tables
fitting arrangements
additional solutions
sub-assemblies
fire-resistant structures
connections
equipment and tools

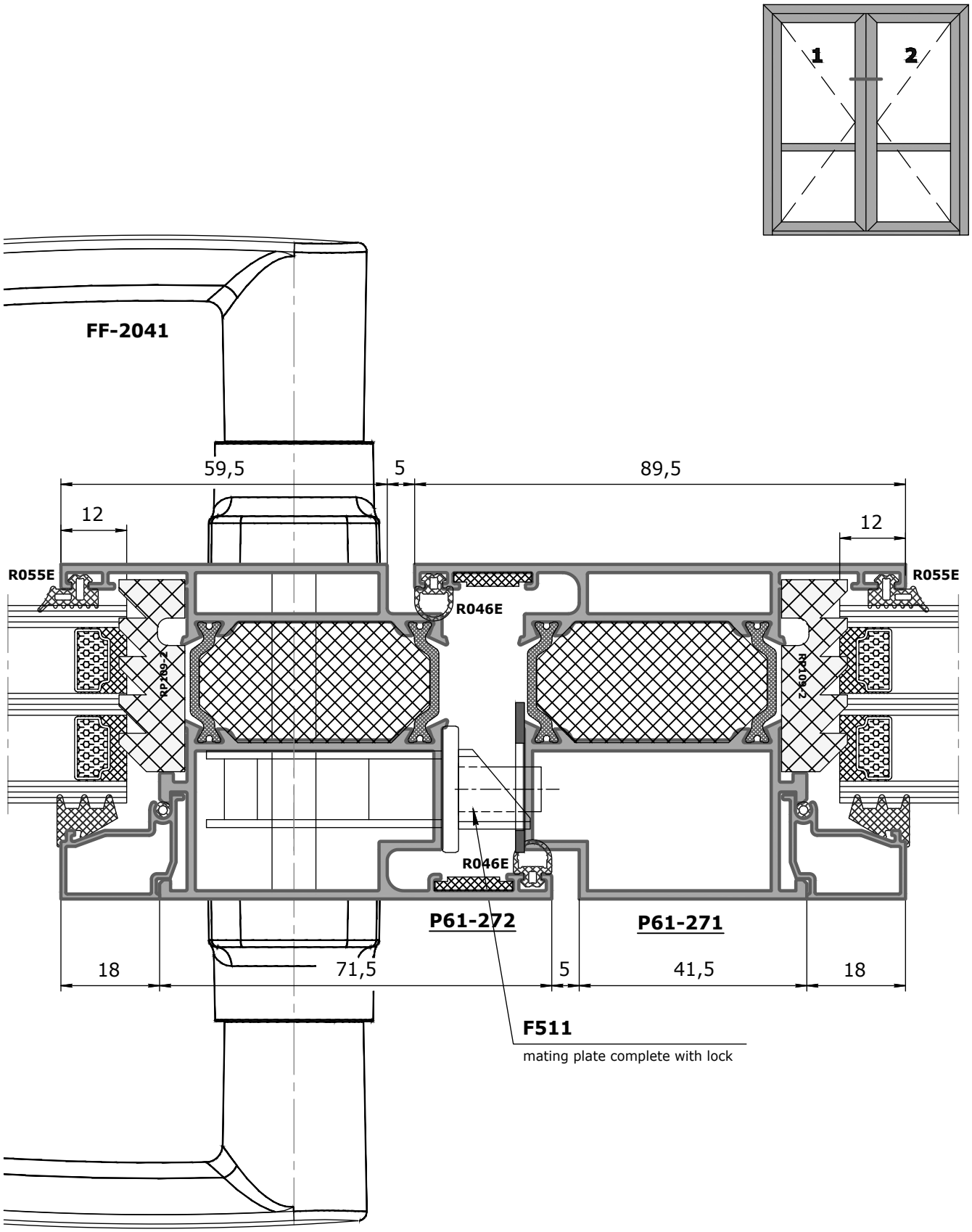

contents
profiles
delivery set
profiles (1:1)
sections
glazing tables
sub-assemblies tables
fitting arrangements
additional solutions
sub-assemblies
fire-resistant structures
connections
equipment and tools

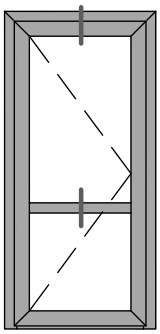

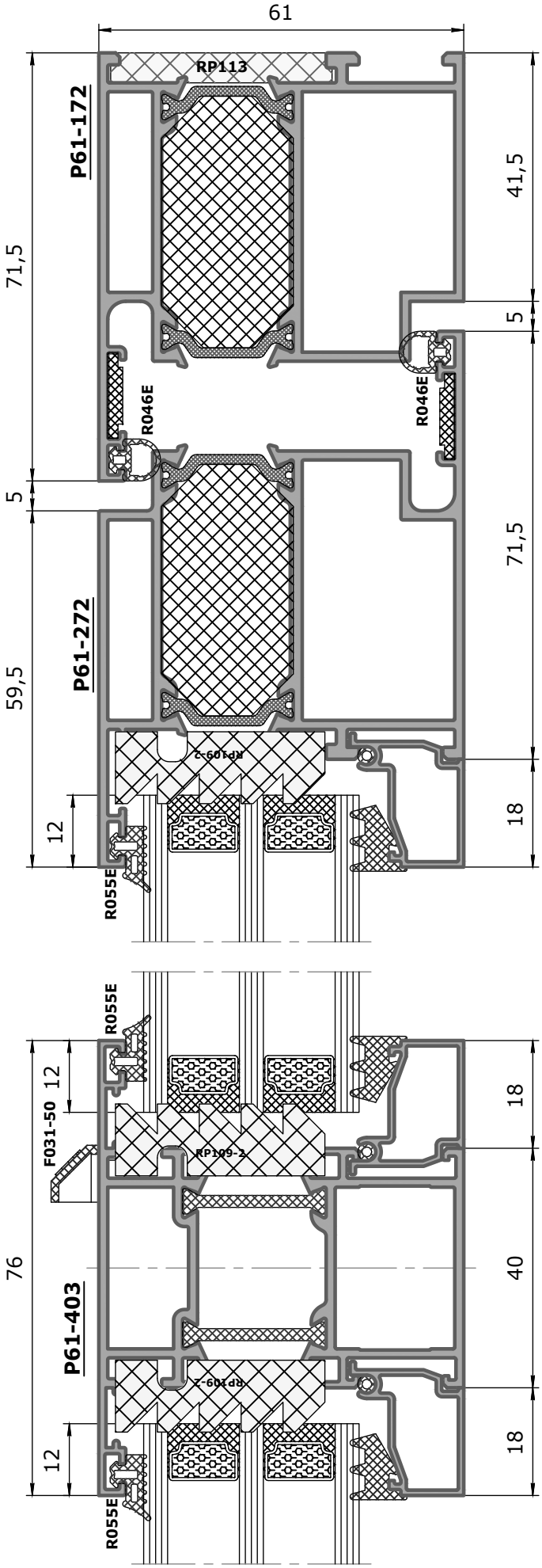

contents
profiles
delivery set
profiles (1:1)
sections
glazing tables
sub-assemblies tables
fitting arrangements
additional solutions
sub-assemblies
fire-resistant structures
connections
equipment and tools

contents
profiles
delivery set
profiles (1:1)
sections
glazing tables
sub-assemblies tables
fitting arrangements
additional solutions
sub-assemblies
fire-resistant structures
connections
equipment and tools

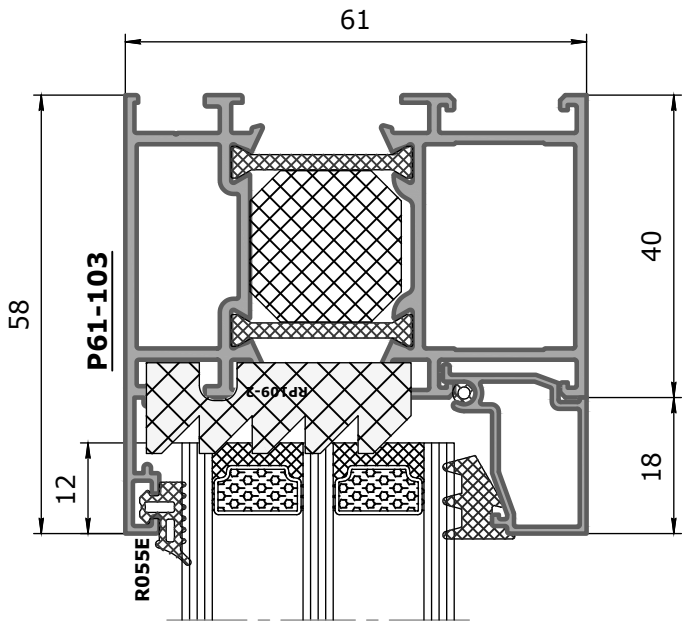

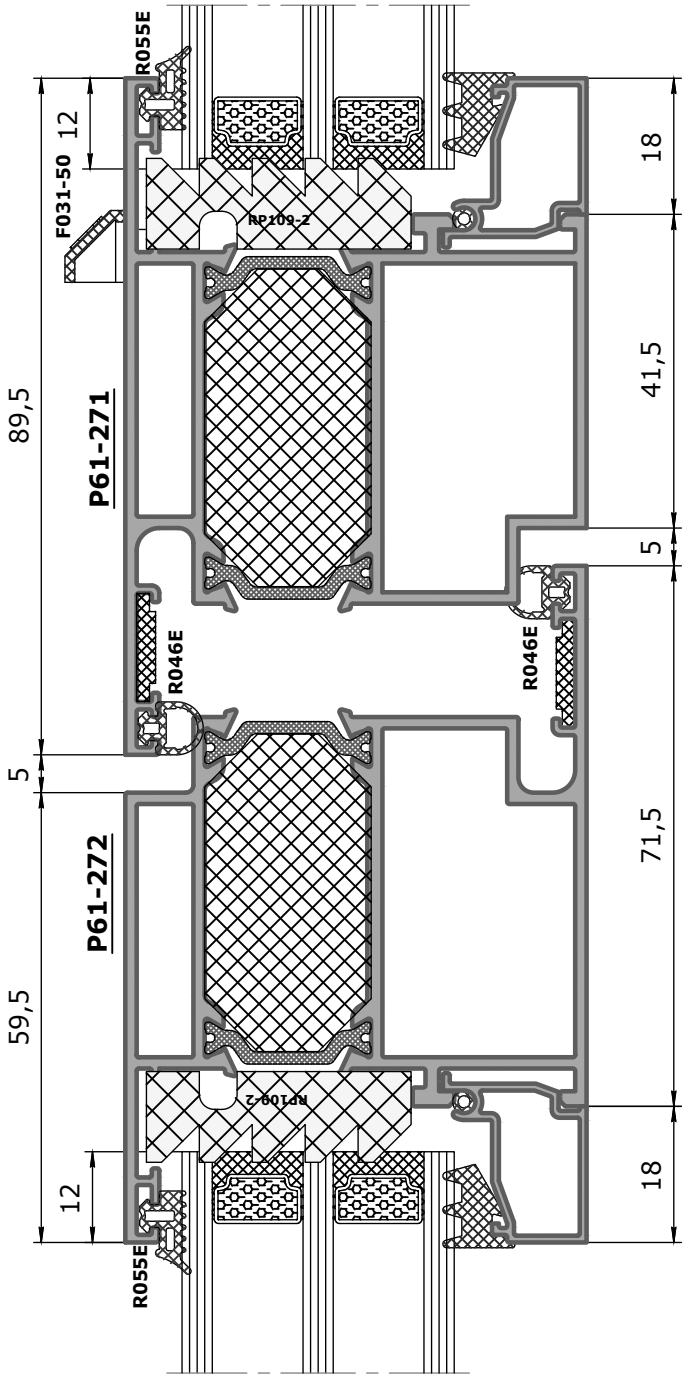

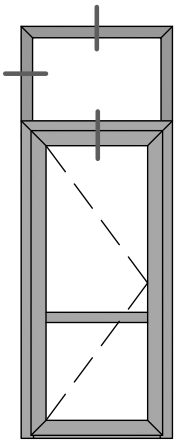

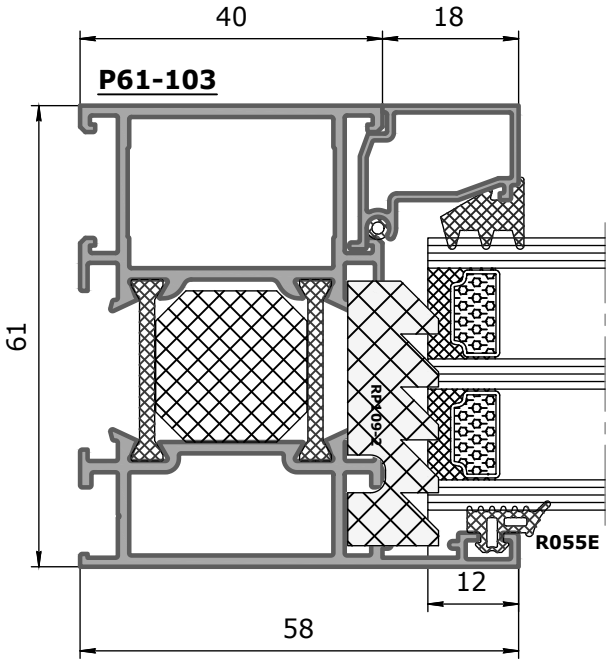

contents
profiles
delivery set
profiles (1:1)
sections
glazing tables
sub-assemblies tables
fitting arrangements
additional solutions
sub-assemblies
fire-resistant structures
connections
equipment and tools

contents
profiles
delivery set
profiles (1:1)
sections
glazing tables
sub-assemblies tables
fitting arrangements
additional solutions
sub-assemblies
fire-resistant structures
connections
equipment and tools

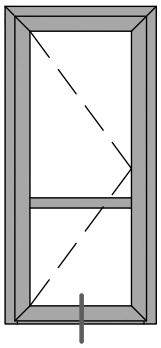

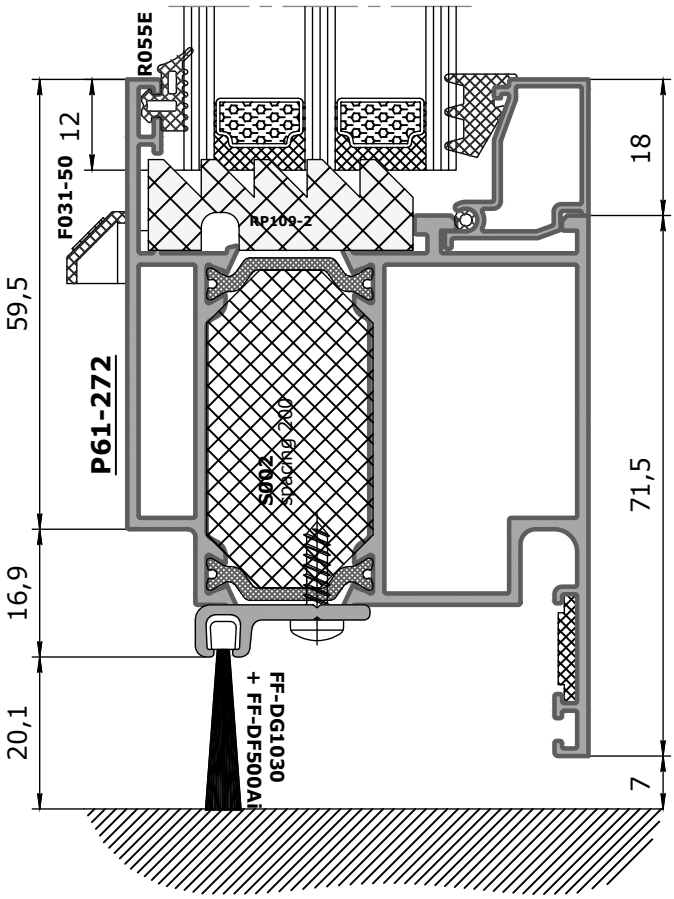

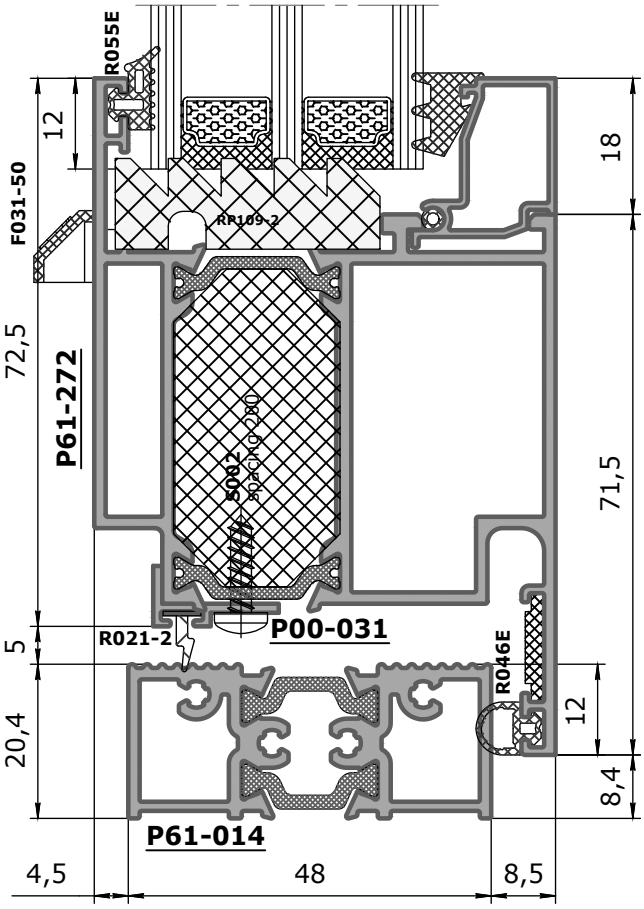

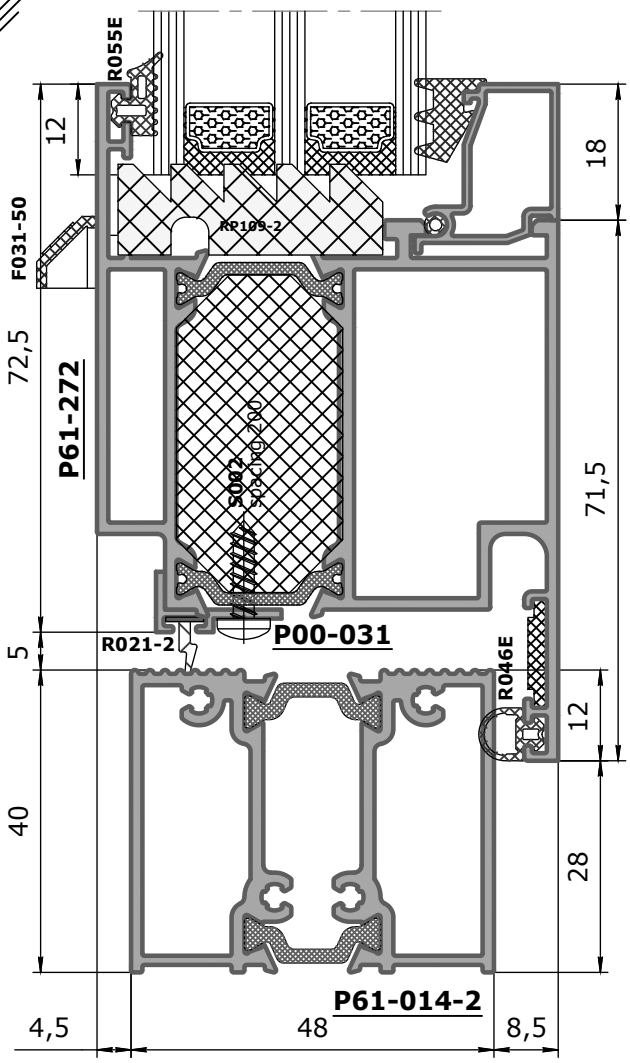

contents
profiles
delivery set
profiles (1:1)
sections
glazing tables
sub-assemblies tables
fitting arrangements
additional solutions
sub-assemblies
fire-resistant structures
connections
equipment and tools

contents
profiles
delivery set
profiles (1:1)
sections
glazing tables
sub-assemblies tables
fitting arrangements
additional solutions
sub-assemblies
fire-resistant structures
connections
equipment and tools

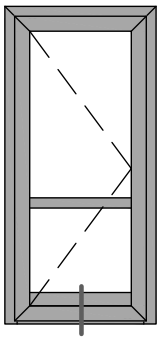

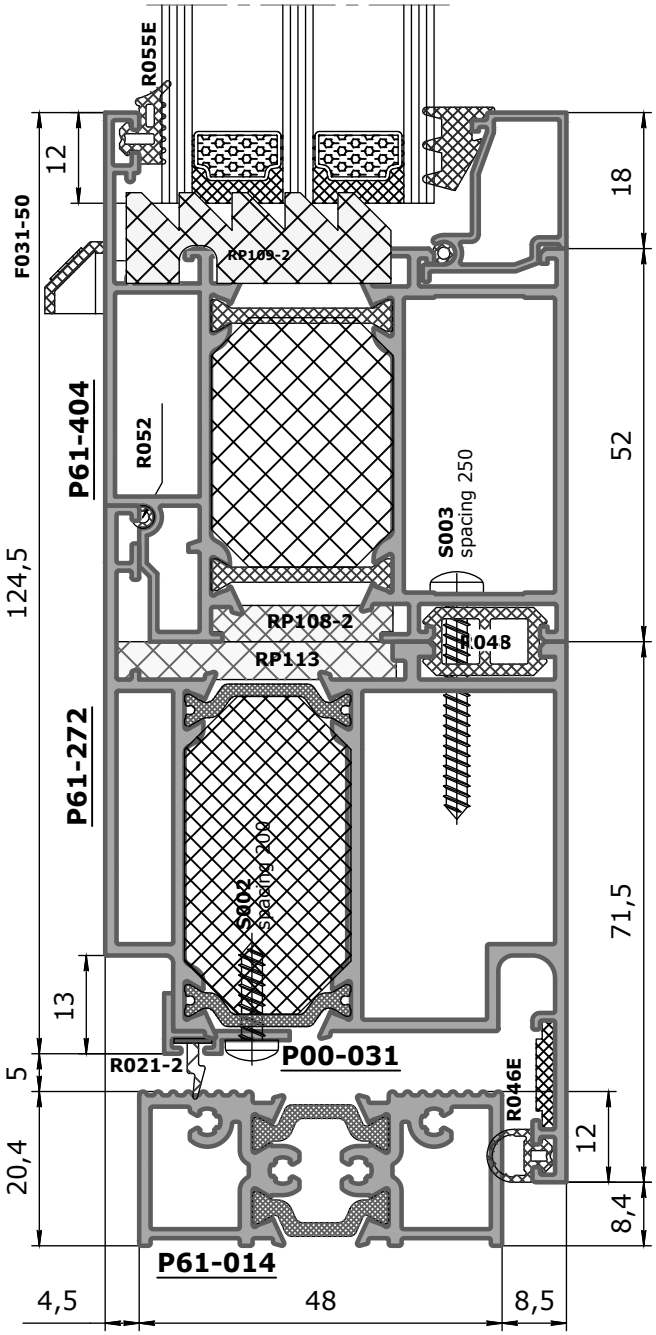

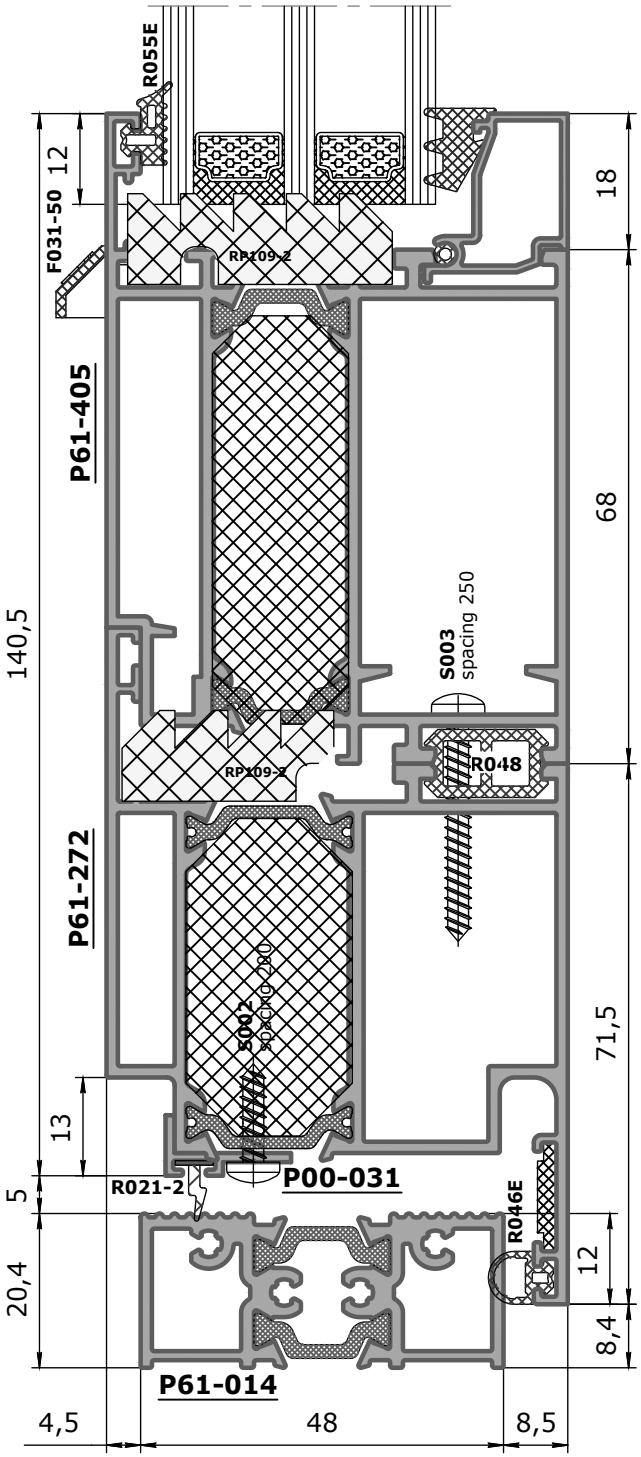

contents
profiles
delivery set
profiles (1:1)
sections
glazing tables
sub-assemblies tables
fitting arrangements
additional solutions
sub-assemblies
fire-resistant structures
connections
equipment and tools

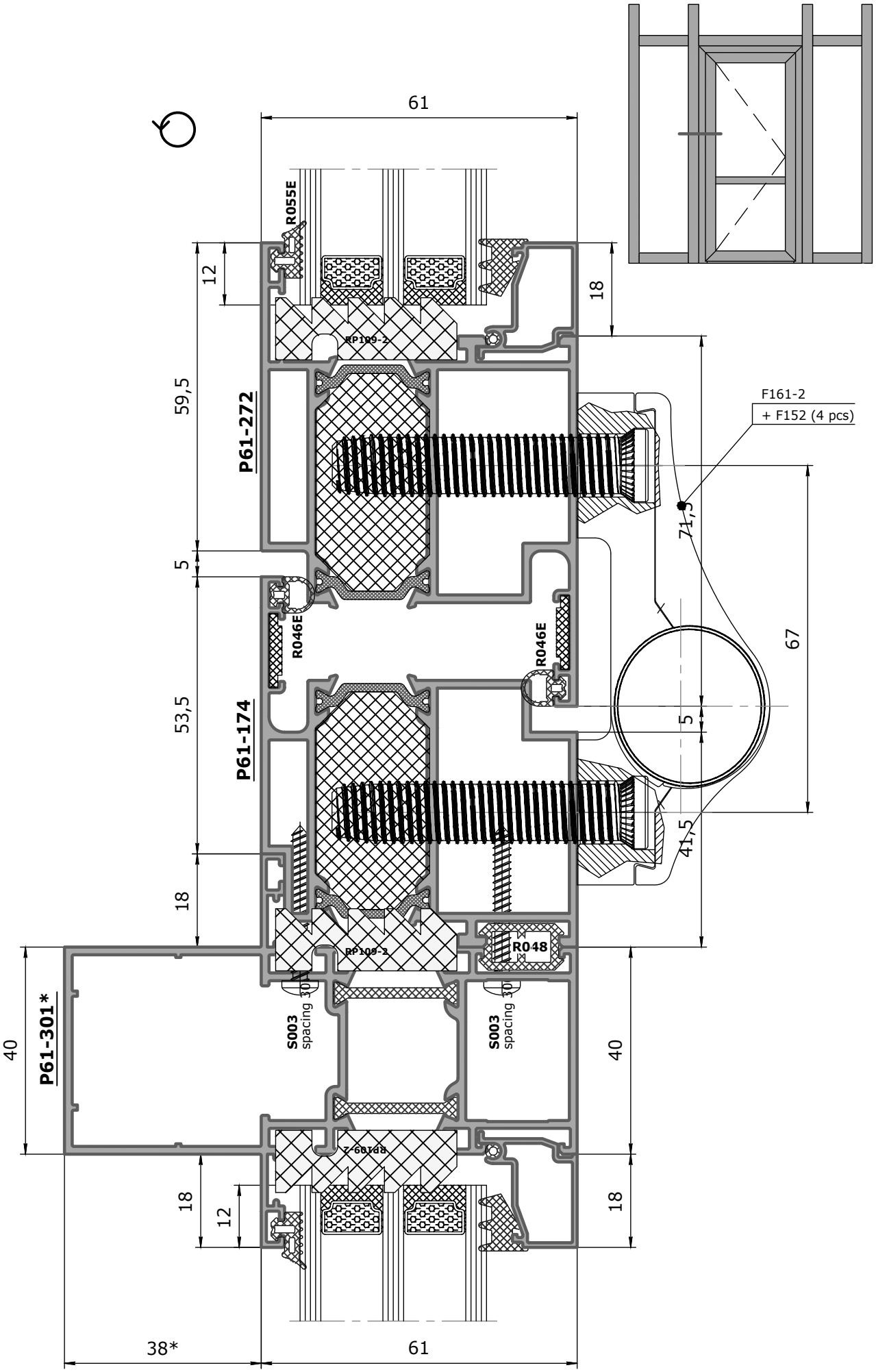

contents
profiles
delivery set
profiles (1:1)
sections
glazing tables
sub-assemblies tables
fitting arrangements
additional solutions
sub-assemblies
fire-resistant structures
connections
equipment and tools

contents
profiles
delivery set
profiles (1:1)
sections
glazing tables
sub-assemblies tables
fitting arrangements
additional solutions
sub-assemblies
fire-resistant structures
connections
equipment and tools

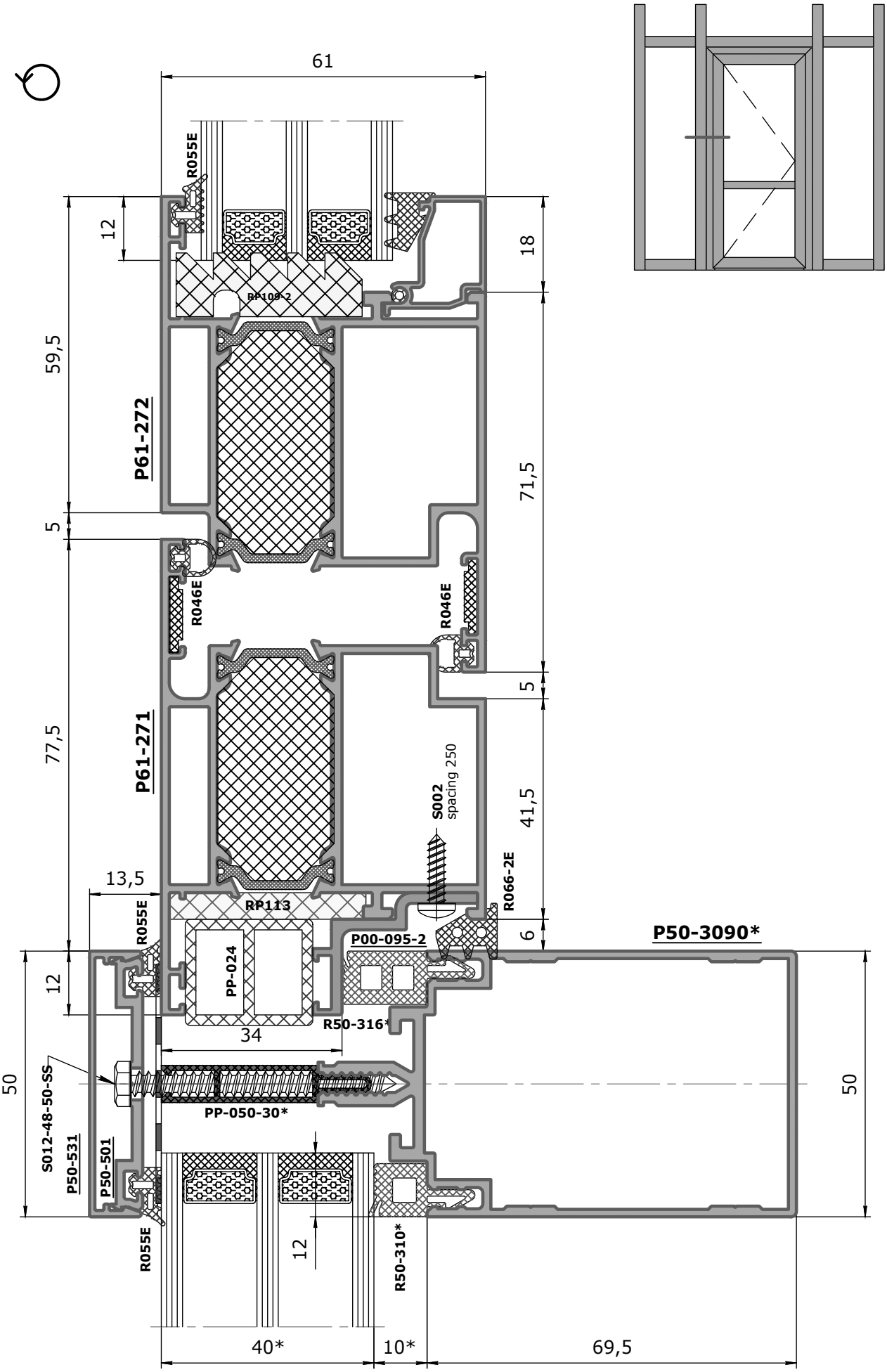

contents
profiles
delivery set
profiles (1:1)
sections
glazing tables
sub-assemblies tables
fitting arrangements
additional solutions
sub-assemblies
fire-resistant structures
connections
equipment and tools

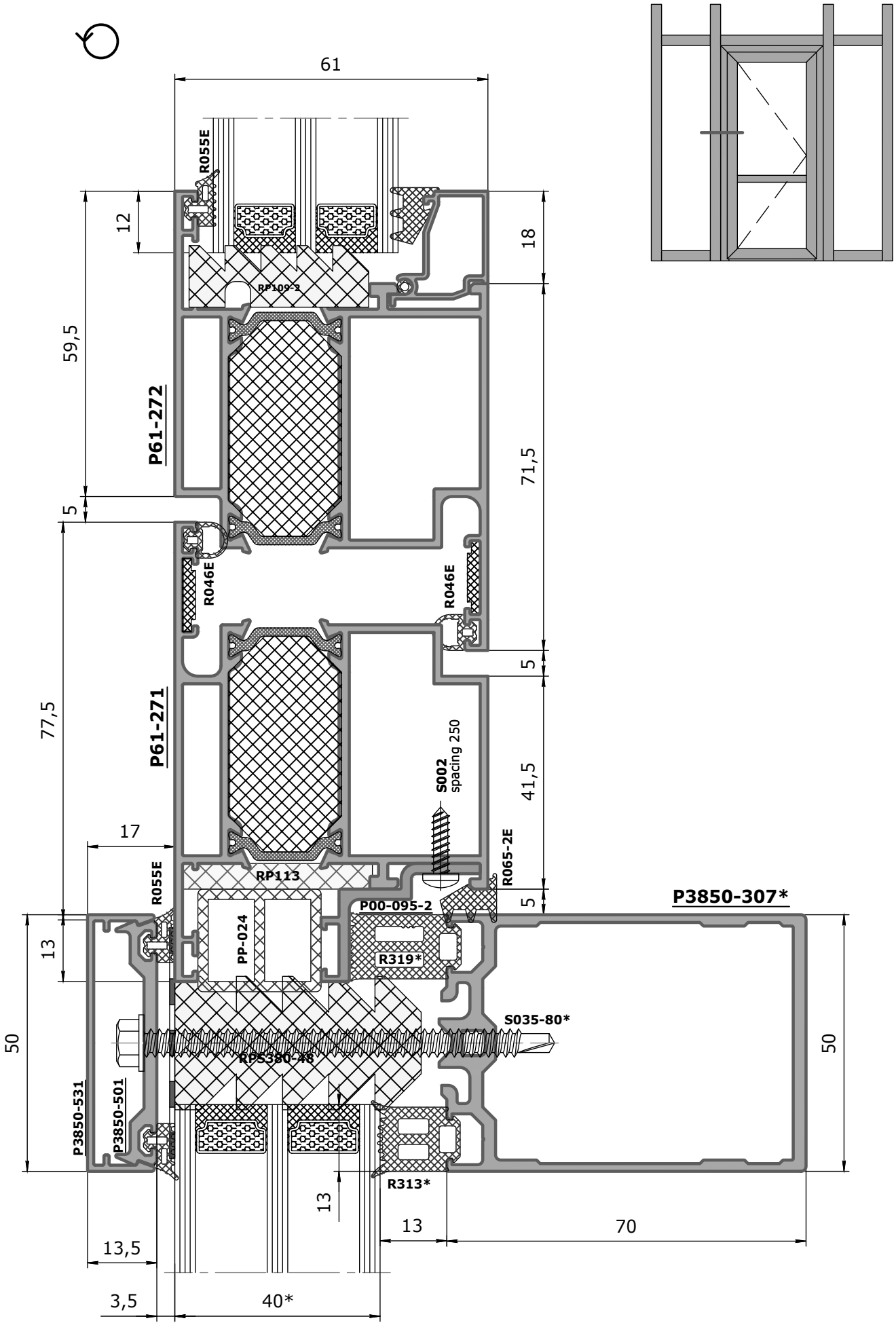

contents
profiles
delivery set
profiles (1:1)
sections
glazing tables
sub-assemblies tables
fitting arrangements
additional solutions
sub-assemblies
fire-resistant structures
connections
equipment and tools

Filling wedging diagram

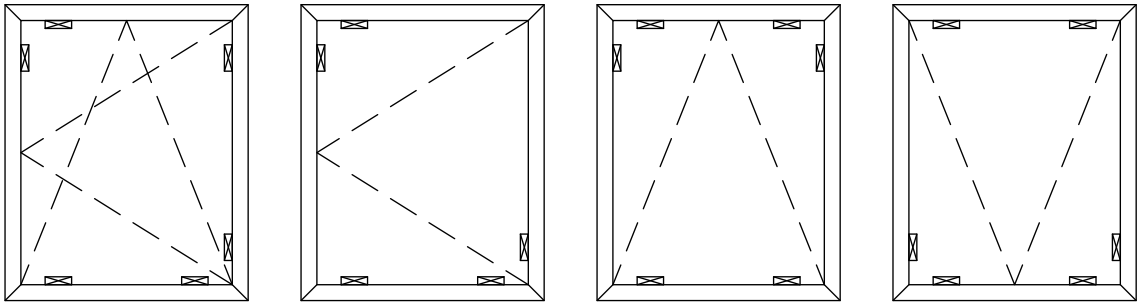

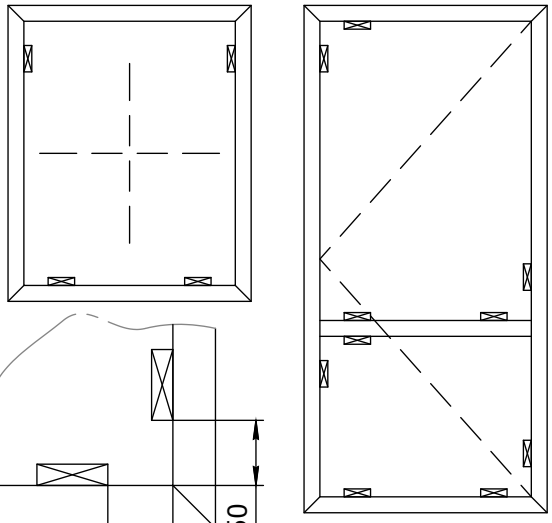

levelling pads

Before fixing with glazing beads, the filling of the opening and "blind" glazing elements must be "wedged" in place. Wedging is carried out using plastic levelling pads in accordance with the pattern specified for this type of opening.

If the filling is not properly wedged, the opening elements (sashes) of the structure may begin to sag.

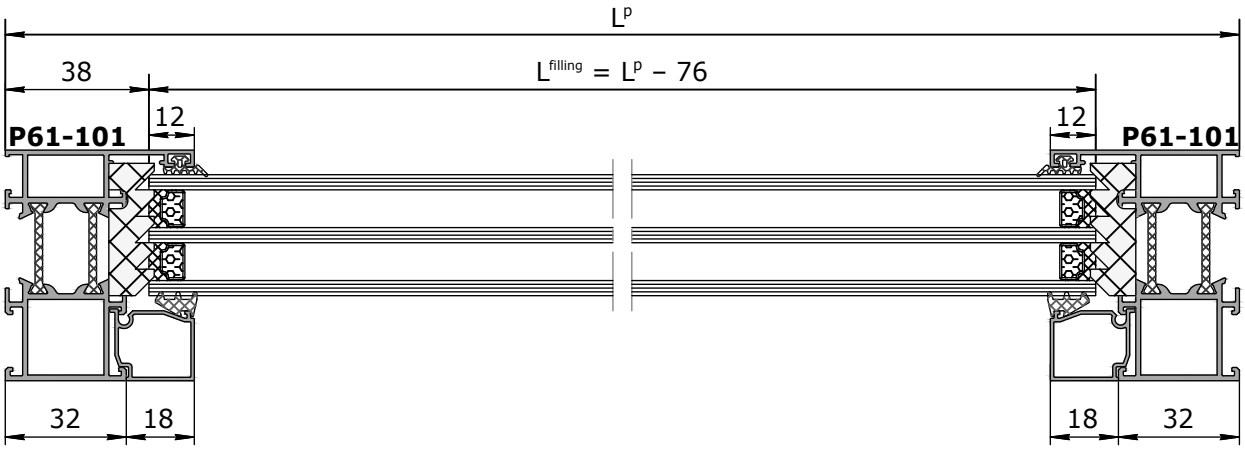

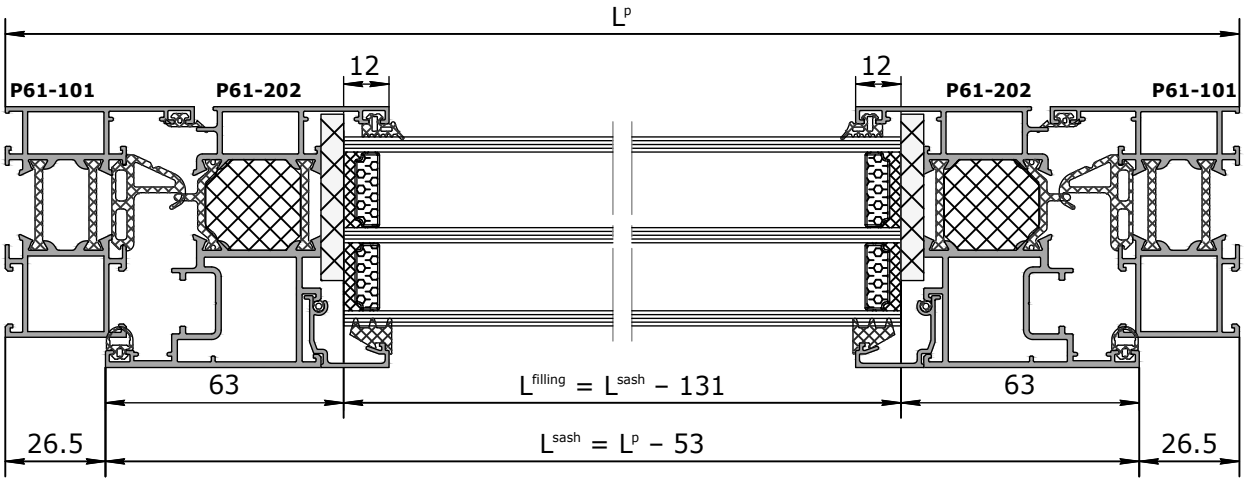

contents
profiles
delivery set
profiles (1:1)
sections
glazing tables
sub-assemblies tables
fitting arrangements
additional solutions
sub-assemblies
fire-resistant structures
connections
equipment and tools

Filling table: basic profiles

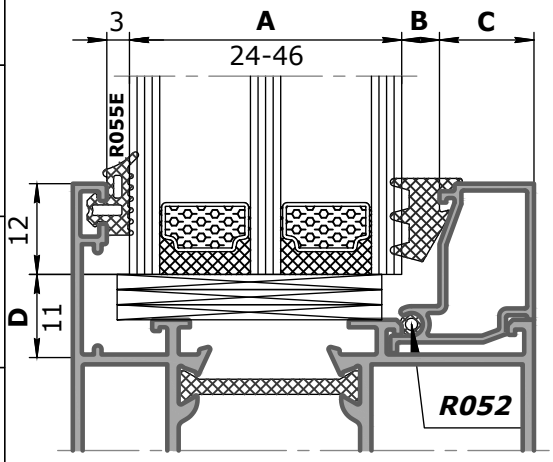

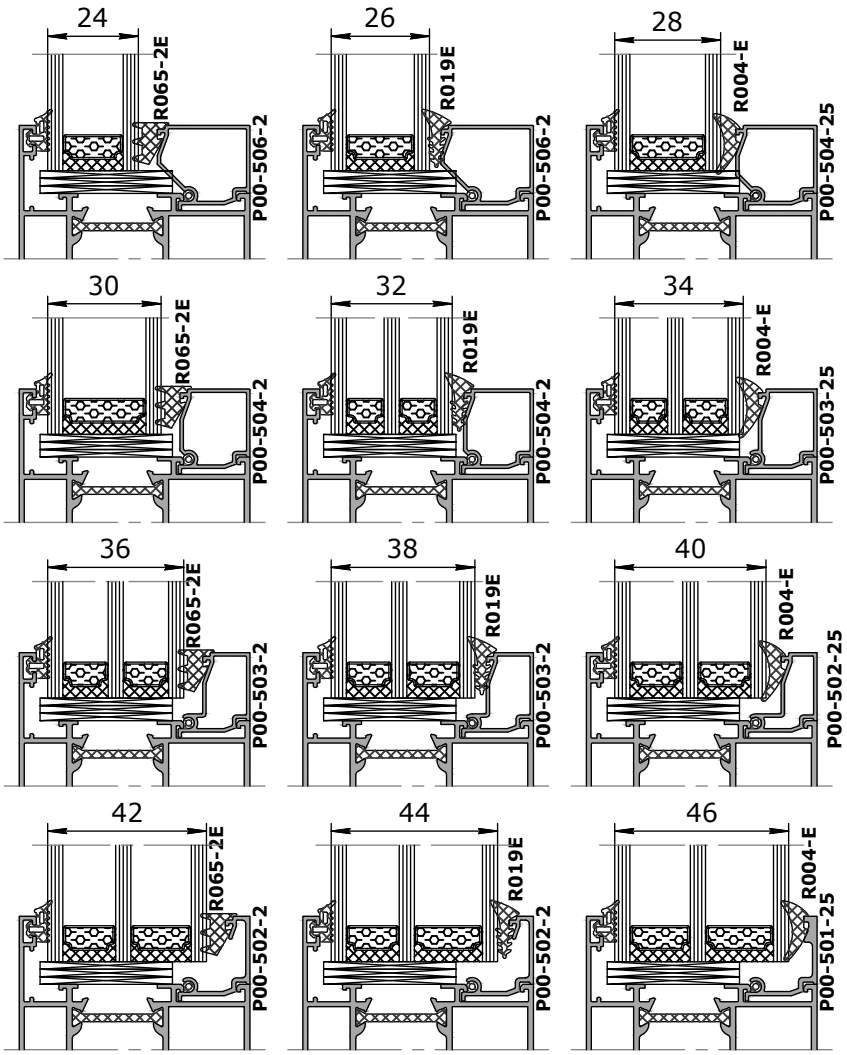

filling thickness **A**	internal gasket **B**	glazing bead **C**	support pad **D**
24	**R065-2E** (5 mm)	**P00-506-2** (24.5 mm)	**F039-2** (3 pcs)
26	**R019E** (3 mm)	**P00-506-2** (24.5 mm)	
28	**R004E** (4 mm)	**P00-504-25** (21.5 mm)	
30	**R065-2E** (5 mm)	**P00-504-2** (18.5 mm)	
32	**R019E** (3 mm)	**P00-504-2** (18.5 mm)	
34	**R004E** (4 mm)	**P00-503-25** (15.5 mm)	
36	**R065-2E** (5 mm)	**P00-503-2** (12.5 mm)	
38	**R019E** (3 mm)	**P00-503-2** (12.5 mm)	
40	**R004E** (4 mm)	**P00-502-25** (9.5 mm)	
42	**R065-2E** (5 mm)	**P00-502-2** (6.5 mm)	
44	**R019E** (3 mm)	**P00-502-2** (6.5 mm)	
46	**R004E** (4 mm)	**P00-501-25** (3.5 mm)	

This glazing table is valid for the following profiles:

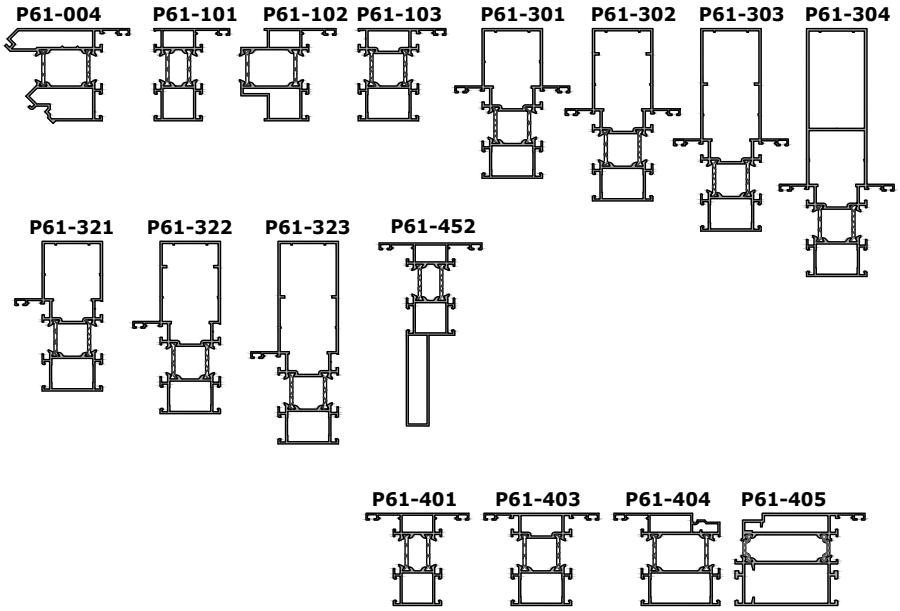

The selection of gaskets to be used for the installation of double-glazed units in aluminium structures specified in the technical documentation for Masttech systems is indicative and serves only to draw up the primary specification of the materials used. Since regulatory documentation on glued double-glazed units (GOSTs, SP, TU, etc.) allows for variations in thickness with a tolerance of ±1 mm, the gaskets shall be accurately selected experimentally for each batch of double-glazed units. Otherwise connection between the gaskets and the fillings may not be tight enough, which will lead to leaks and draughts. This will be the responsibility of the company that has installed the aluminium structures.

contents
profiles
delivery set
profiles (1:1)
sections
glazing tables
sub-assemblies tables
fitting arrangements
additional solutions
sub-assemblies
fire-resistant structures
connections
equipment and tools

Filling table: window sash profiles

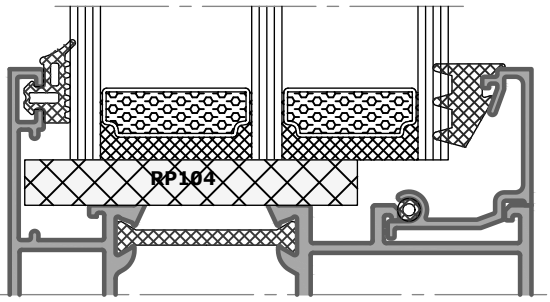

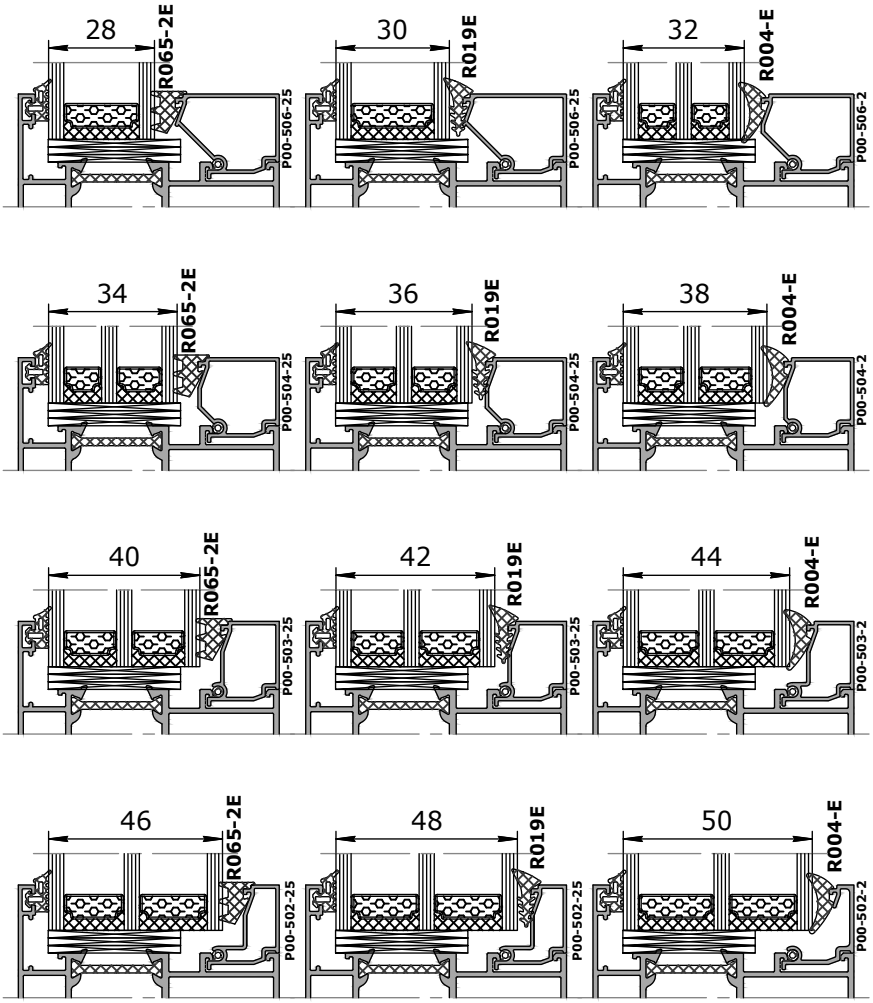

filling thickness **A**	internal gasket **B**	glazing bead **C**	support pad **D**
28	**R065-2E** (5 mm)	**P00-506-25** (27.5 mm)	**F039-2** (3 pcs)
30	**R019E** (3 mm)	**P00-506-25** (27.5 mm)	
32	**R004-E** (4 mm)	**P00-506-2** (24.5 mm)	
34	**R065-2E** (5 mm)	**P00-504-25** (21.5 mm)	
36	**R019E** (3 mm)	**P00-504-25** (21.5 mm)	
38	**R004-E** (4 mm)	**P00-504-2** (18.5 mm)	
40	**R065-2E** (5 mm)	**P00-503-25** (15.5 mm)	
42	**R019E** (3 mm)	**P00-503-25** (15.5 mm)	
44	**R004-E** (4 mm)	**P00-503-2** (12.5 mm)	
46	**R065-2E** (5 mm)	**P00-502-25** (9.5 mm)	
48	**R019E** (3 mm)	**P00-502-25** (9.5 mm)	
50	**R004-E** (4 mm)	P00-502-2 (6.5 mm)	

This glazing table is valid for the following profiles:

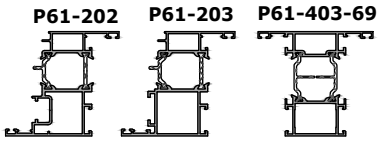

The selection of gaskets to be used for the installation of double-glazed units in aluminium structures specified in the technical documentation for Masttech systems is indicative and serves only to draw up the primary specification of the materials used. Since regulatory documentation on glued double-glazed units (GOSTs, SP, TU, etc.) allows for variations in thickness with a tolerance of ±1 mm, the gaskets shall be accurately selected experimentally for each batch of double-glazed units. Otherwise connection between the gaskets and the fillings may not be tight enough, which will lead to leaks and draughts. This will be the responsibility of the company that has installed the aluminium structures.

contents
profiles
delivery set
profiles (1:1)
sections
glazing tables
sub-assemblies tables
fitting arrangements
additional solutions
sub-assemblies
fire-resistant structures
connections
equipment and tools

Glazing table: doors

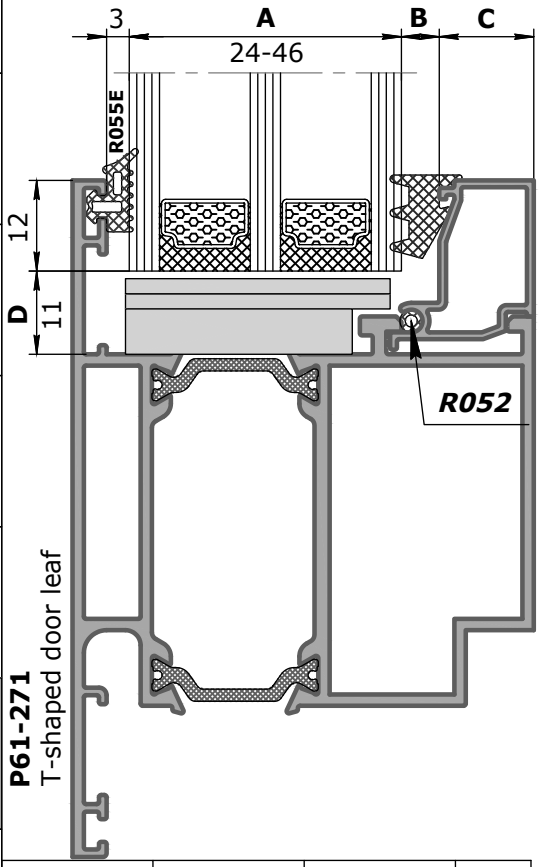

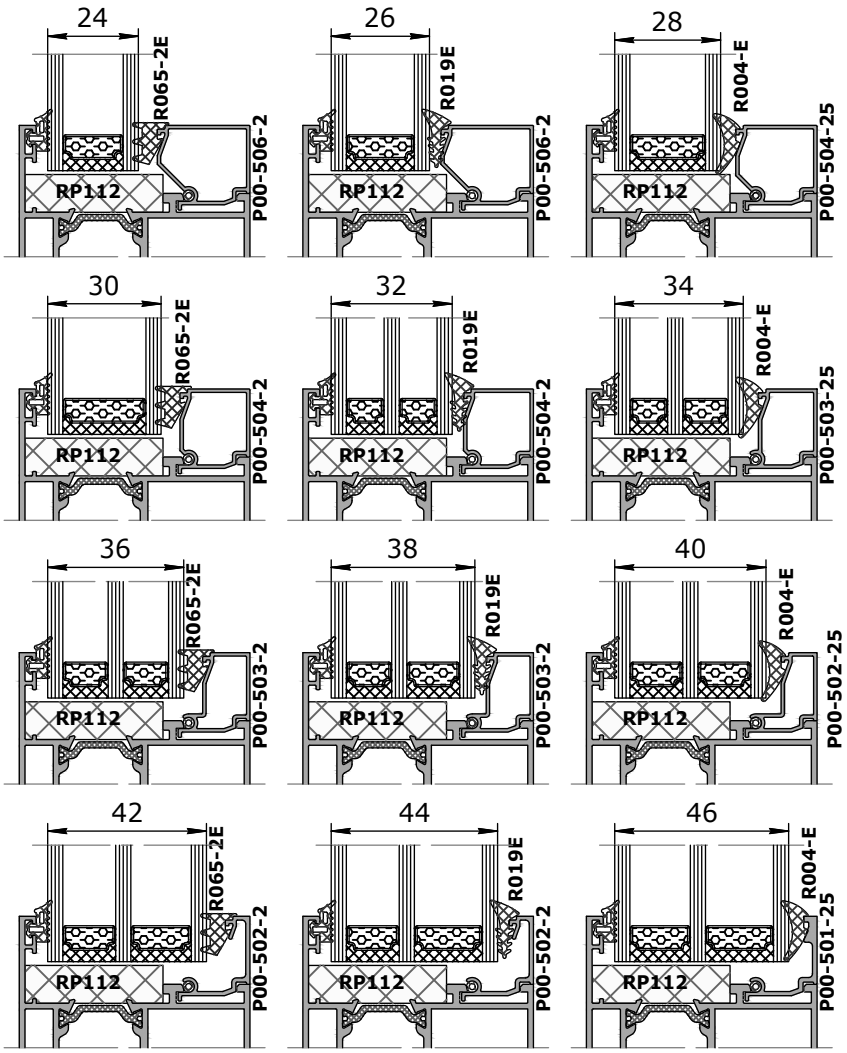

filling thickness **A**	internal gasket **B**	glazing bead **C**	support pad **D**
24	**R065-2E** (5 mm)	**P00-506-2** (24.5 mm)	**F039-609 + F039-2** (2 pcs)
26	**R019E** (3 mm)	**P00-506-2** (24.5 mm)	
28	**R004E** (4 mm)	**P00-504-25** (21.5 mm)	
30	**R065-2E** (5 mm)	**P00-504-2** (18.5 mm)	
32	**R019E** (3 mm)	**P00-504-2** (18.5 mm)	
34	**R004E** (4 mm)	**P00-503-25** (15.5 mm)	
36	**R065-2E** (5 mm)	**P00-503-2** (12.5 mm)	
38	**R019E** (3 mm)	**P00-503-2** (12.5 mm)	
40	**R004E** (4 mm)	**P00-502-25** (9.5 mm)	
42	**R065-2E** (5 mm)	**P00-502-2** (6.5 mm)	
44	**R019E** (3 mm)	**P00-502-2** (6.5 mm)	
46	**R004E** (4 mm)	**P00-501-25** (3.5 mm)	

This glazing table is valid for the following profiles:

The selection of gaskets to be used for the installation of double-glazed units in aluminium structures specified in the technical documentation for Masttech systems is indicative and serves only to draw up the primary specification of the materials used. Since regulatory documentation on glued double-glazed units (GOSTs, SP, TU, etc.) allows for variations in thickness with a tolerance of ±1 mm, the gaskets shall be accurately selected experimentally for each batch of double-glazed units. Otherwise connection between the gaskets and the fillings may not be tight enough, which will lead to leaks and draughts. This will be the responsibility of the company that has installed the aluminium structures.

contents
profiles
delivery set
profiles (1:1)
sections
glazing tables
sub-assemblies tables
fitting arrangements
additional solutions
sub-assemblies
fire-resistant structures
connections
equipment and tools

Glazing table: doors — structural glazing

filling thickness A	internal gasket B	glazing bead C	support pad D
34	**R065-2E** (5 mm)	**P00-507-2** (30.5 mm)	**F039-609** + **F039-2** (2 pcs)
36	**R019E** (3 mm)	**P00-507-2** (30.5 mm)	
38	**R004E** (4 mm)	**P00-506-25** (27.5 mm)	
40	**R065-2E** (5 mm)	**P00-506-2** (24.5 mm)	
42	**R019E** (3 mm)	**P00-506-2** (24.5 mm)	
44	**R004E** (4 mm)	**P00-504-25** (21.5 mm)	
46	**R065-2E** (5 mm)	**P00-504-2** (18.5 mm)	
48	**R019E** (3 mm)	**P00-504-2** (18.5 mm)	
50	**R004E** (4 mm)	**P00-503-25** (15.5 mm)	
52	**R065-2E** (5 mm)	**P00-503-2** (12.5 mm)	
54	**R019E** (3 mm)	**P00-503-2** (12.5 mm)	
56	**R004E** (4 mm)	**P00-502-25** (9.5 mm)	
58	**R065-2E** (5 mm)	**P00-502-2** (6.5 mm)	
60	**R019E** (3 mm)	**P00-502-2** (6.5 mm)	
62	**R004E** (4 mm)	**P00-501-25** (3.5 mm)	

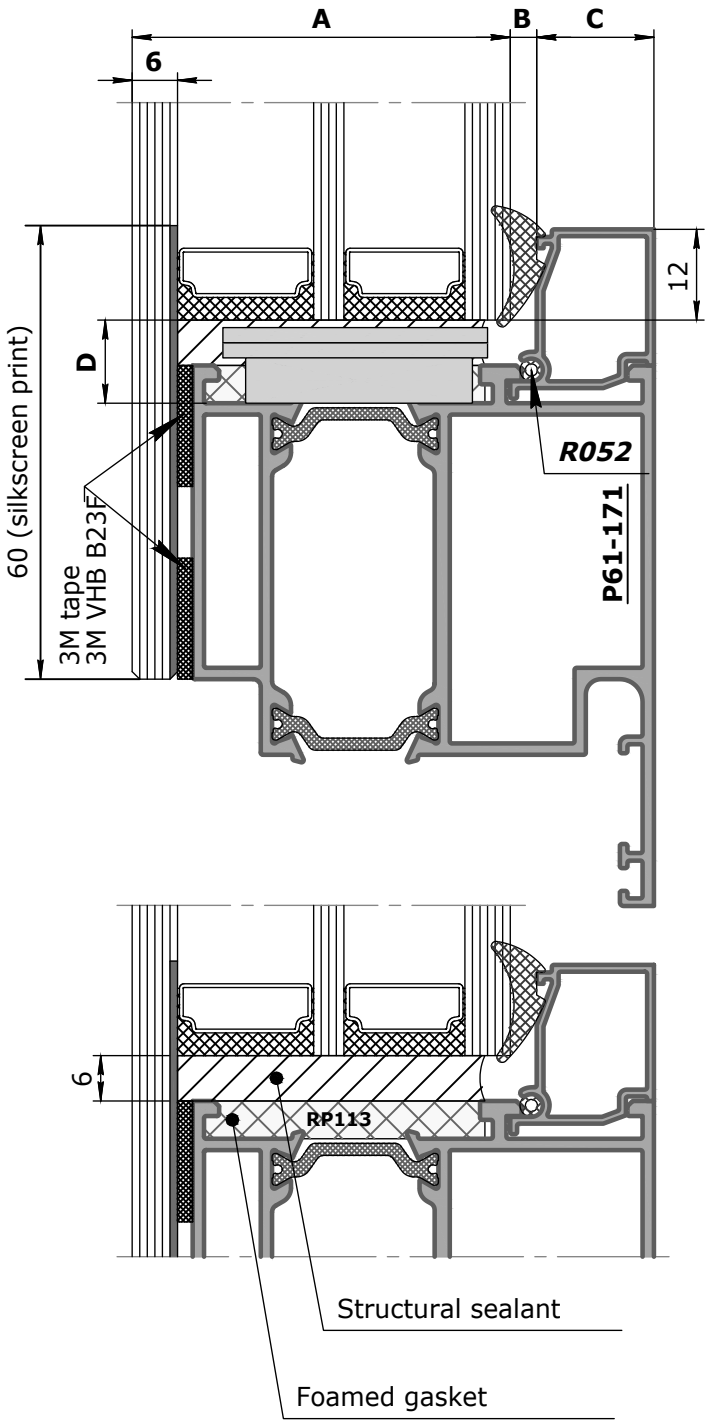

In order to avoid visible profile areas as well as manufacturing gaps, a double-glazed unit (DGU) with a single-colour silkscreen print along the perimeter of the external pane is used; the painted area must overlap the width of the profile and the manufacturing joints. 3M mounting tape to be used: 3M VHB B23F (black) — double-sided mounting tape 18 mm, acrylic foam base, acrylic adhesive, 2.3 mm thick. Prior to bonding the double-glazed unit, determine the adhesive strength of the bonded materials.

The selection of gaskets to be used for the installation of double-glazed units in aluminium structures specified in the technical documentation for Masttech systems is indicative and serves only to draw up the primary specification of the materials used. Since regulatory documentation on glued double-glazed units (GOSTs, SP, TU, etc.) allows for variations in thickness with a tolerance of ±1 mm, the gaskets shall be accurately selected experimentally for each batch of double-glazed units. Otherwise connection between the gaskets and the fillings may not be tight enough, which will lead to leaks and draughts. This will be the responsibility of the company that has installed the aluminium structures.

contents
profiles
delivery set
profiles (1:1)
sections
glazing tables
sub-assemblies tables
fitting arrangements
additional solutions
sub-assemblies
fire-resistant structures
connections
equipment and tools

Glass bonding instructions

Materials and tools used

1. VHB tape: 3M VHB G23F (grey) or 3M VHB B23F (black), 18 mm wide. Double-sided mounting tape, acrylic foam base, acrylic adhesive, 2.3 mm thick.
2. Primer: Primer 94EF — always apply a thin layer of Primer 94EF on powder coatings after abrasive treatment.
3. Silane glass primer: multiplies the adhesive strength of the tape. To be used under low temperatures or when bonding live panels.
4. Abrasive: Scotch-Brite 07447. The use of other abrasives is not recommended as they may leave too deep risk on the surface reducing the bond strength.
5. Lint-free wipes.
6. Plastic tape applicator. Ensures that the tape is applied to the glass with a minimum of bubbles.
7. Sharp knife. Cut two layers of tape at the corners of the frame to create a tight joint. Use a sharp knife — a blunt blade will damage the tape and will not allow to get a tight joint.
8. Two-handed pressure roller. Used to press the tape to the profile immediately after applying and to further press the glass to the profile with the tape applied. Apply firm pressure with both hands — good pressure is essential to ensure that the tape contacts both surfaces and forms a strong and durable joint.
9. Silicone. Sealing the perimeter of the sash with silicone sealant is recommended — although VHB™ tape is highly resistant to environmental conditions, the joint should be sealed as water could freeze there and compress the glass.

Frame preparation

1. Make sure that all necessary tools and materials are available.
2. Make sure that the room temperature is at least +15 °C.
3. Treat the powder-coated area of the frame to be bonded with Scotch-Brite 7447 abrasive. Do not remove all of the powder coating. Remove only the top layer, leaving a matt finish.
4. Clean the treated surface with an isopropanol/water mixture (1:1 by volume).
5. Apply 94EF primer with a slightly dampened wipe. Apply only one coat in the minimum amount.
6. Apply the tape 5 minutes after the surface has been treated with an adhesion promoter.

Glass surface preparation

1. Treat the glass with glass silane primer by applying only one coat in a minimum amount. Allow to dry for at least 5 minutes before applying the tape. Immediately remove any excess primer with a dry, clean wipe before it dries.
2. If the glass is very dirty, clean it with acetone, heptane or a mixture of isopropanol and water (1:1) before applying the silane primer.
3. There should be no cloudy stains on the glass after treatment with silane primer, otherwise clean the glass and reapply the primer.

Tape application

1. Apply the tape to the prepared frame using a manual applicator. Tape application without an applicator is not recommended as it is difficult to ensure a quality application without air bubbles.
2. To apply the tape evenly, make sure it fits into the groove of the applicator; move the applicator along the edge of the frame, pressing the tab at the bottom of the applicator against the edge of the glass.
3. Overlap the tape in the corners of the glass so that the second layer of tape is on top of the first one.
4. Roll the tape with a stiff roller without removing the protective film. Press the roller firmly during operation. Only this roller should be used.
5. Roll the tape all the way to the end of the frame and, preferably, at the ends on both sides. Adhesion of the tape to the frame can be checked by tearing the tape's protective film at the frame edge. When doing so, the tape must remain in place; if the tape tears off, flat it with a roller again. If the tape continues to come off the surface, the cleaning procedure may have been carried out incorrectly. In this case it may be necessary to remove the tape and re-prepare the surface.

Frame angle piece — 90 degree bevel

1. Attach the tape to the frame so that the second layer of tape overlaps the first layer in each corner.
2. Use a roller to press the tape onto the frame — if the tape is not pressed down, it may come off during subsequent operations. Do not immediately press the tape down as hard as possible as it may shift. If the tape is displaced, remove it and reapply.
3. Cut through the top protective layer of tape in each corner close to the inner edge of the bottom layer and remove the cut-off. If the edge of the bottom layer is bent upwards and may prevent the glass from fitting tightly, the excess tape should also be cut off and removed.
4. Gently smooth out and press the undercut section of the tape with your thumb — the edges of the tape will fuse together when pressed, providing an extra seal.
5. Roll the seam you have made with the edge of the roller to ensure a strong adhesive bond. Make sure both edges of the tape are in contact.
6. Only then remove the protective film from the tape.

Joining

1. Use the guides to ensure that the glass is positioned correctly on the frame at the first try. Once joined, the glass cannot be repositioned.
2. Move the glass with special devices (suction cups).
3. To fit the glass, lift it up, remove the protective film and lower the glass onto the frame.
4. After joining, apply additional pressure to the tape using a VULKAN or other manual pressing device.
5. Finally, to verify the pressing quality, check how the colour of the tape has changed. Good adhesion: if you look at the tape through the glass, you will see a uniform grey tint. Satisfactory adhesion: if you look at the tape through the glass, you will see a light grey tint in some places — additional pressing is required.

Sealing

It is recommended to apply a neutral silicone sealant around the perimeter of the glass to protect the joint from external influences and water ingress into the gap between the frame and the glass.

contents
profiles
delivery set
profiles (1:1)
sections
glazing tables
sub-assemblies tables
fitting arrangements
additional solutions
sub-assemblies
fire-resistant structures
connections
equipment and tools

contents
profiles
delivery set
profiles (1:1)
sections
glazing tables
sub-assemblies tables
fitting arrangements
additional solutions
sub-assemblies
fire-resistant structures
connections
equipment and tools

Selection of embedded parts

profile	view		
P61-101	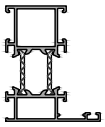	C120-11 C120-20 C602	C120-11 C120-20 C602 S407 (4 pcs)
P61-103	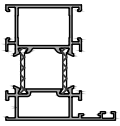	C118-10 C118-20 C605-3	C118-10 C118-20 C605-3 S407 (4 pcs)
P61-201	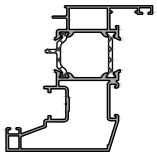	C120-11 C120-36 C121-06 C602	C120-11 C120-36 C121-06 C602 S407 (4 pcs)
P61-202	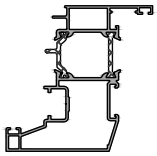	C120-11 C120-27 C602 C605-3	C120-11 C120-27 C602 C605-3 S407 (4 pcs)
P61-203	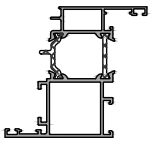	C120-11 C118-27 C602 C605-3	C120-11 C118-27 C602 C605-3 S407 (4 pcs)

profile	view		
P61-171	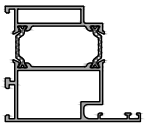	C127-07 C127-25 C602	C127-07 C127-25 C602 S407 (4 pcs)
P61-172	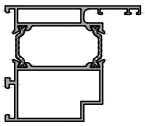	C127-07 C127-25 C602	C127-07 C127-25 C602 S407 (4 pcs)
P61-173	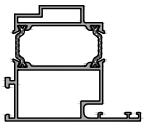	C120-07 C127-25 C602	C120-07 C127-25 C602 S407 (2 pcs)
P61-174	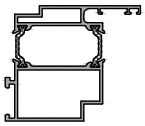	C120-07 C127-25 C602	C120-07 C127-25 C602 S407 (2 pcs)
P61-271	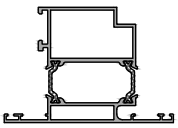	C127-07 C127-25 C602 (2 pcs)	C127-07 C127-25 C602 (2 pcs) S407 (4 pcs)
P61-272	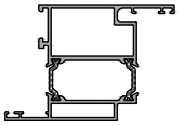	C127-07 C127-25 C602 (2 pcs)	C127-07 C127-25 C602 (2 pcs) S407 (4 pcs)

contents
profiles
delivery set
profiles (1:1)
sections
glazing tables
sub-assemblies tables
fitting arrangements
additional solutions
sub-assemblies
fire-resistant structures
connections
equipment and tools

contents
profiles
delivery set
profiles (1:1)
sections
glazing tables
sub-assemblies tables
fitting arrangements
additional solutions
sub-assemblies
fire-resistant structures
connections
equipment and tools

profile	view	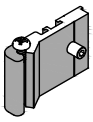	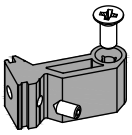
P61-101	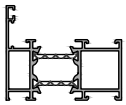	C521-20	C522-20
P61-103	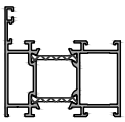	C528-26	C522-26
P61-212-190		C528-26 (2 pcs)	C522-26 (2 pcs)
P61-401	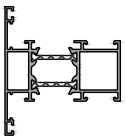	C528-20	C522-20
P61-403	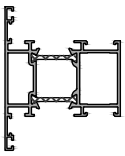	C528-26	C522-26
P61-404	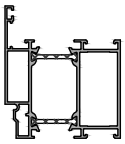	C528-20	C522-20
P61-405	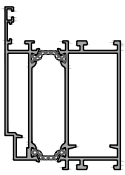	C528-26	C522-26

contents
profiles
delivery set
profiles (1:1)
sections
glazing tables
sub-assemblies tables
fitting arrangements
additional solutions
sub-assemblies
fire-resistant structures
connections
equipment and tools

contents
profiles
delivery set
profiles (1:1)
sections
glazing tables
sub-assemblies tables
fitting arrangements
additional solutions
sub-assemblies
fire-resistant structures
connections
equipment and tools

Fitting arrangement. Tilt & turn window

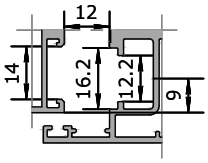

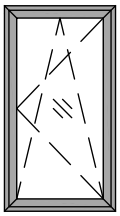

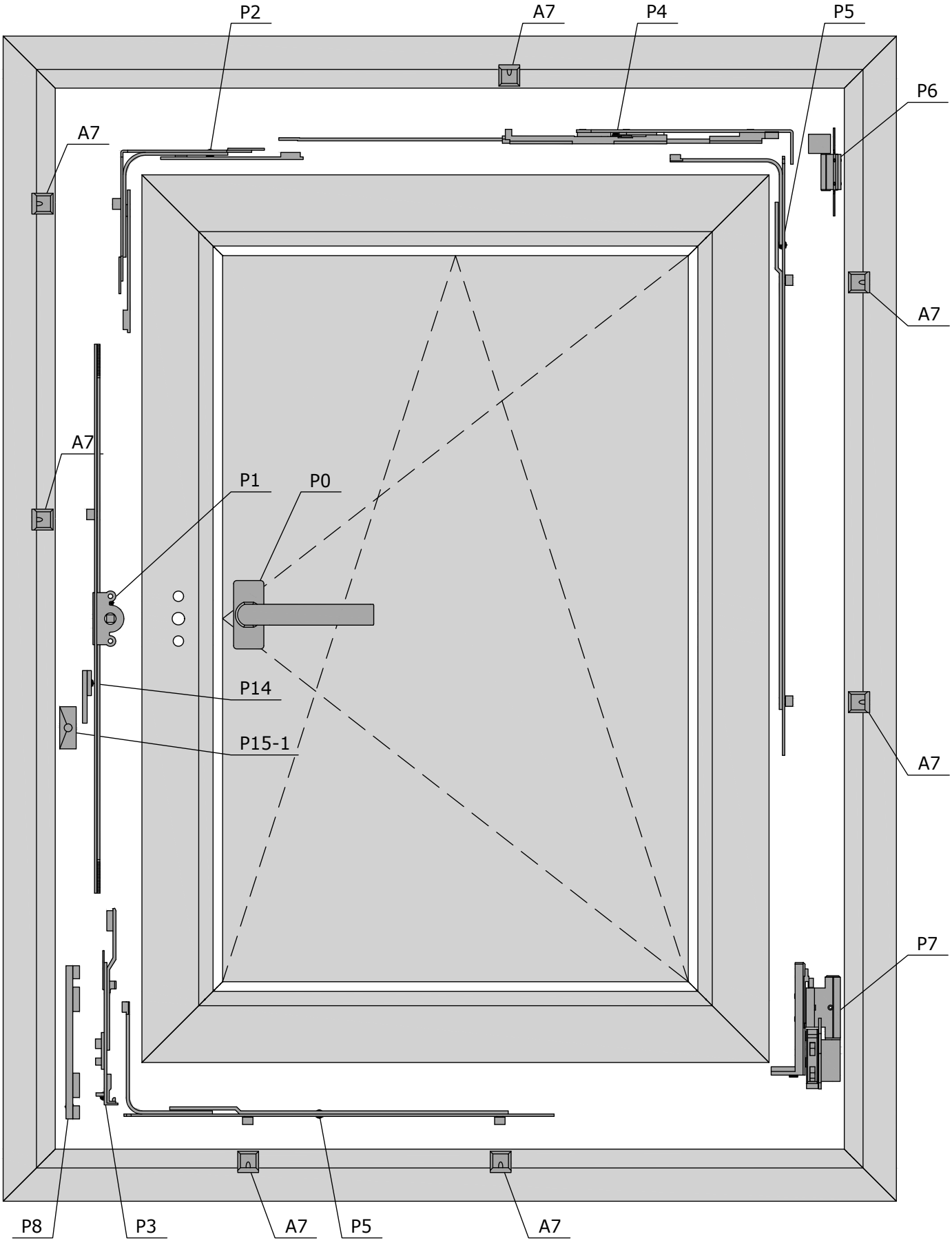

contents
profiles
delivery set
profiles (1:1)
sections
glazing tables
sub-assemblies tables
fitting arrangements
additional solutions
sub-assemblies
fire-resistant structures
connections
equipment and tools

contents
profiles
delivery set
profiles (1:1)
sections
glazing tables
sub-assemblies tables
fitting arrangements
additional solutions
sub-assemblies
fire-resistant structures
connections
equipment and tools

Fitting arrangement. Turn window

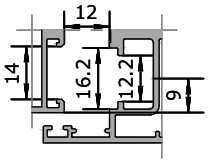

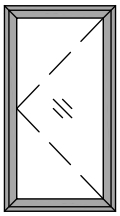

P10-1 A7 P5 A7 P9

P6

A7

P11

P1 P0

A7

P11

P14

P15-1

P7

A7

P10-2 A7 P5 A7

contents
profiles
delivery set
profiles (1:1)
sections
glazing tables
sub-assemblies tables
fitting arrangements
additional solutions
sub-assemblies
fire-resistant structures
connections
equipment and tools

contents
profiles
delivery set
profiles (1:1)
sections
glazing tables
sub-assemblies tables
fitting arrangements
additional solutions
sub-assemblies
fire-resistant structures
connections
equipment and tools

Turn window (L < 900) locking with catches

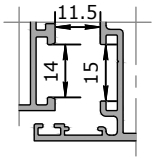

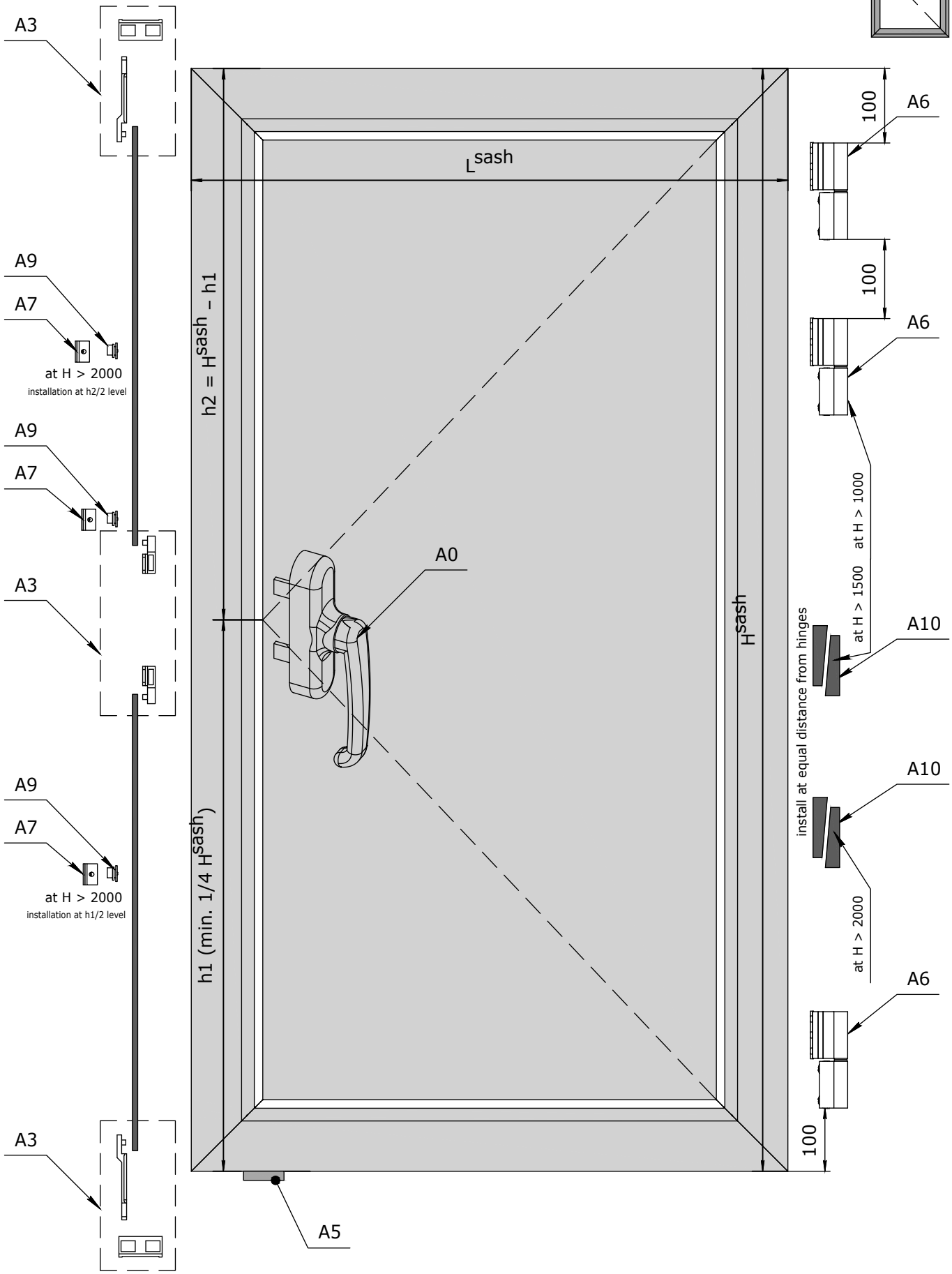

contents
profiles
delivery set
profiles (1:1)
sections
glazing tables
sub-assemblies tables
fitting arrangements
additional solutions
sub-assemblies
fire-resistant structures
connections
equipment and tools

Turn window (L < 900) locking with pins

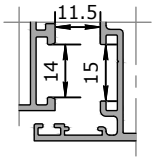

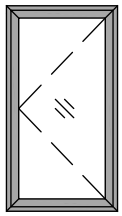

A9
A7
A9
A7
at H > 2000
installation at h2/2 level
A9
A7
A1
A9
A7
at H > 2000
installation at h1/2 level
A9
A7

L^{sash}

$h2 = H^{sash} - h1$

$h1$ (min. $1/4\ H^{sash}$)

H^{sash}

A0

A5

100
A6
100
A6
at H > 1000
at H > 1500
A10
install at equal distance from hinges
A10
at H > 2000
A6
100

contents
profiles
delivery set
profiles (1:1)
sections
glazing tables
sub-assemblies tables
fitting arrangements
additional solutions
sub-assemblies
fire-resistant structures
connections
equipment and tools

Turn window (L ≥ 900) locking with pins

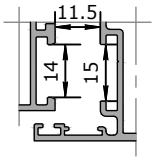

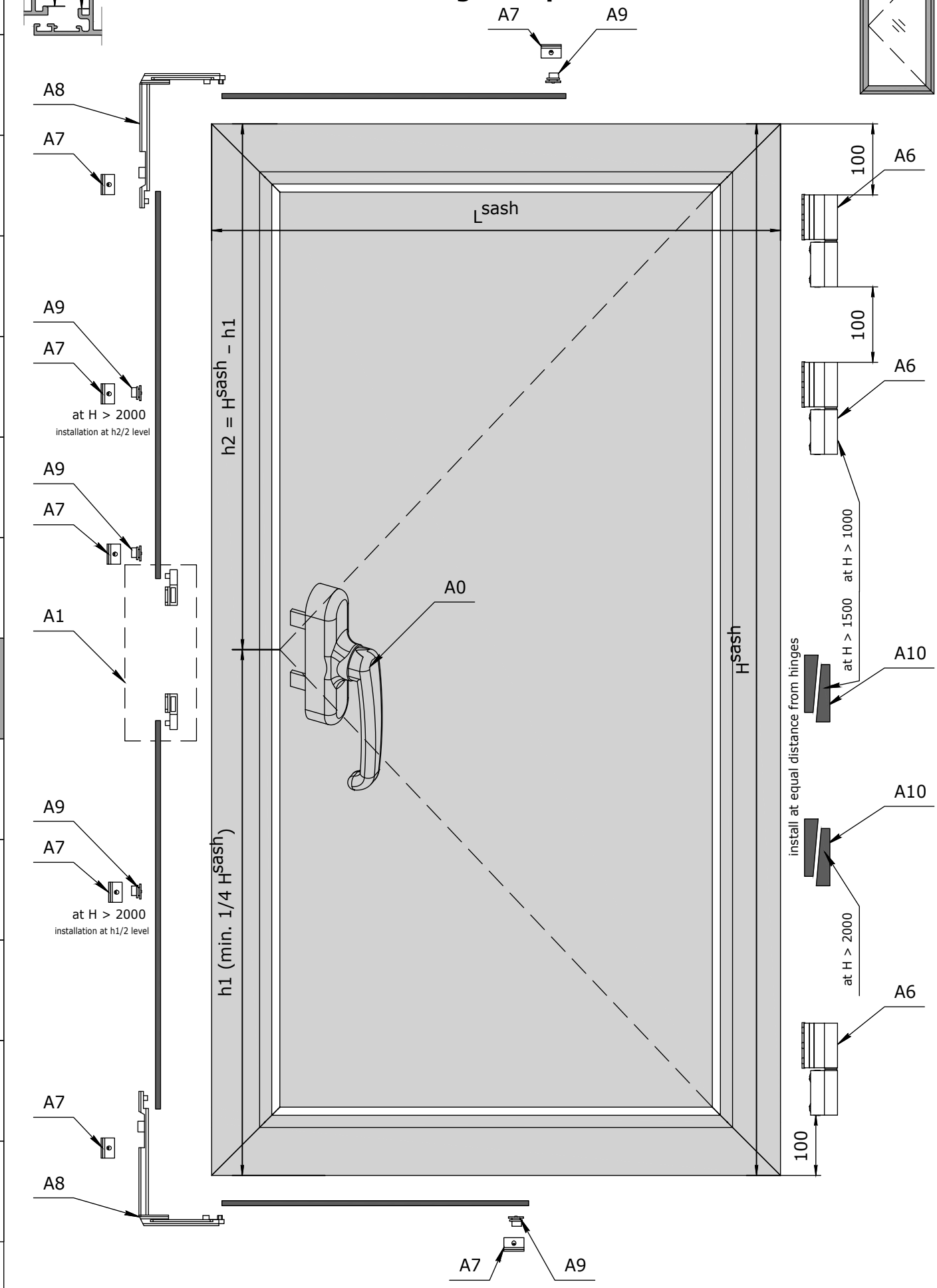

contents
profiles
delivery set
profiles (1:1)
sections
glazing tables
sub-assemblies tables
fitting arrangements
additional solutions
sub-assemblies
fire-resistant structures
connections
equipment and tools

Tilt & turn window

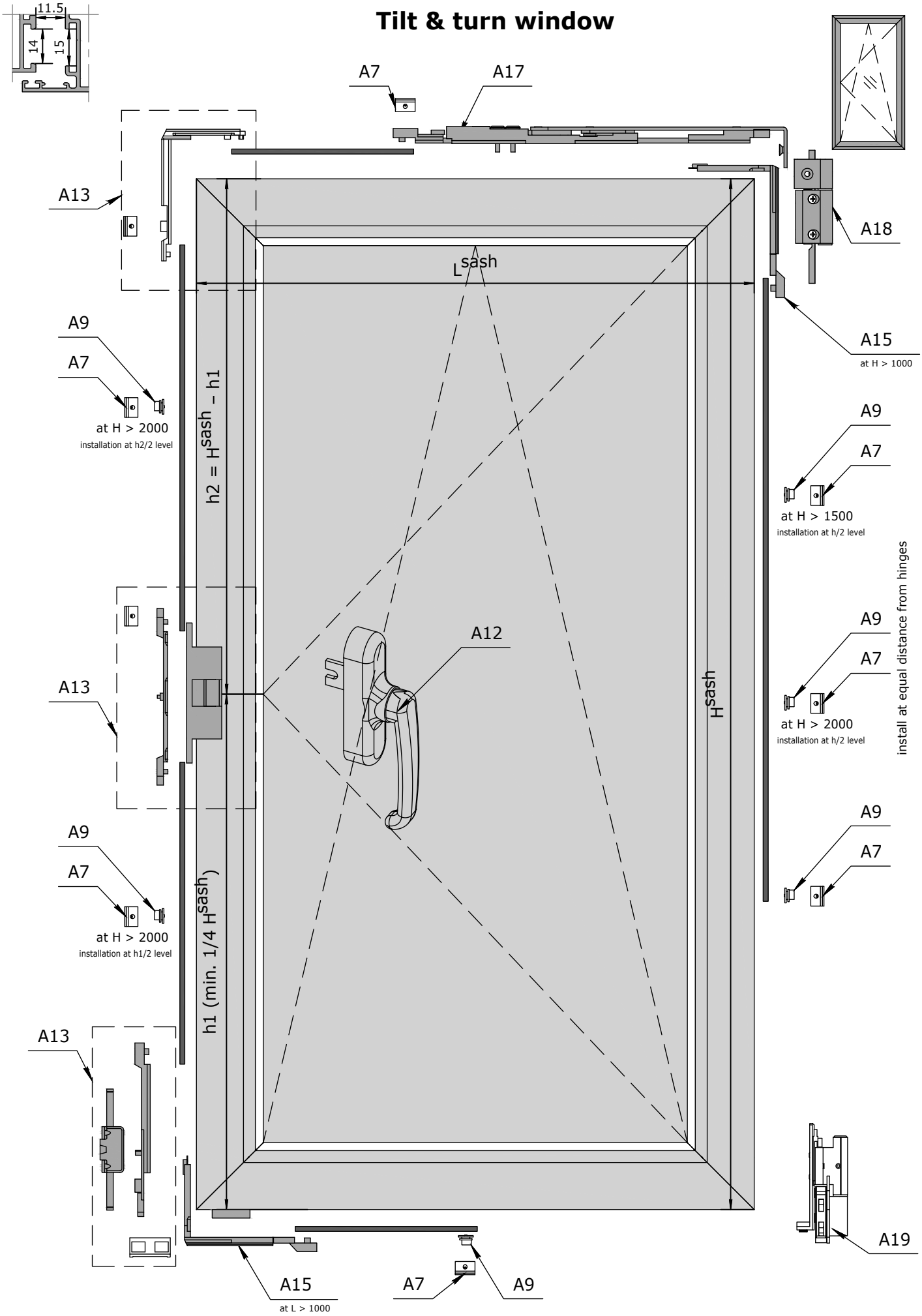

contents
profiles
delivery set
profiles (1:1)
sections
glazing tables
sub-assemblies tables
fitting arrangements
additional solutions
sub-assemblies
fire-resistant structures
connections
equipment and tools

Pivoted window (H < 900), top handle locking with catches

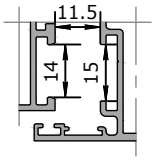

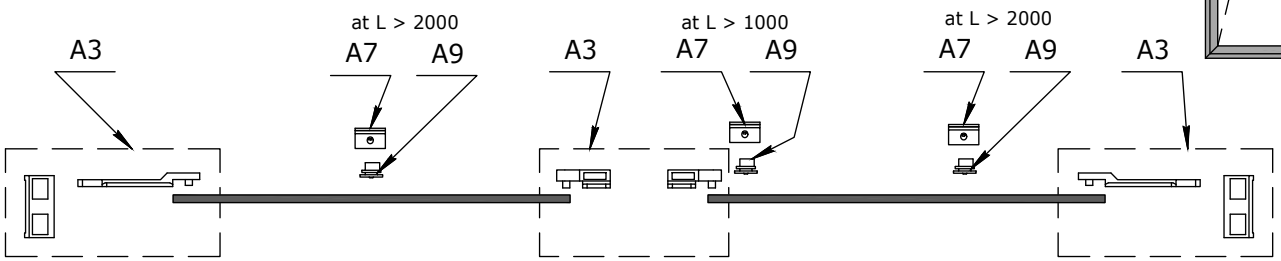

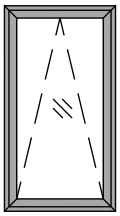

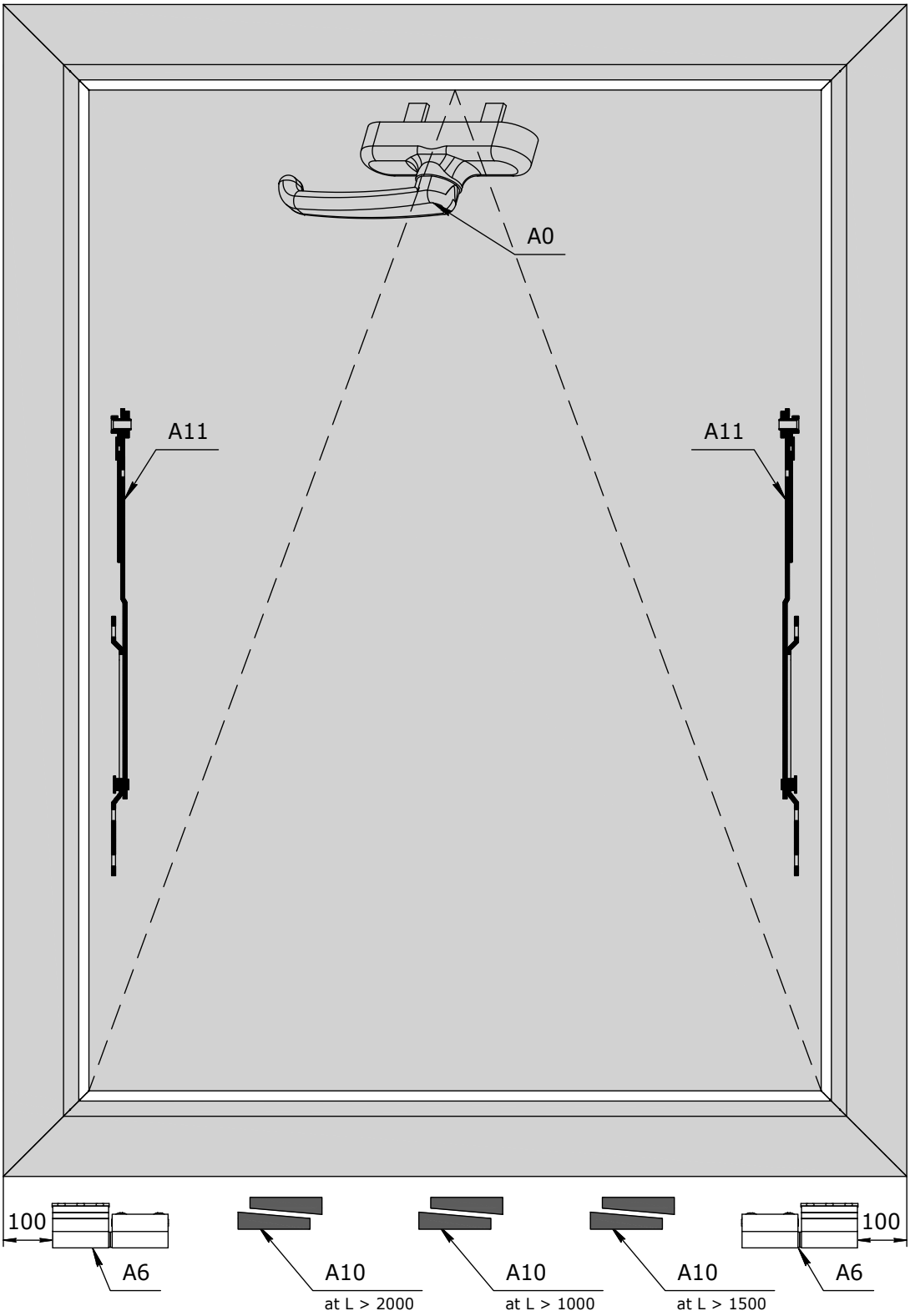

contents
profiles
delivery set
profiles (1:1)
sections
glazing tables
sub-assemblies tables
fitting arrangements
additional solutions
sub-assemblies
fire-resistant structures
connections
equipment and tools

contents
profiles
delivery set
profiles (1:1)
sections
glazing tables
sub-assemblies tables
fitting arrangements
additional solutions
sub-assemblies
fire-resistant structures
connections
equipment and tools

Pivoted window (H ≥ 900), top handle locking with pins

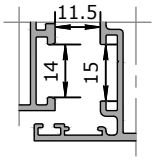

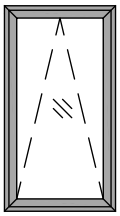

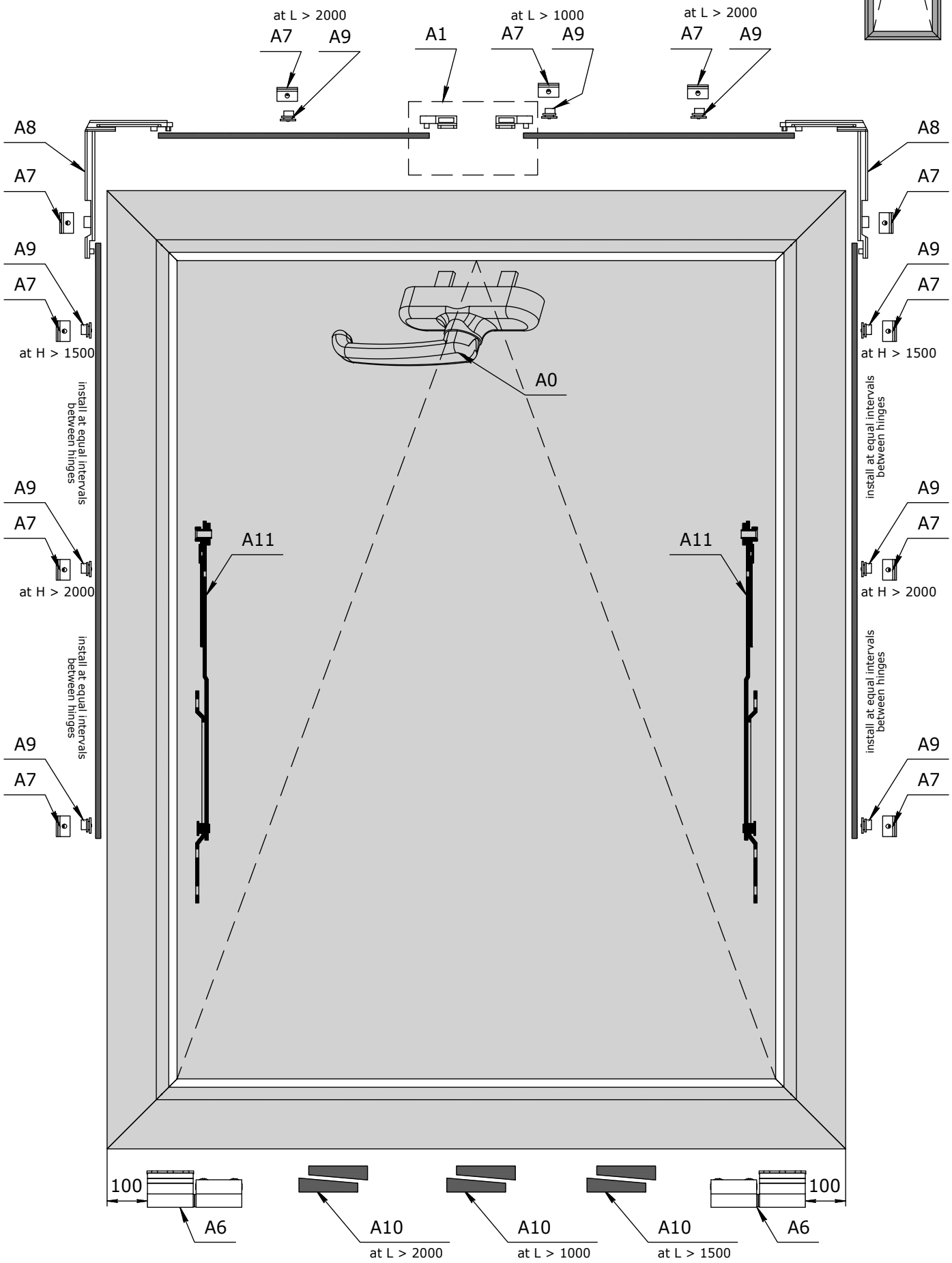

contents
profiles
delivery set
profiles (1:1)
sections
glazing tables
sub-assemblies tables
fitting arrangements
additional solutions
sub-assemblies
fire-resistant structures
connections
equipment and tools

Pivoted window (H ≥ 900), lateral handle

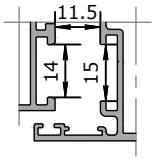

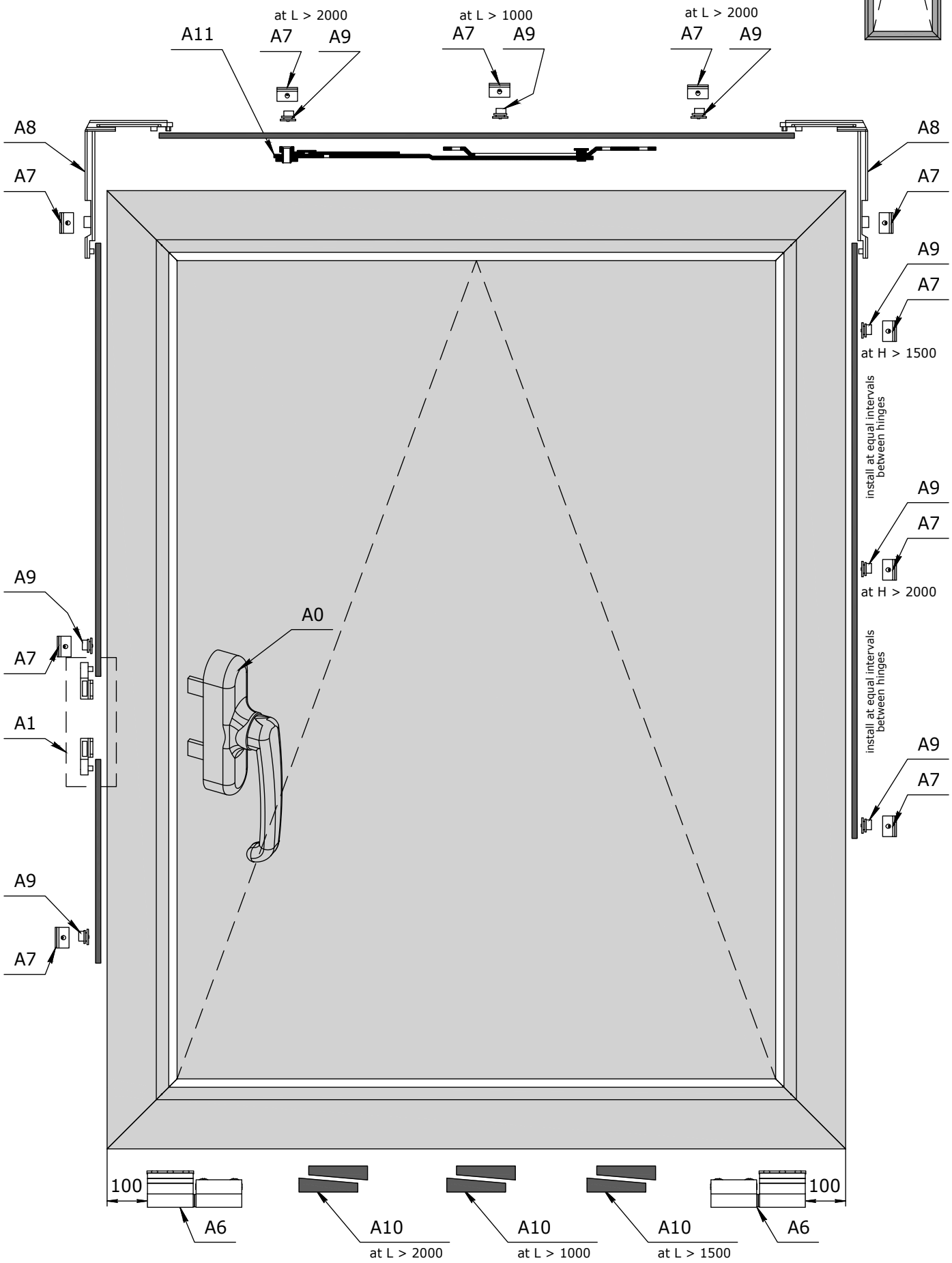

contents
profiles
delivery set
profiles (1:1)
sections
glazing tables
sub-assemblies tables
fitting arrangements
additional solutions
sub-assemblies
fire-resistant structures
connections
equipment and tools

Internal impost structural reinforcement. Installation of the internal grill.

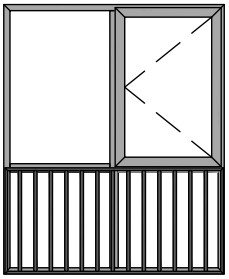

Grill with transoms **P30-401**

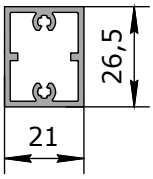

Grill with transoms **P00-009**

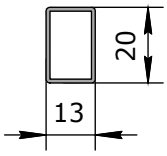

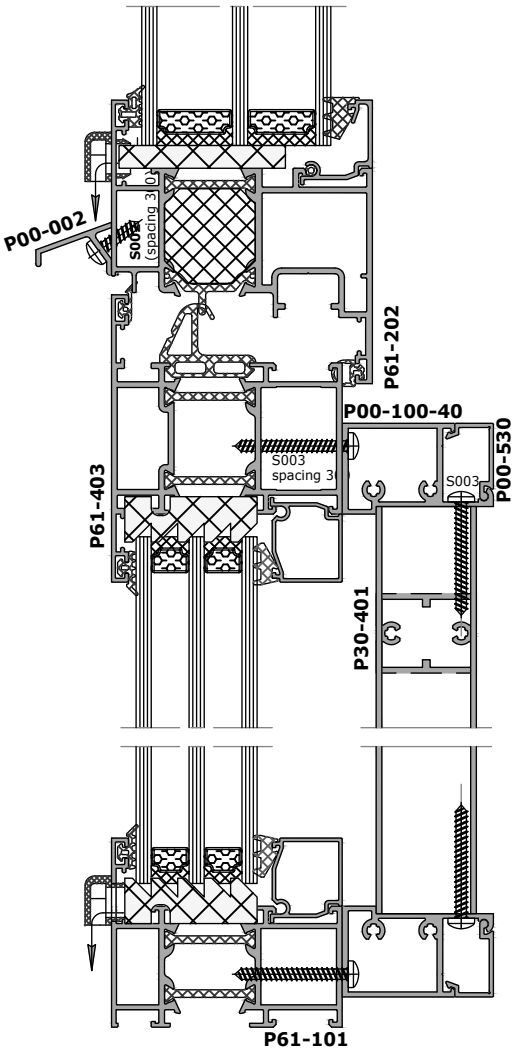

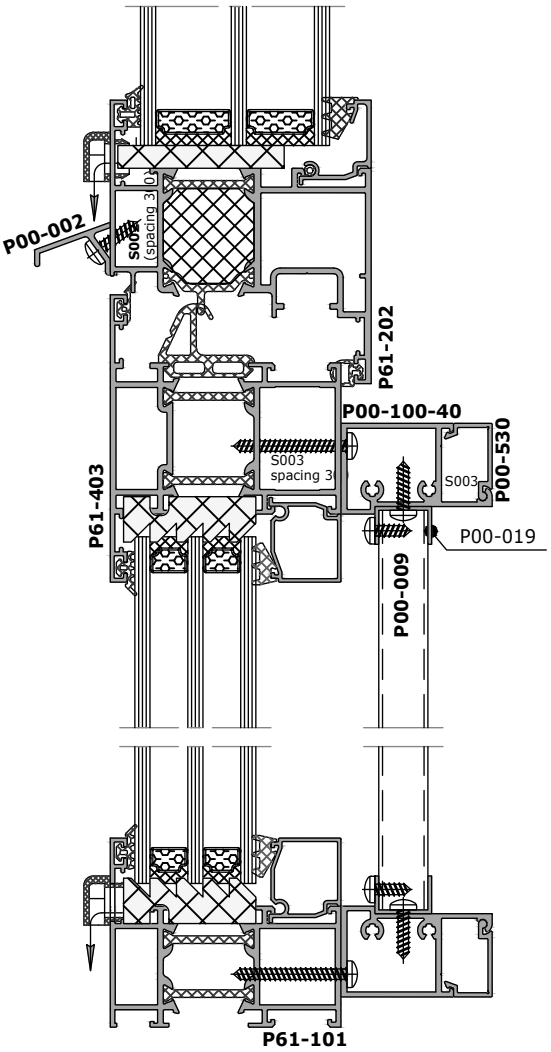

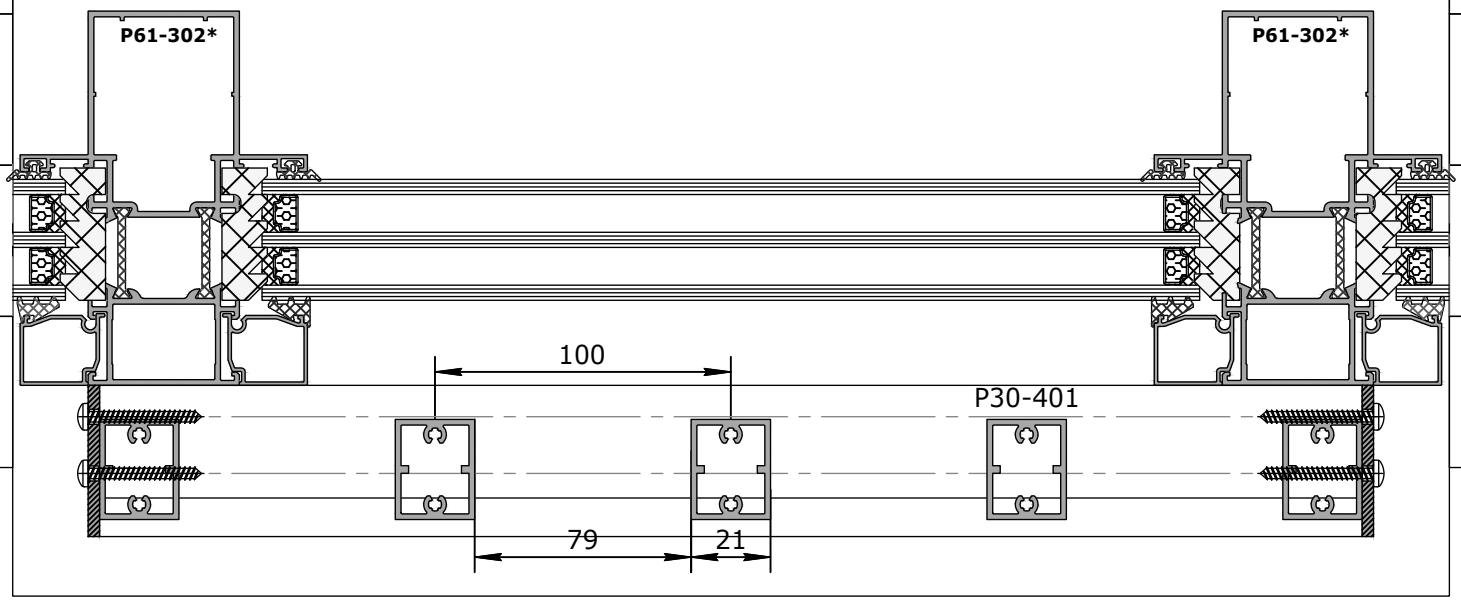

contents
profiles
delivery set
profiles (1:1)
sections
glazing tables
sub-assemblies tables
fitting arrangements
additional solutions
sub-assemblies
fire-resistant structures
connections
equipment and tools

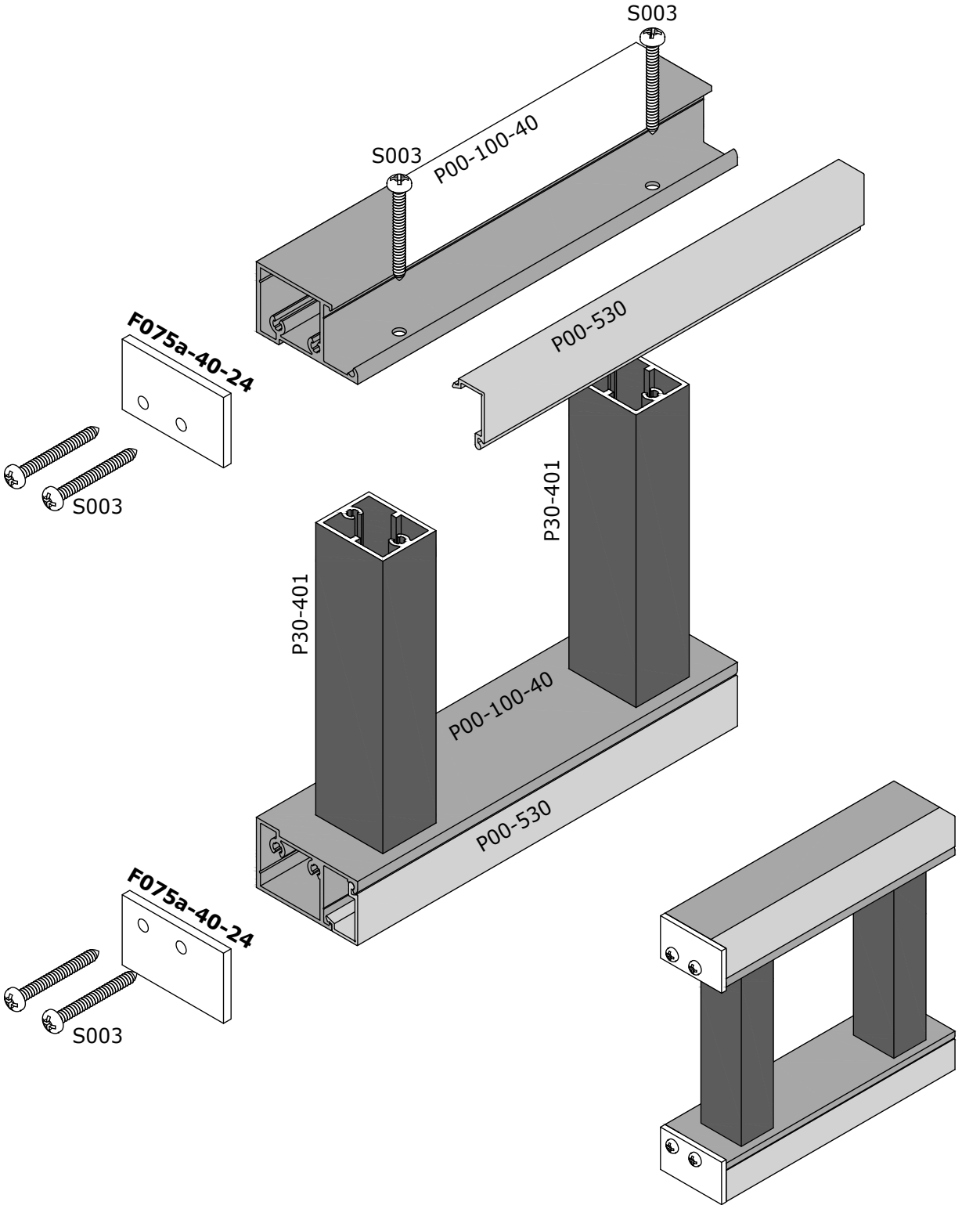

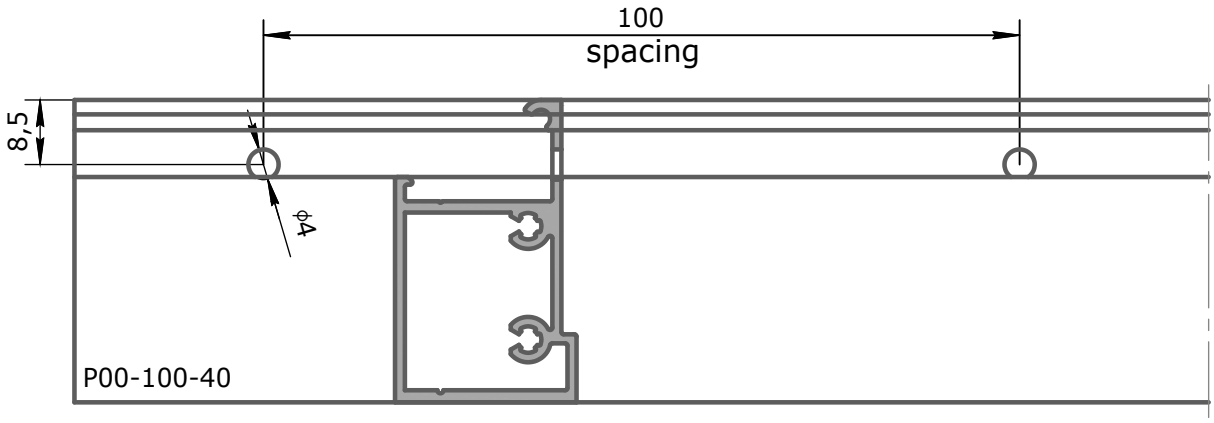

contents
profiles
delivery set
profiles (1:1)
sections
glazing tables
sub-assemblies tables
fitting arrangements
additional solutions
sub-assemblies
fire-resistant structures
connections
equipment and tools

contents
profiles
delivery set
profiles (1:1)
sections
glazing tables
sub-assemblies tables
fitting arrangements
additional solutions
sub-assemblies
fire-resistant structures
connections
equipment and tools

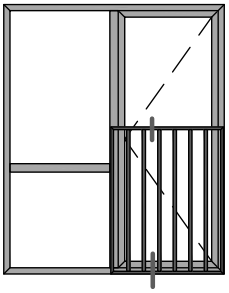

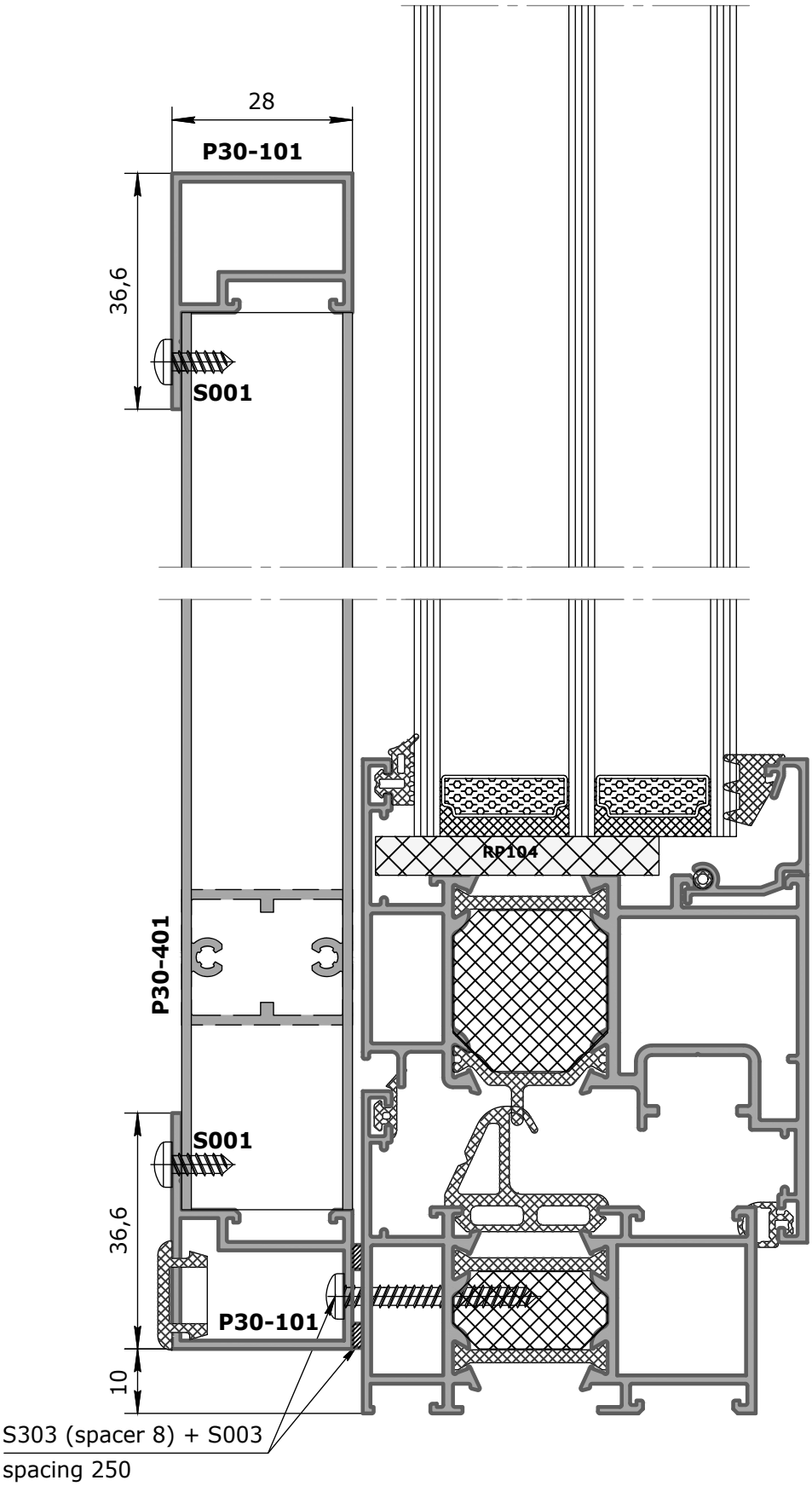

contents
profiles
delivery set
profiles (1:1)
sections
glazing tables
sub-assemblies tables
fitting arrangements
additional solutions
sub-assemblies
fire-resistant structures
connections
equipment and tools

contents
profiles
delivery set
profiles (1:1)
sections
glazing tables
sub-assemblies tables
fitting arrangements
additional solutions
sub-assemblies
fire-resistant structures
connections
equipment and tools

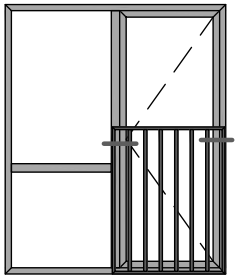

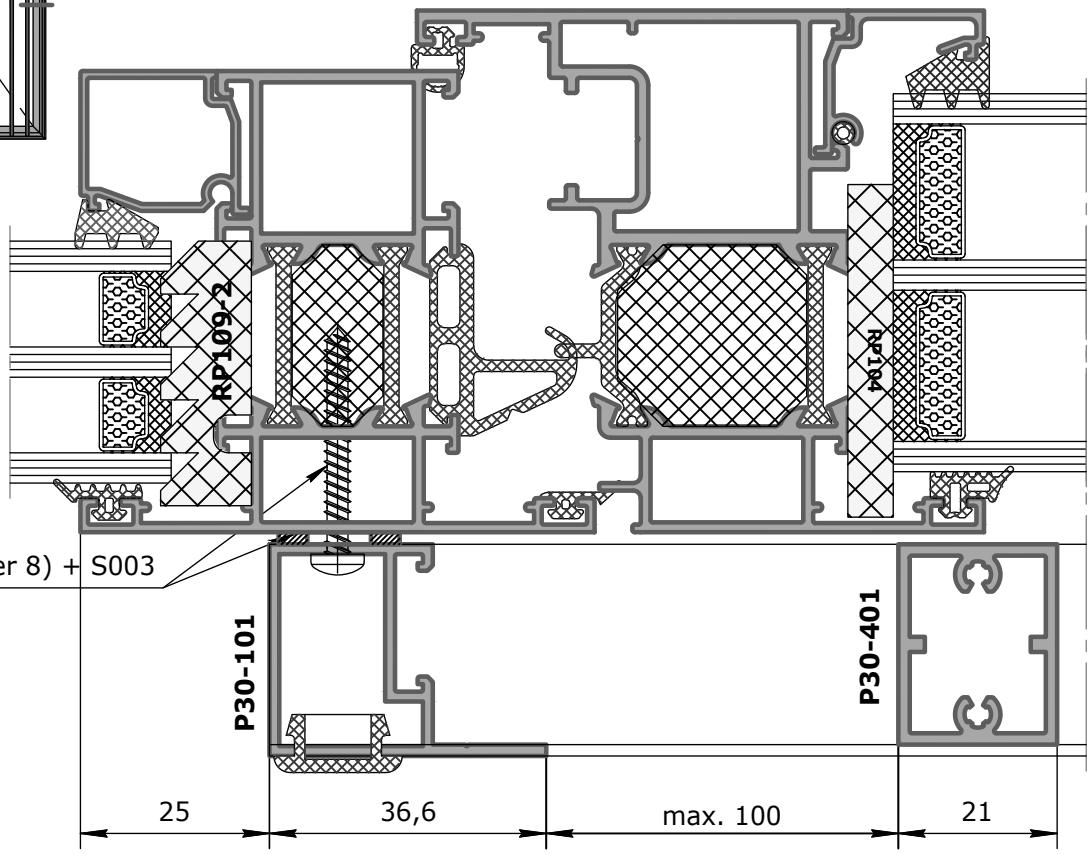

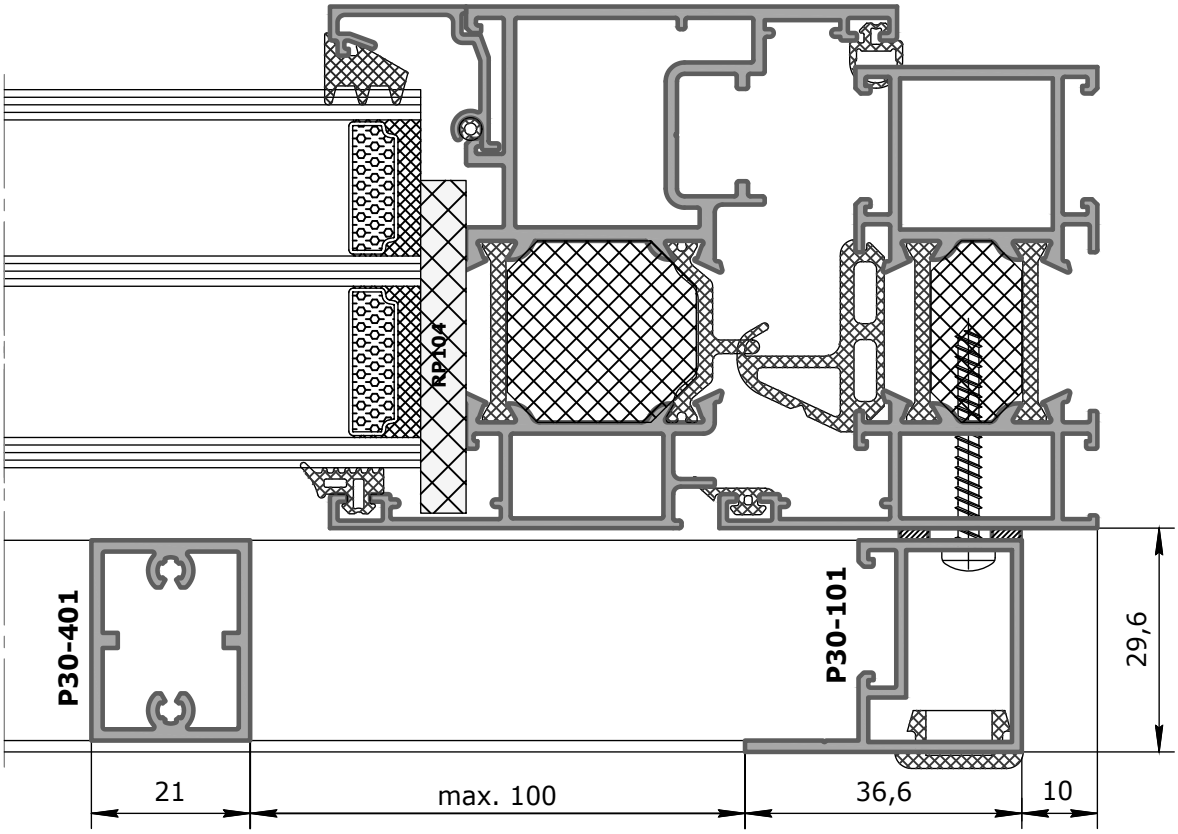

contents
profiles
delivery set
profiles (1:1)
sections
glazing tables
sub-assemblies tables
fitting arrangements
additional solutions
sub-assemblies
fire-resistant structures
connections
equipment and tools

contents
profiles
delivery set
profiles (1:1)
sections
glazing tables
sub-assemblies tables
fitting arrangements
additional solutions
sub-assemblies
fire-resistant structures
connections
equipment and tools

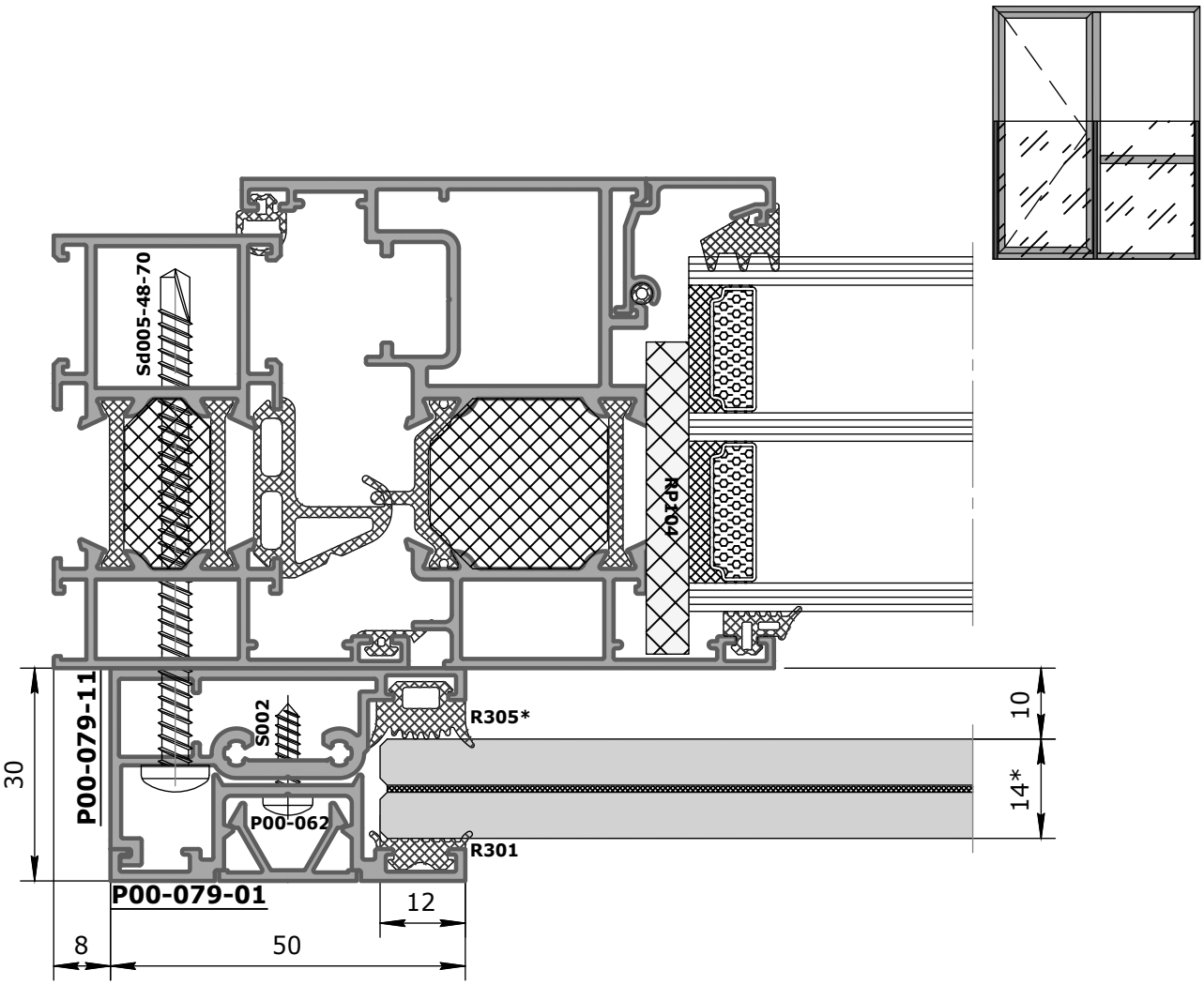

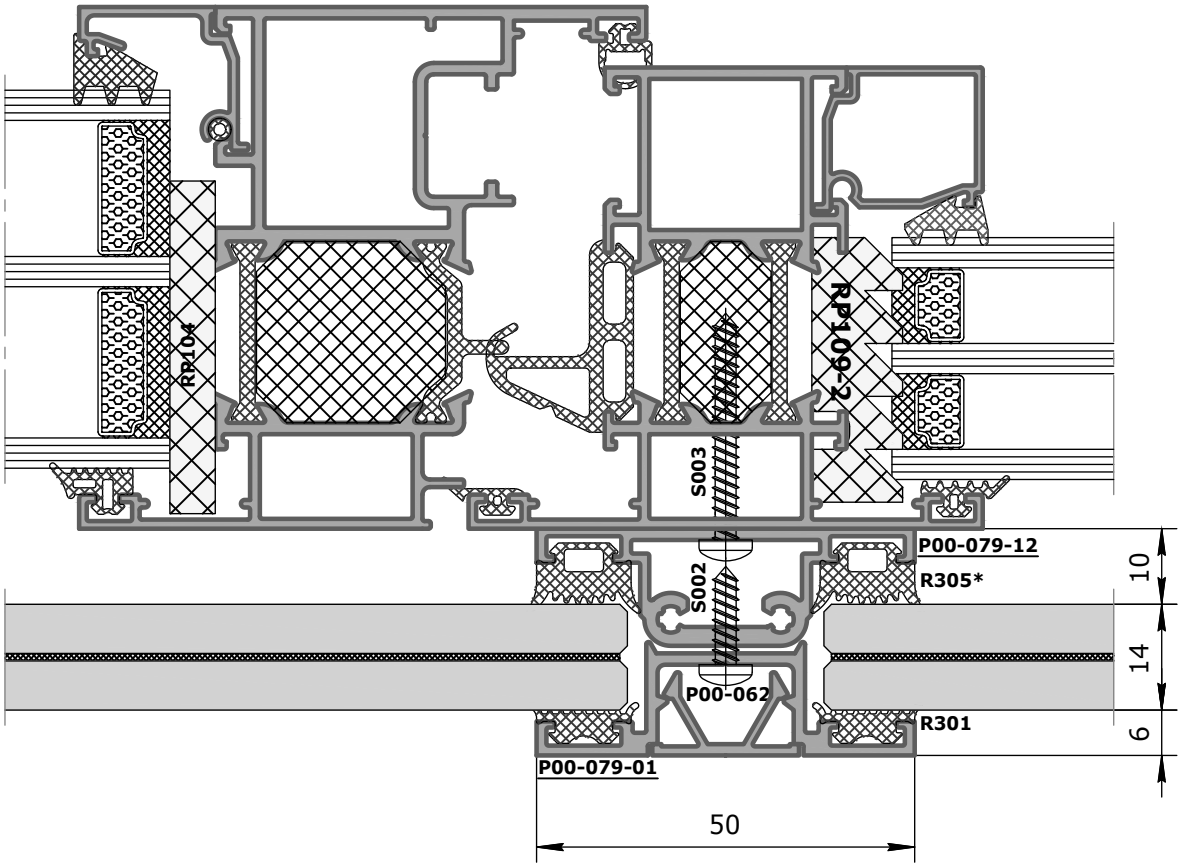

contents
profiles
delivery set
profiles (1:1)
sections
glazing tables
sub-assemblies tables
fitting arrangements
additional solutions
sub-assemblies
fire-resistant structures
connections
equipment and tools

contents
profiles
delivery set
profiles (1:1)
sections
glazing tables
sub-assemblies tables
fitting arrangements
additional solutions
sub-assemblies
fire-resistant structures
connections
equipment and tools

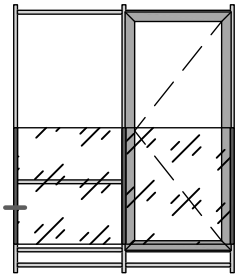

Version 1

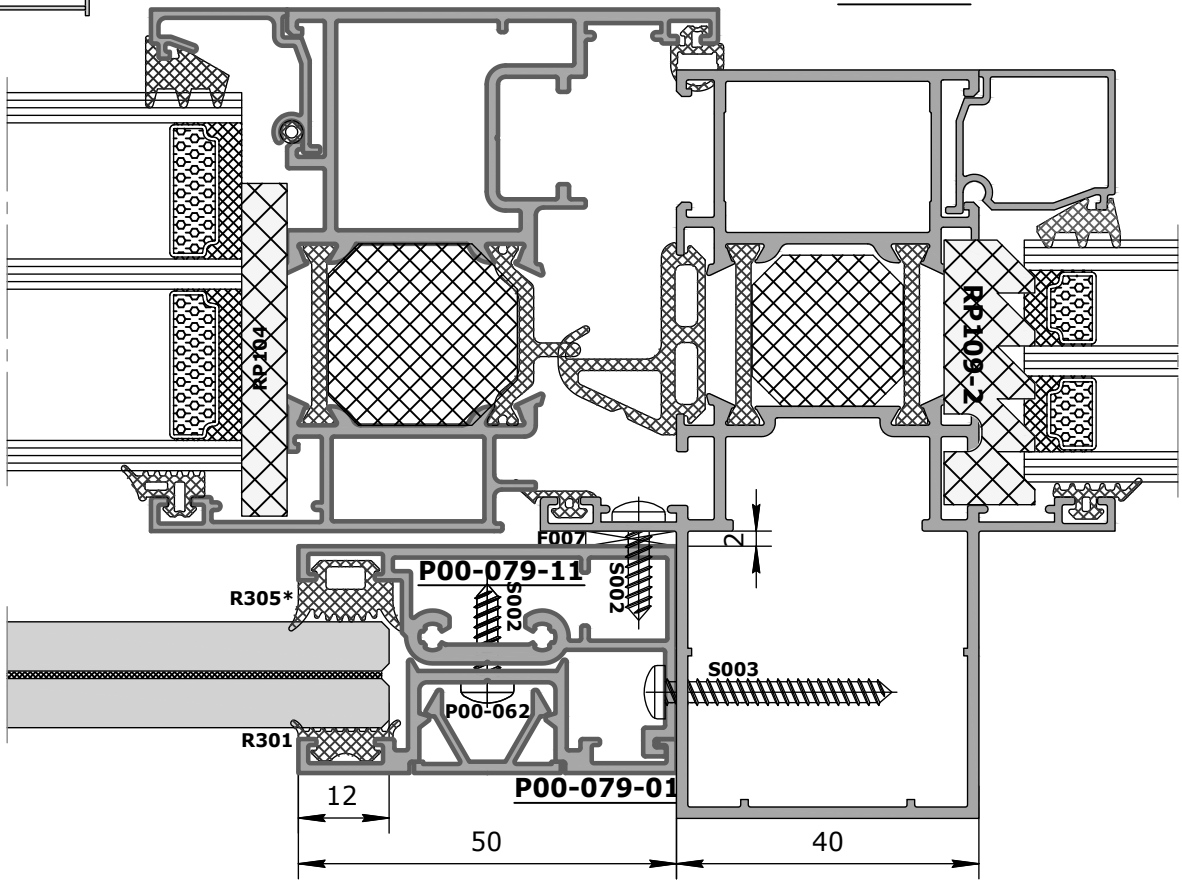

Version 2
(Scale 1:2)

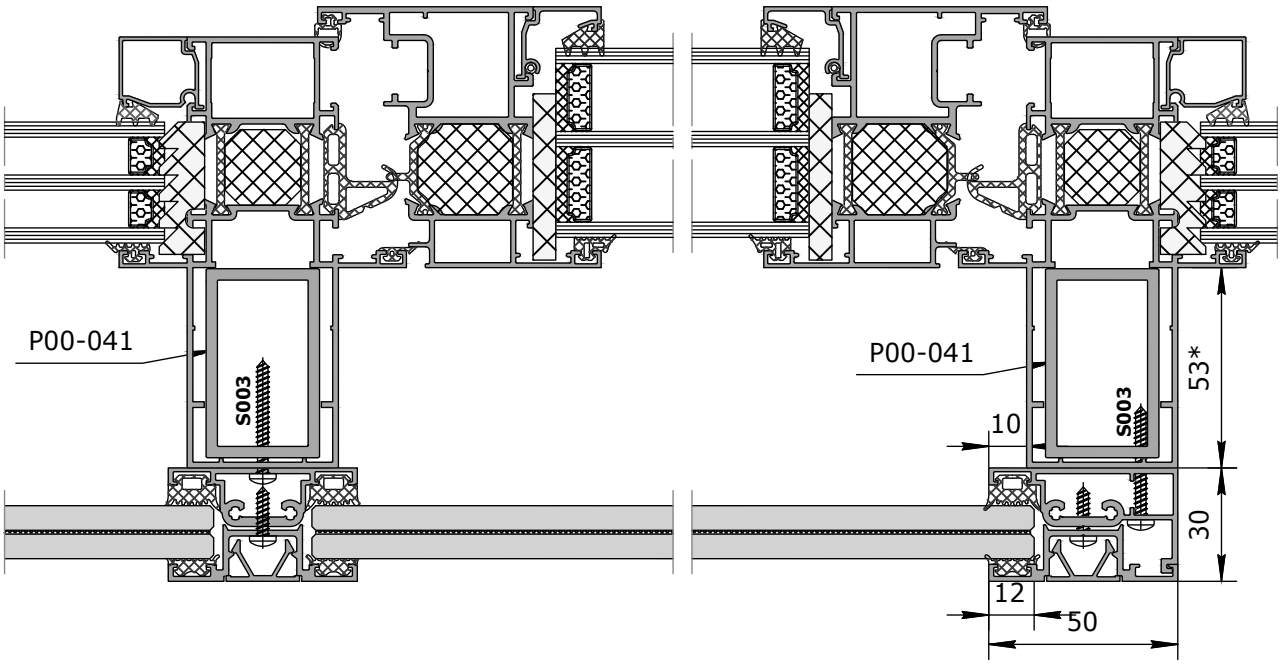

contents
profiles
delivery set
profiles (1:1)
sections
glazing tables
sub-assemblies tables
fitting arrangements
additional solutions
sub-assemblies
fire-resistant structures
connections
equipment and tools

10 mm offset screen assembly

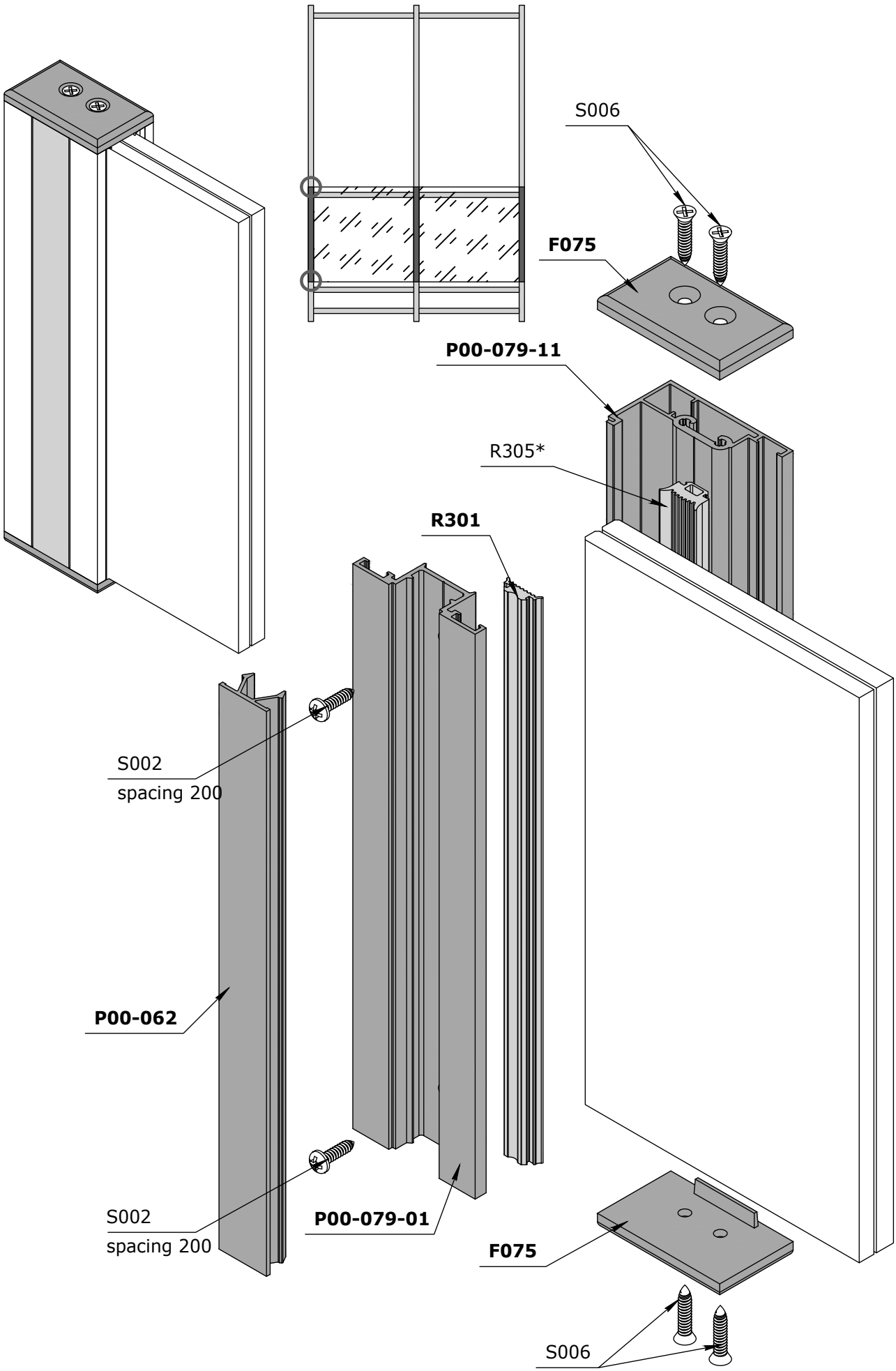

contents
profiles
delivery set
profiles (1:1)
sections
glazing tables
sub-assemblies tables
fitting arrangements
additional solutions
sub-assemblies
fire-resistant structures
connections
equipment and tools

contents
profiles
delivery set
profiles (1:1)
sections
glazing tables
sub-assemblies tables
fitting arrangements
additional solutions
sub-assemblies
fire-resistant structures
connections
equipment and tools

French balcony. External screen — offset 80 mm

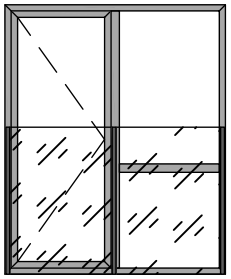

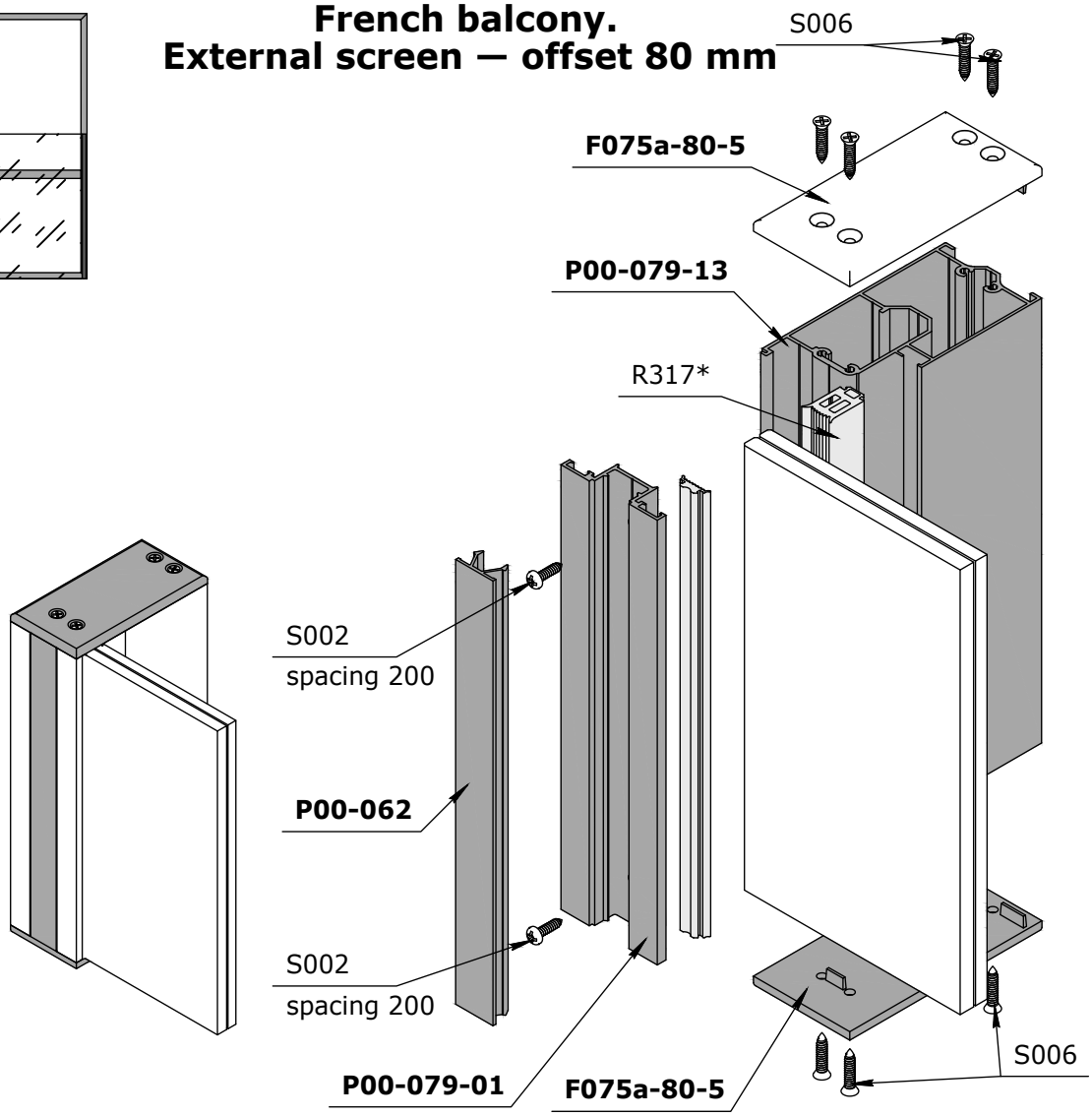

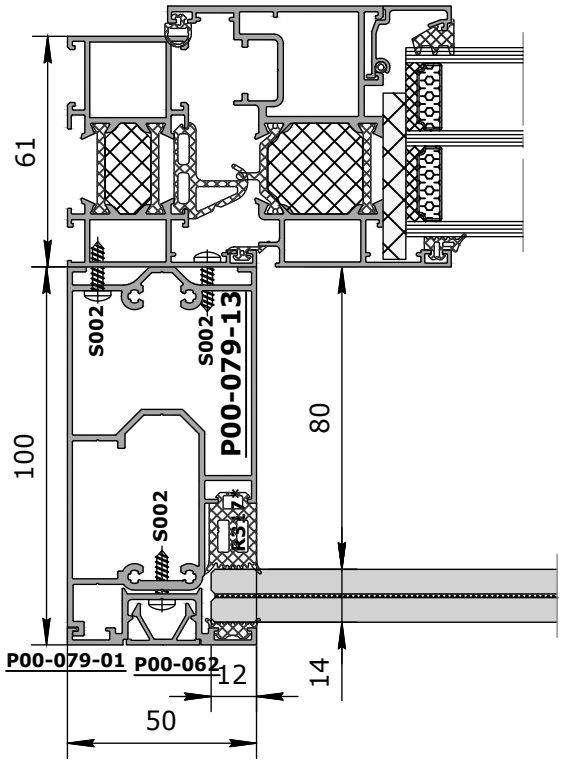

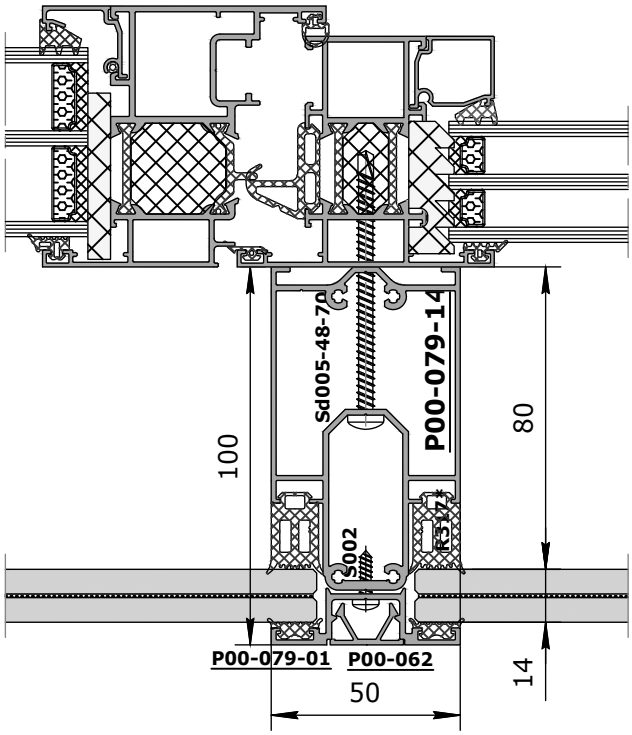

contents
profiles
delivery set
profiles (1:1)
sections
glazing tables
sub-assemblies tables
fitting arrangements
additional solutions
sub-assemblies
fire-resistant structures
connections
equipment and tools

Filling table: outdoor screens

filling thickness **A**	external gasket	internal gasket **B**
6	**R301** 1.5 mm	**R313** – 13.5 mm
8		**R311** – 11.5 mm
10		**R309** – 9.5 mm
12		**R307** – 7.5 mm
14		**R305** – 5.5 mm
16		**R303** – 3.5 mm
18		**R301** – 1.5 mm

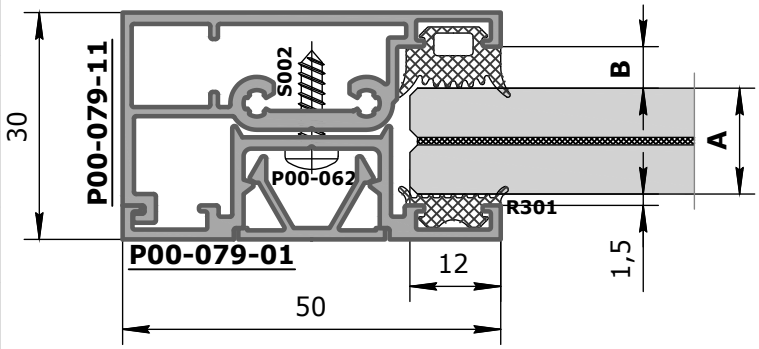

filling thickness **A**	external gasket	internal gasket **B**
2	**R309** 9.5 mm	**R323** – 23.5 mm
4		**R321** – 21.5 mm
6		**R319** – 19.5 mm
8	**R301** 1.5 mm	**R323** – 23.5 mm
10		**R321** – 21.5 mm
12		**R319** – 19.5 mm
14		**R317** – 17.5 mm
16		**R315** – 15.5 mm
18		**R313** – 13.5 mm
20		**R311** – 11.5 mm
22		**R309** – 9.5 mm
24		**R307** – 7.5 mm
26		**R305** – 5.5 mm
28		**R303** – 3.5 mm
30		**R301** – 1.5 mm

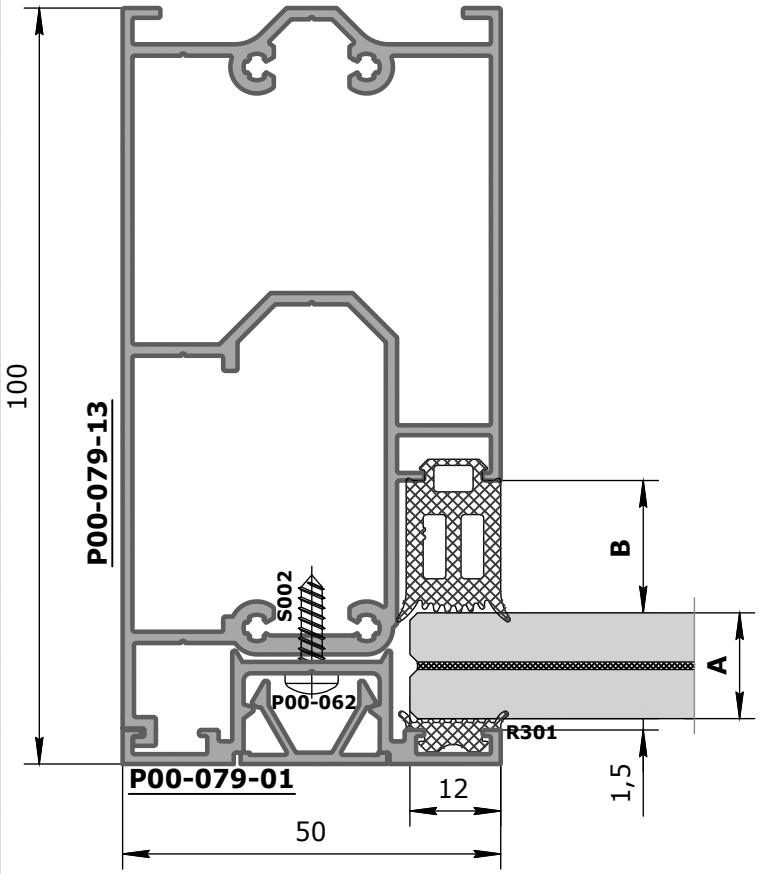

contents
profiles
delivery set
profiles (1:1)
sections
glazing tables
sub-assemblies tables
fitting arrangements
additional solutions
sub-assemblies
fire-resistant structures
connections
equipment and tools

Version 1-1: frame mounting.
single handrail holders

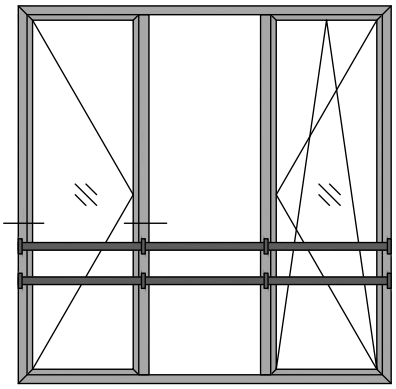

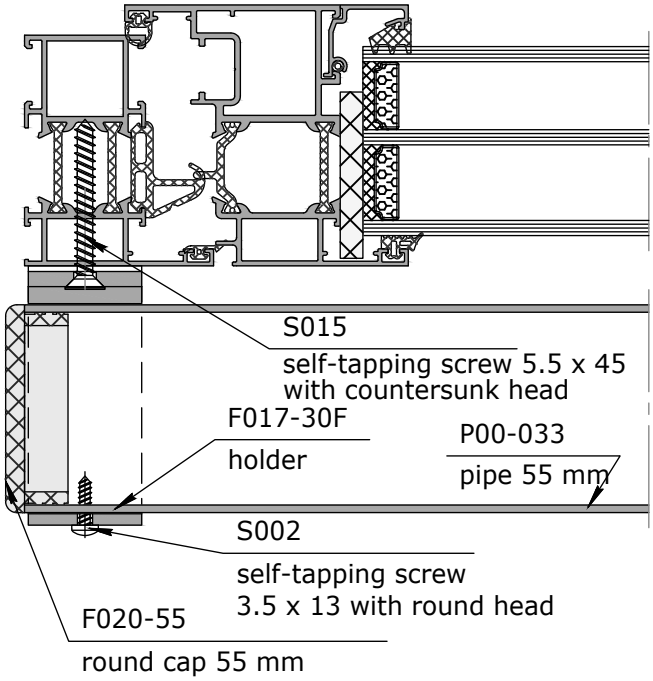

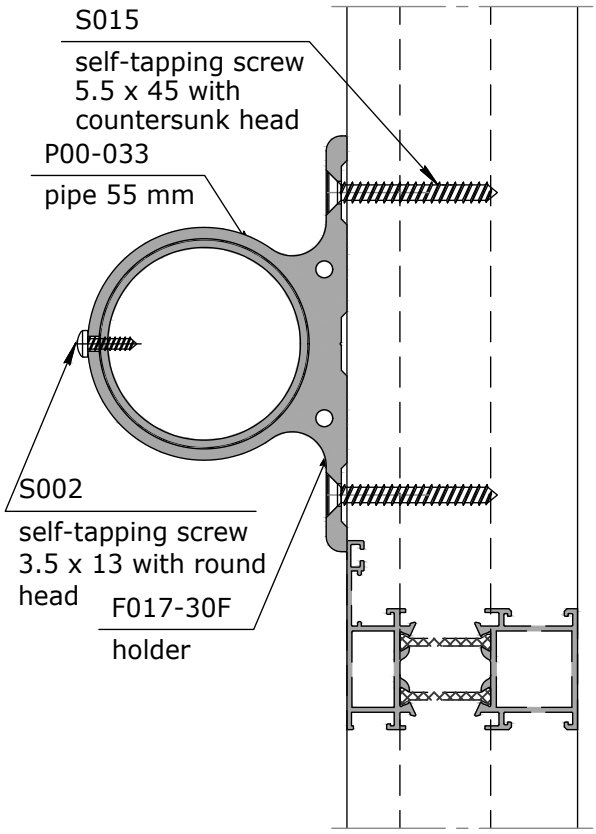

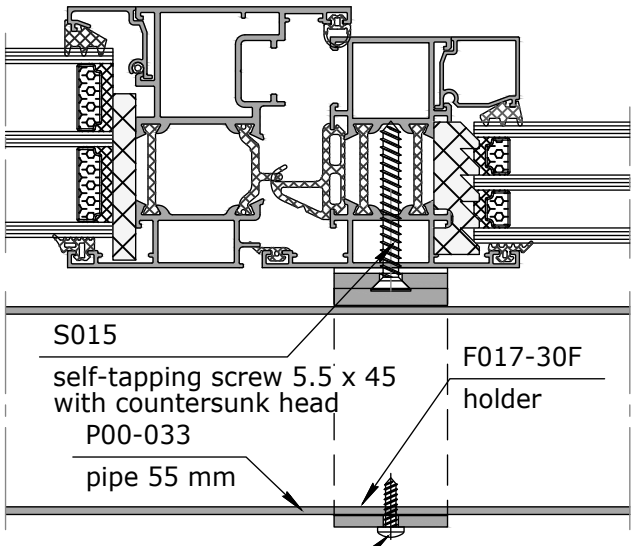

F017-30F
frame holder 30 mm

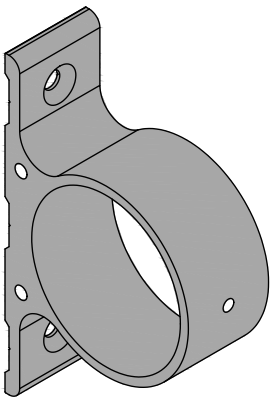

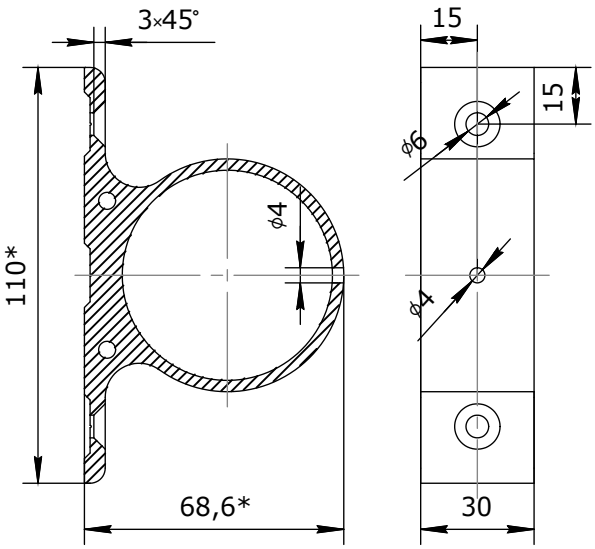

contents
profiles
delivery set
profiles (1:1)
sections
glazing tables
sub-assemblies tables
fitting arrangements
additional solutions
sub-assemblies
fire-resistant structures
connections
equipment and tools

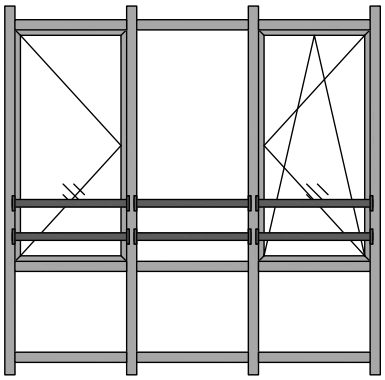

Version 1-2: stained-glass mounting.
single handrail holders

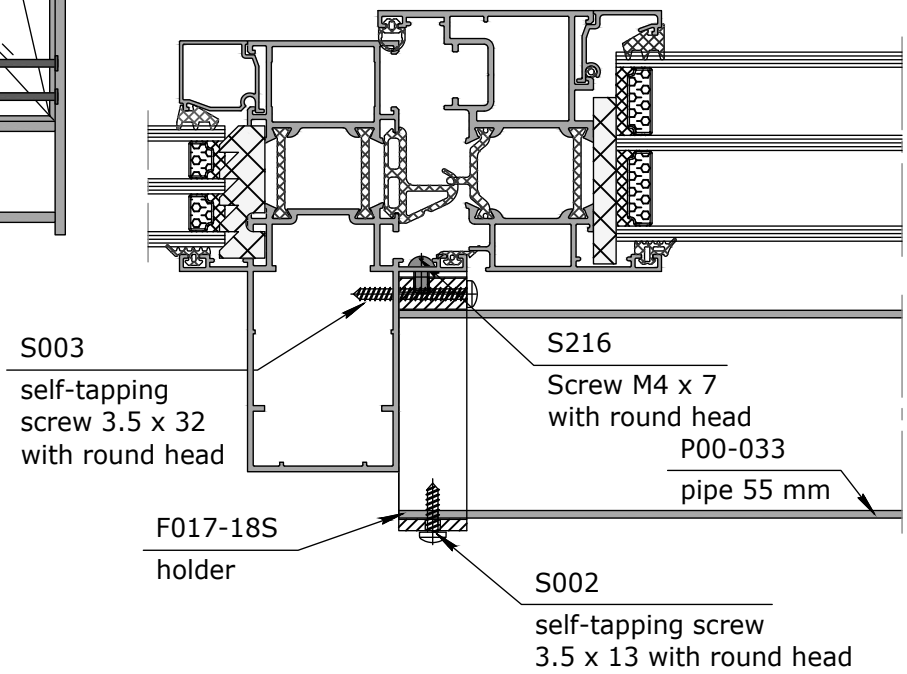

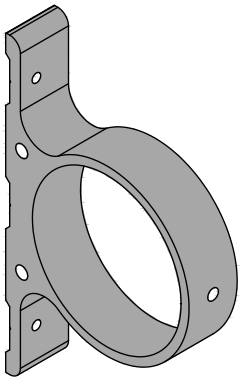

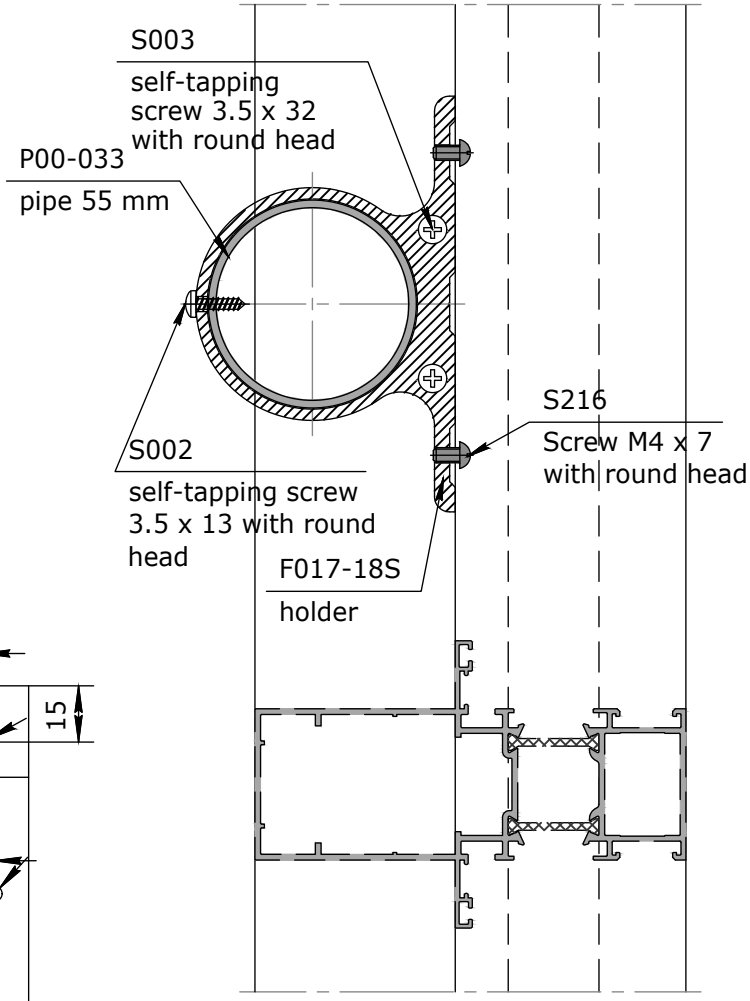

F017-18S
mullion holder 18 mm

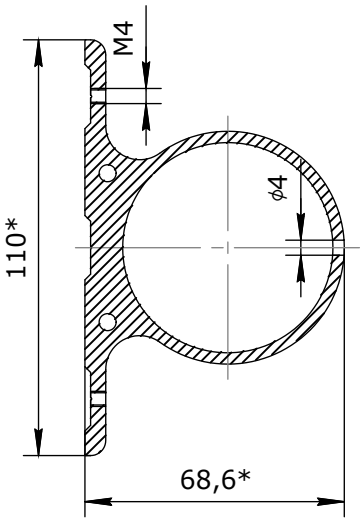

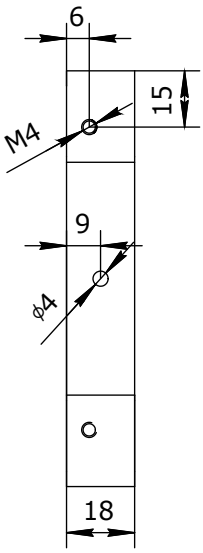

contents
profiles
delivery set
profiles (1:1)
sections
glazing tables
sub-assemblies tables
fitting arrangements
additional solutions
sub-assemblies
fire-resistant structures
connections
equipment and tools

Version 2-1: frame mounting.
vertical handrail holders

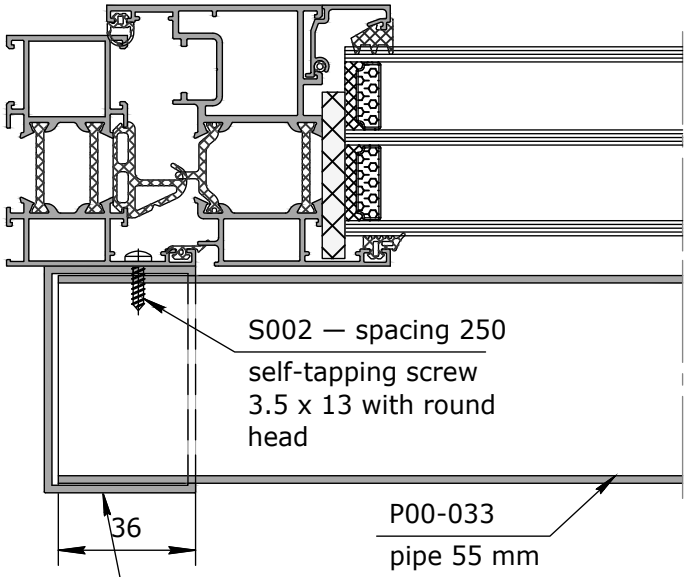

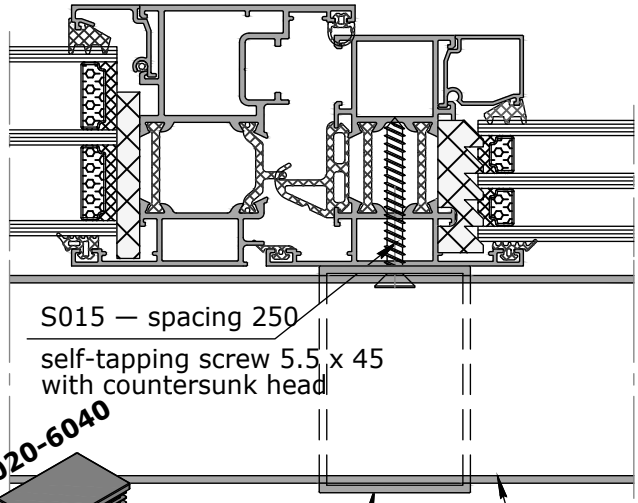

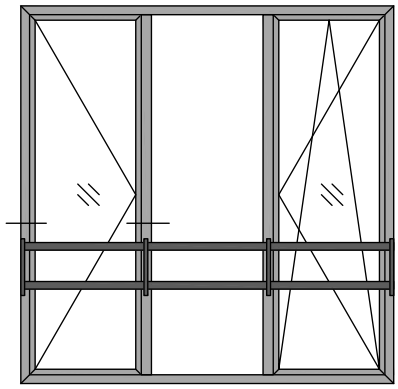

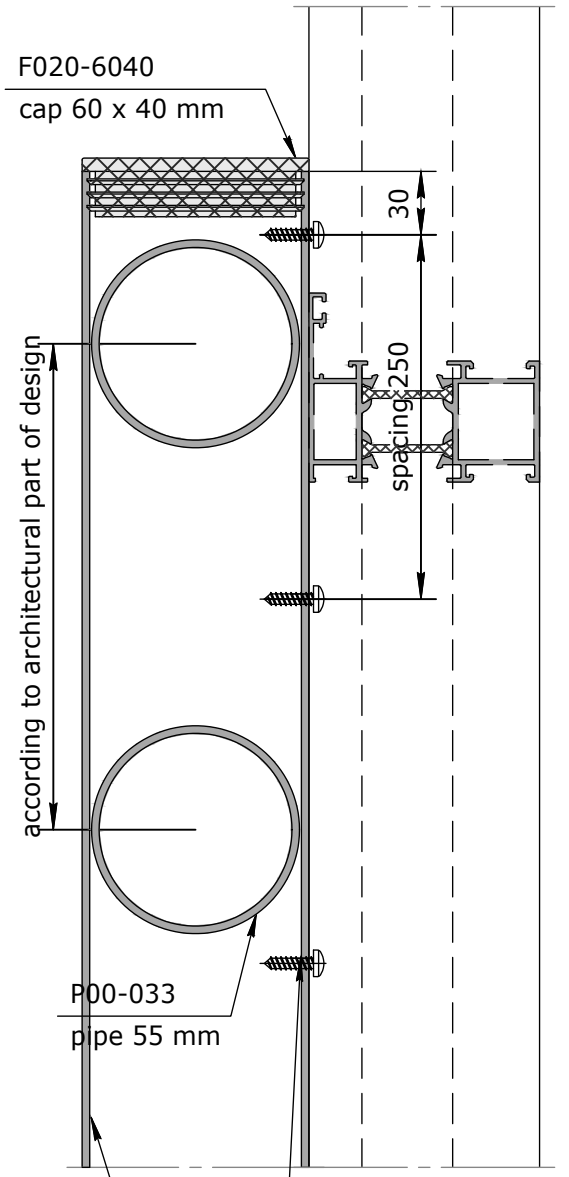

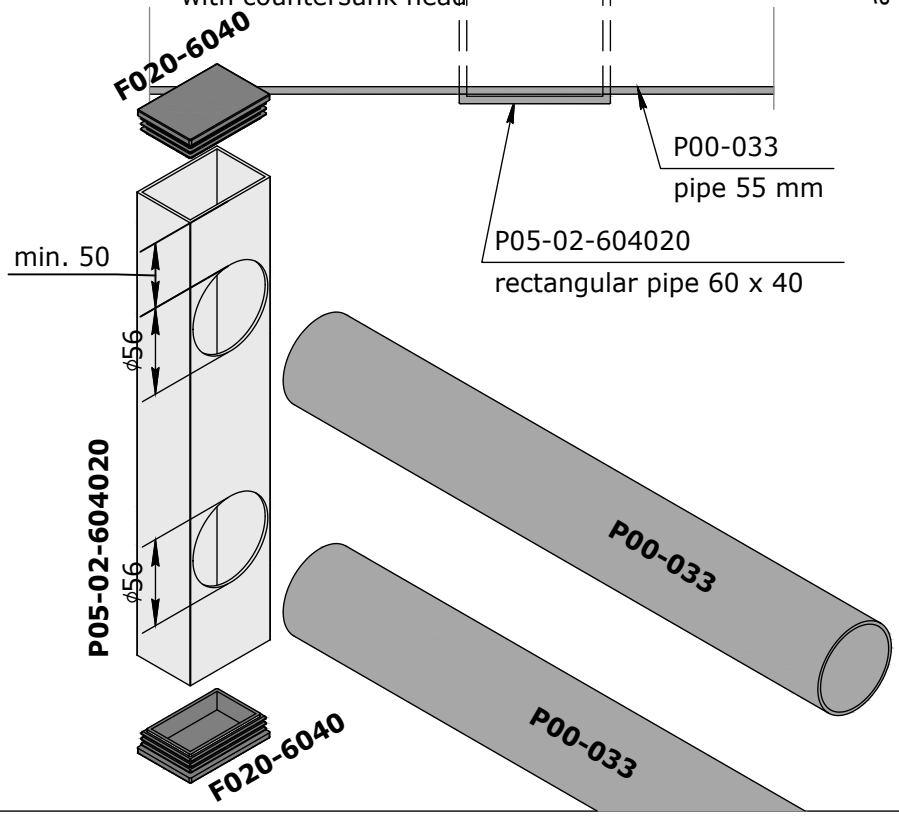

contents
profiles
delivery set
profiles (1:1)
sections
glazing tables
sub-assemblies tables
fitting arrangements
additional solutions
sub-assemblies
fire-resistant structures
connections
equipment and tools

contents
profiles
delivery set
profiles (1:1)
sections
glazing tables
sub-assemblies tables
fitting arrangements
additional solutions
sub-assemblies
fire-resistant structures
connections
equipment and tools

Version 2-2: stained-glass mounting. vertical handrail holders

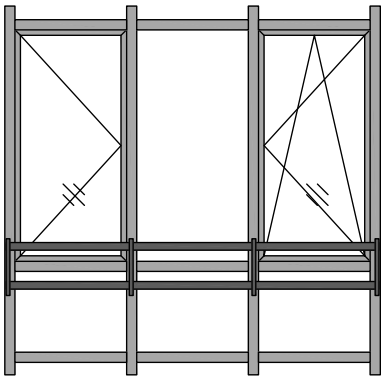

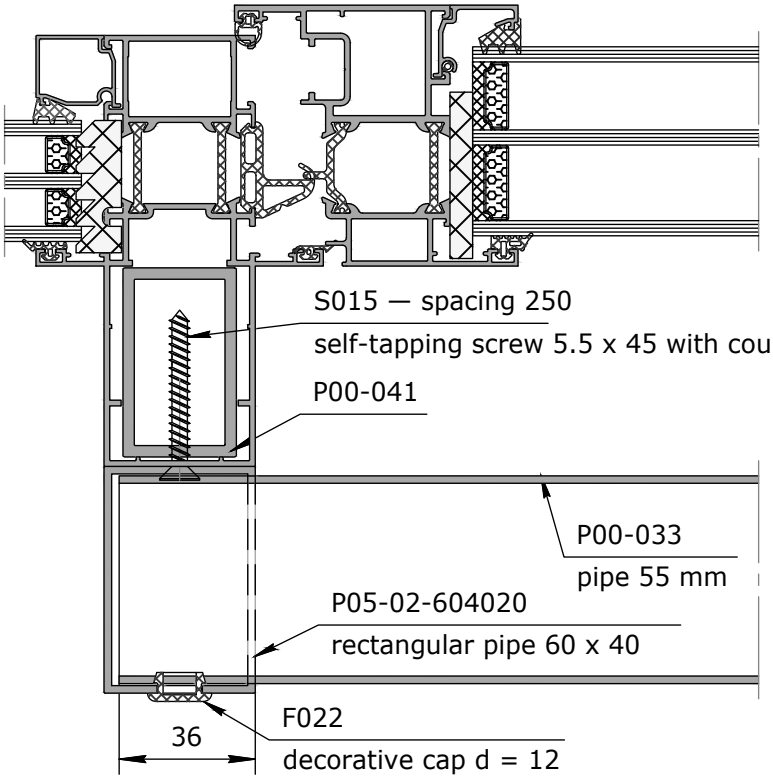

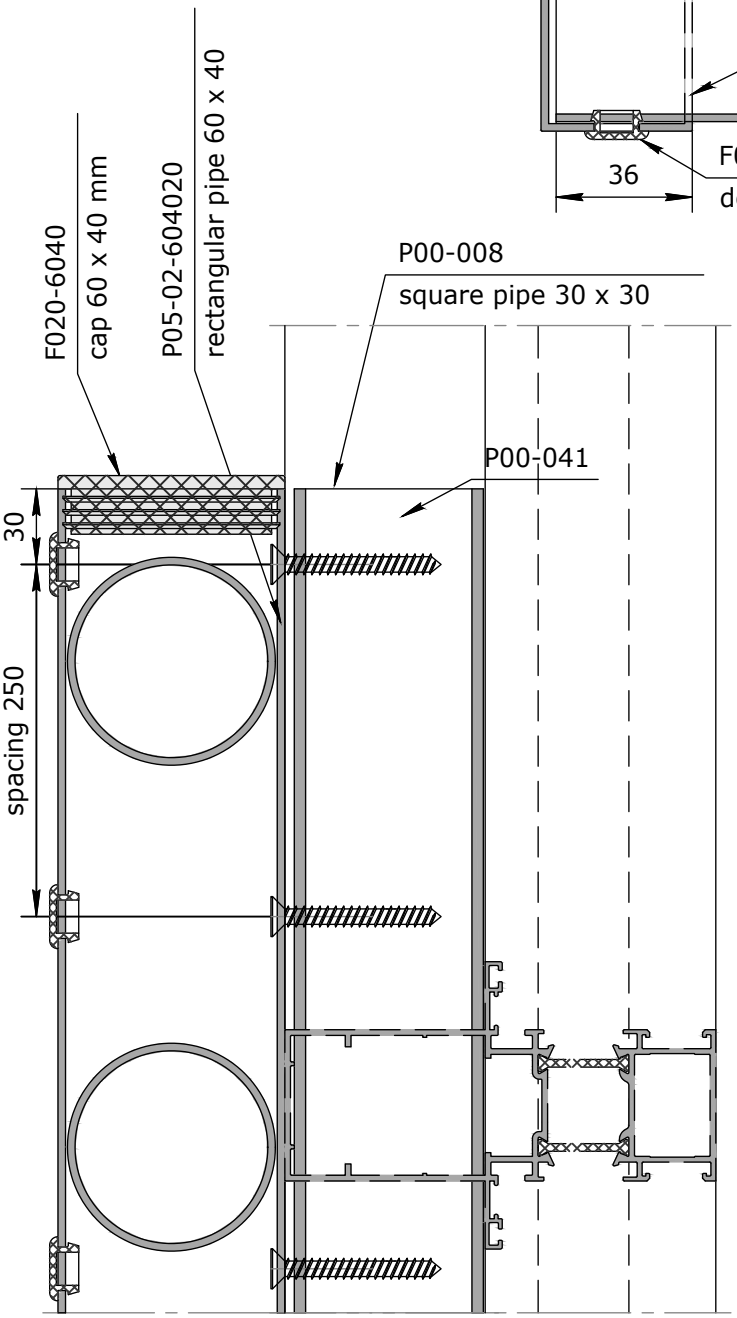

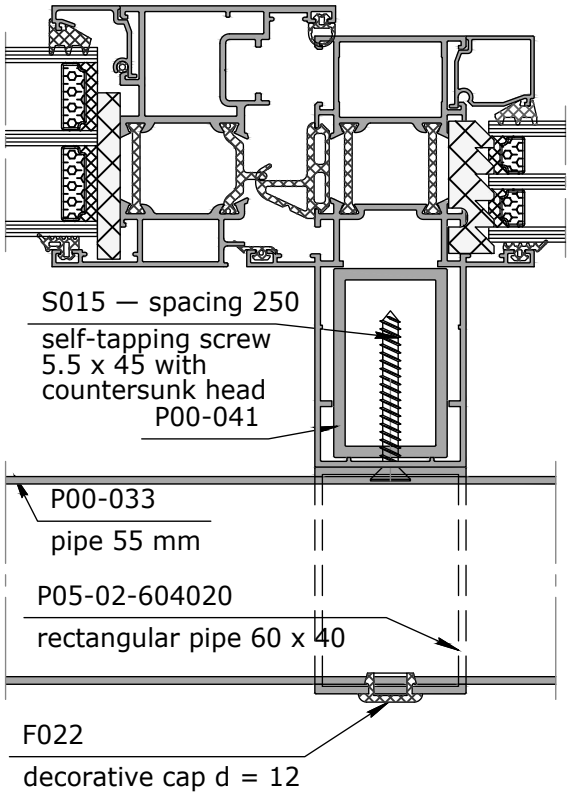

contents
profiles
delivery set
profiles (1:1)
sections
glazing tables
sub-assemblies tables
fitting arrangements
additional solutions
sub-assemblies
fire-resistant structures
connections
equipment and tools

Version 3-1: frame mounting. rectangular handrail

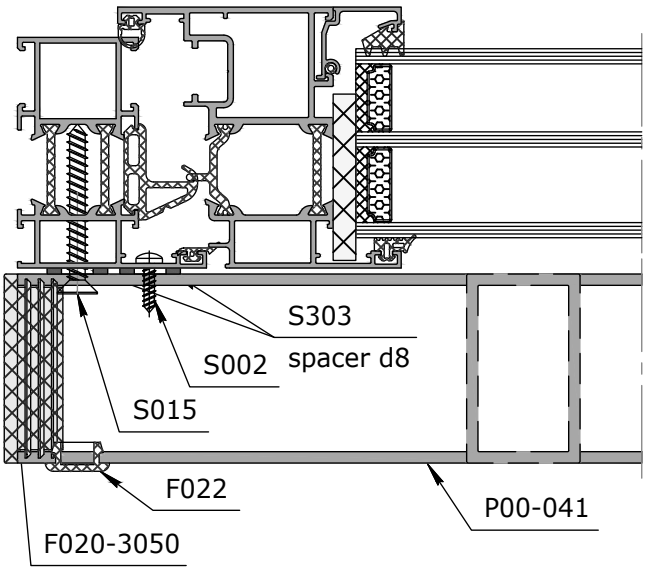

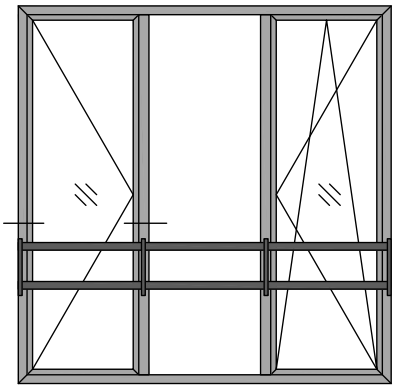

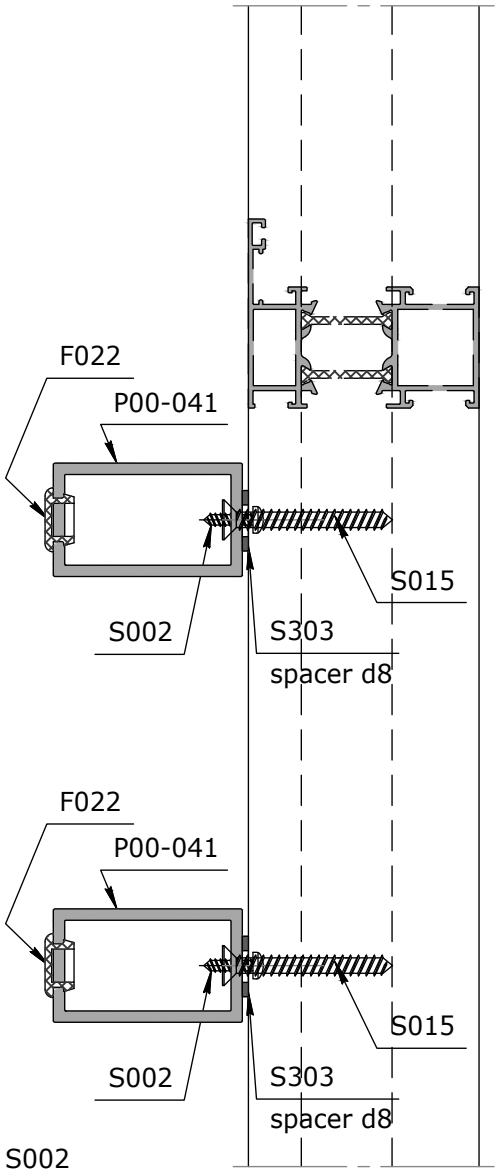

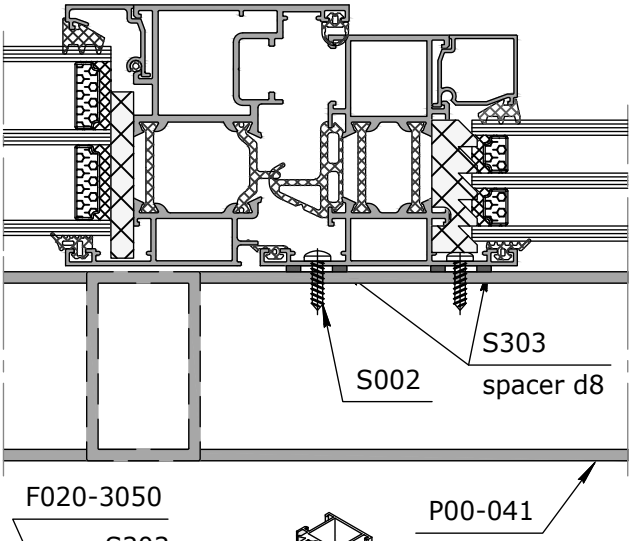

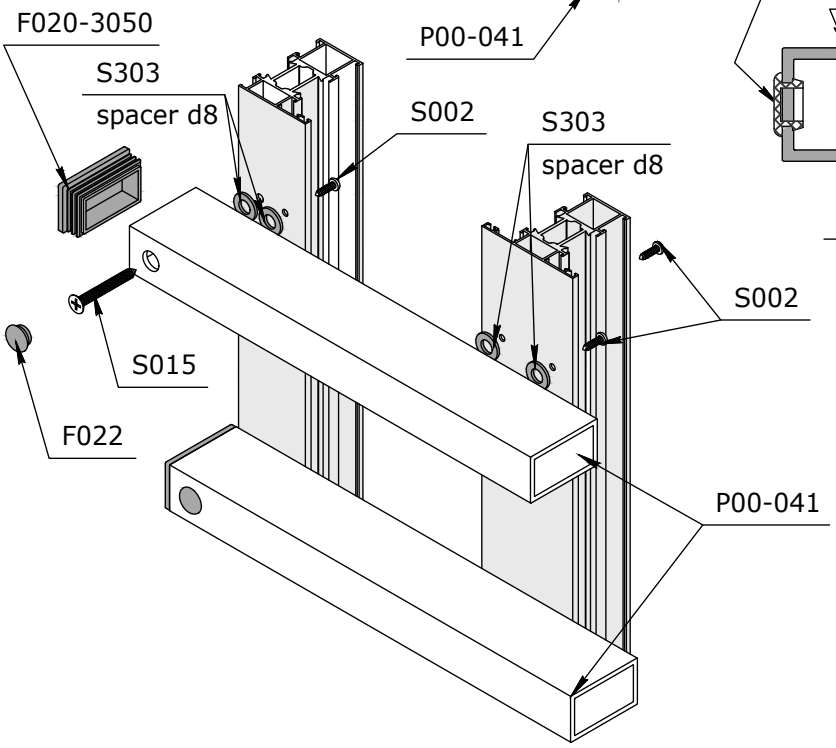

contents
profiles
delivery set
profiles (1:1)
sections
glazing tables
sub-assemblies tables
fitting arrangements
additional solutions
sub-assemblies
fire-resistant structures
connections
equipment and tools

Version 3-2: stained-glass mounting. rectangular handrail

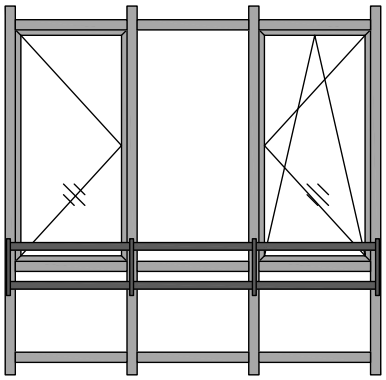

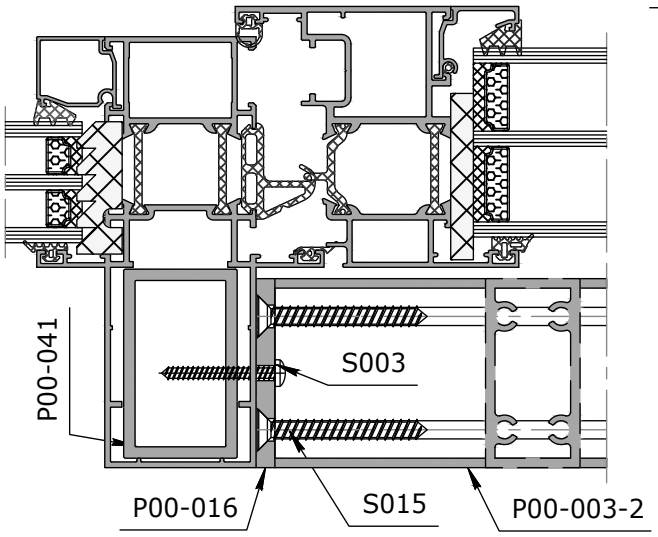

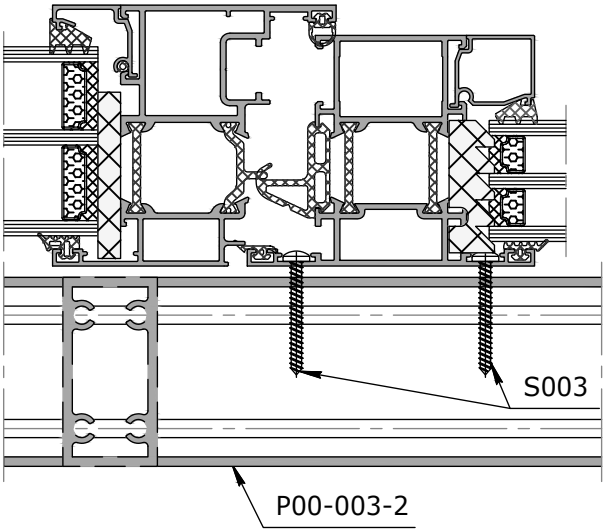

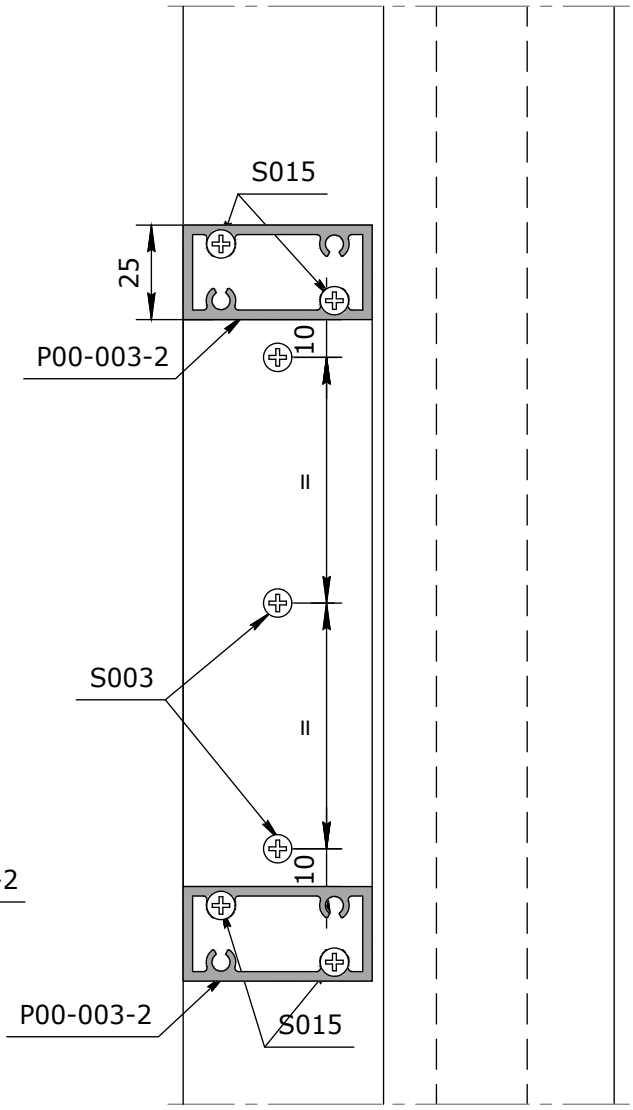

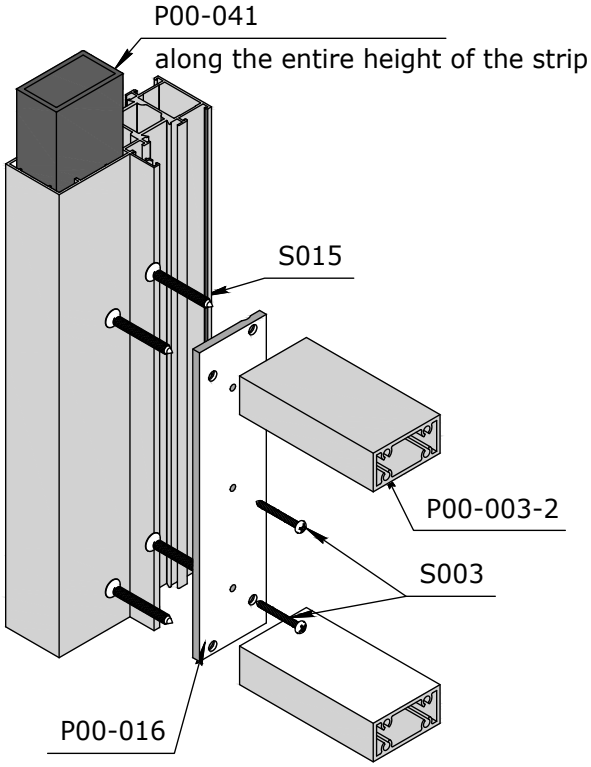

contents
profiles
delivery set
profiles (1:1)
sections
glazing tables
sub-assemblies tables
fitting arrangements
additional solutions
sub-assemblies
fire-resistant structures
connections
equipment and tools

Installation from the inside
Round handrail

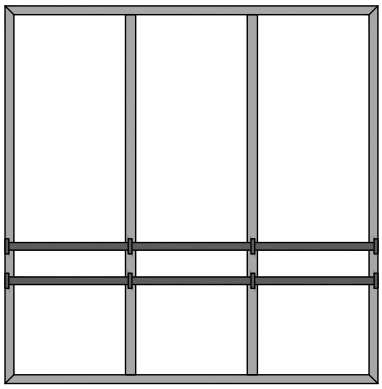

Installation on "warm" profiles

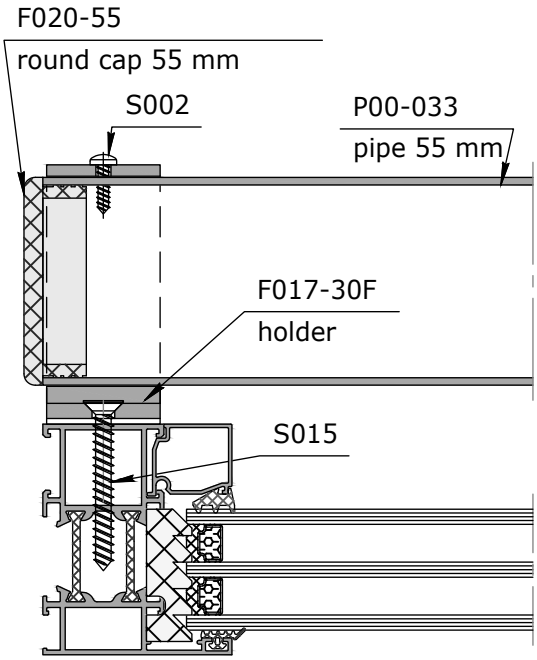

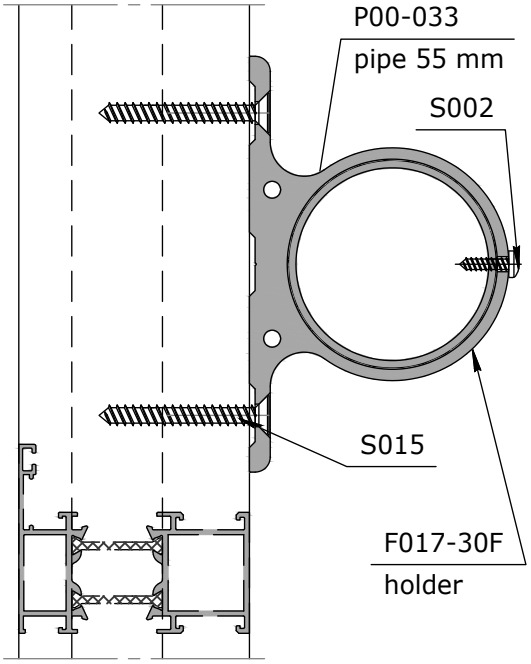

contents
profiles
delivery set
profiles (1:1)
sections
glazing tables
sub-assemblies tables
fitting arrangements
additional solutions
sub-assemblies
fire-resistant structures
connections
equipment and tools

P00-033
circular pipe 55 x 2

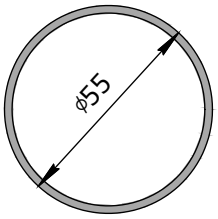

J_x = 11.71 cm^{-4}
J_y = 11.71 cm^{-4}

P00-003-2
handrail 25 x 50

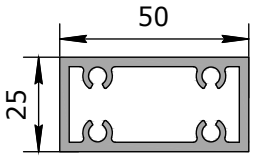

J_x = 3.98 cm^{-4}
J_y = 12.71 cm^{-4}

P00-041
rectangular pipe
50 x 30 x 3

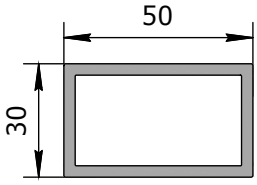

J_x = 6.18 cm^{-4}
J_y = 14.2 cm^{-4}

Horizontal handrail profile design

installation with intermediate fixing

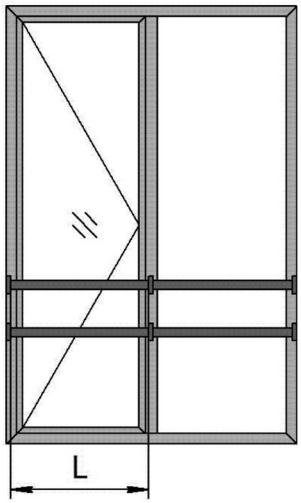

installation without intermediate fixing

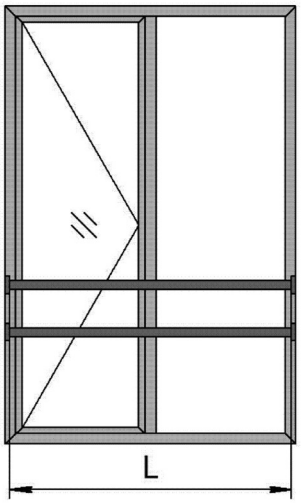

- L — working length of the profile. It is taken equal to the distance between the handrail attachment points $L := 180\ [sm]$
- m — weight of the handrail profile; an average value of 1.5 kg/running meter is assumed. $m := 0.015\ [kg/sm]$
- E — modulus of elasticity. For aluminium, E = 710,000 kgf/cm²; for steel, E = 2,100,000 kgf/cm². $E := 710000\ [kg/sm^2]$
- q — standard value of the external load. It is assumed to be 0.5 kN/m (according to SP 20.13330.2016, para. 8.3.2) $q := 0.5099\ [kg/sm]$
- γ_t — the reliability factor in relation to loading is taken according to SP 20.13330.2016, para. 8.3.4; $\gamma_t := 1.2$
- $f_{доп}$ — maximum permissible sagging of the handrail. We define it according to SP 20.13330.2016, appendix D.2, Table D1, paras. 2a and 3, as for a span not exceeding 3 m.
- $Jy1$ — the required moment of inertia when sagging is caused by an external load
- $Jy2$ — the required moment of inertia when sagging is caused by the profile's own weight

$f_{perm.} := \frac{L}{150}$ $\quad f_{perm.} := 1.2\ [sm]$

The horizontal profile is designed according to the stiffness condition depending on the wind load. The standard external load is taken as the external load applied to the structure. The performance condition for this criterion can be written as **$f_{perm.}$ > $f_{act.}$**.

$$Jy1 := \frac{5}{384} \cdot \frac{q \cdot L^4 \cdot \gamma_t}{E \cdot f_{perm.}} \qquad Jy1 = 9.82\ [sm^{-4}]$$

$$Jy2 := \frac{5 \cdot m \cdot L^4 \cdot \gamma_t}{384 \cdot E \cdot f_{perm.}} \qquad Jy2 = 0.289\ [sm^{-4}]$$

$$Jy_{req.} := Jy1 + Jy2 \qquad Jy_{req.} = 10.105\ [sm^{-4}]$$

contents
profiles
delivery set
profiles (1:1)
sections
glazing tables
sub-assemblies tables
fitting arrangements
additional solutions
sub-assemblies
fire-resistant structures
connections
equipment and tools

L-joint assembly
Narrow frame P61-101

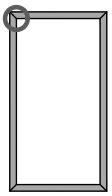

Apply one- or two-component aluminium bonding adhesive (**E006**) into the profile chamber and on the ends of the bonded profiles before installing the embedded parts. Remove any excess adhesive and wipe the joint with a special cleaner (**E007**).

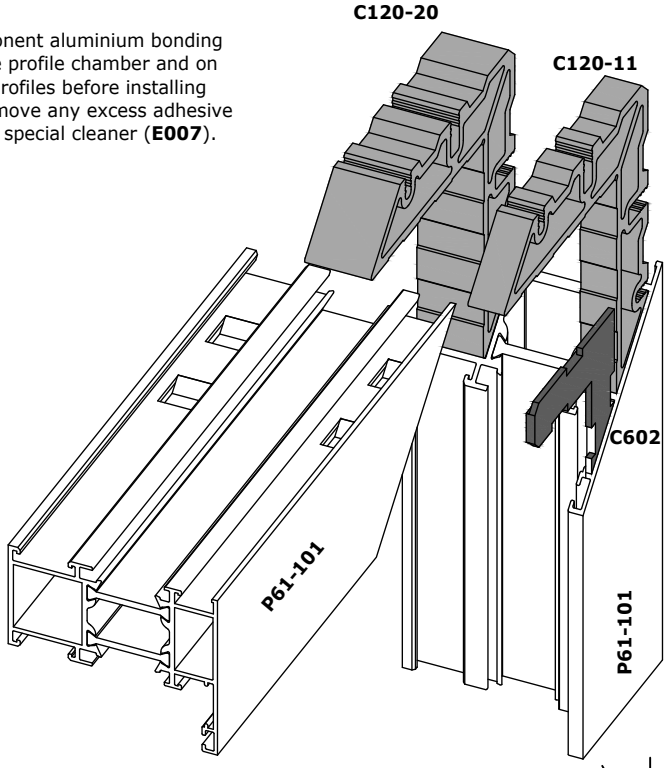

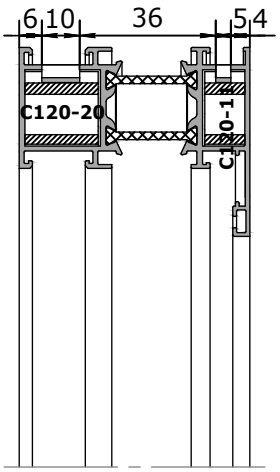

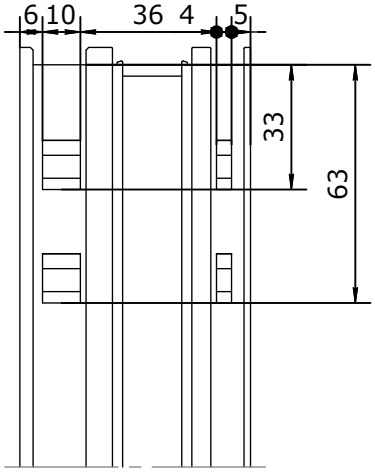

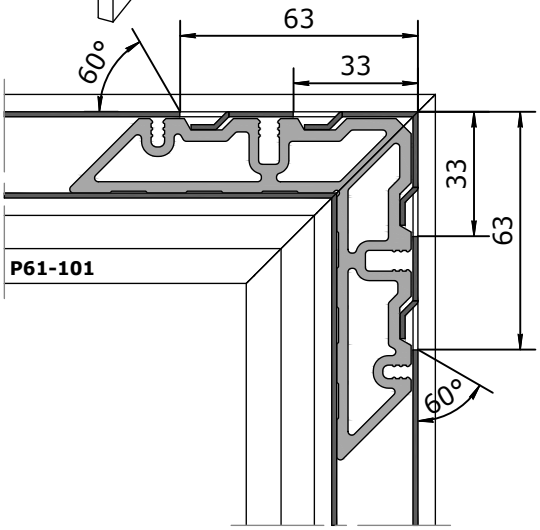

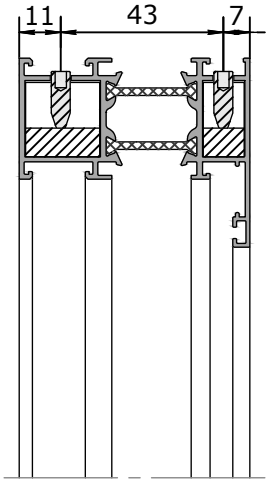

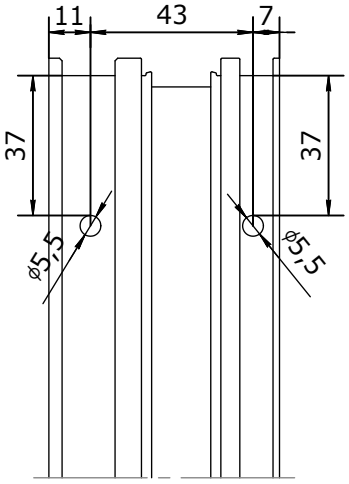

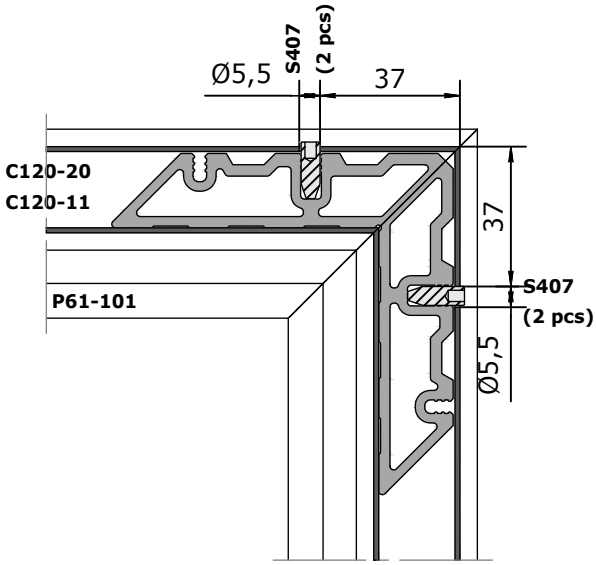

contents
profiles
delivery set
profiles (1:1)
sections
glazing tables
sub-assemblies tables
fitting arrangements
additional solutions
sub-assemblies
fire-resistant structures
connections
equipment and tools

L-joint assembly
Narrow window frame P61-103

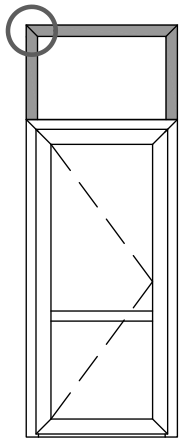

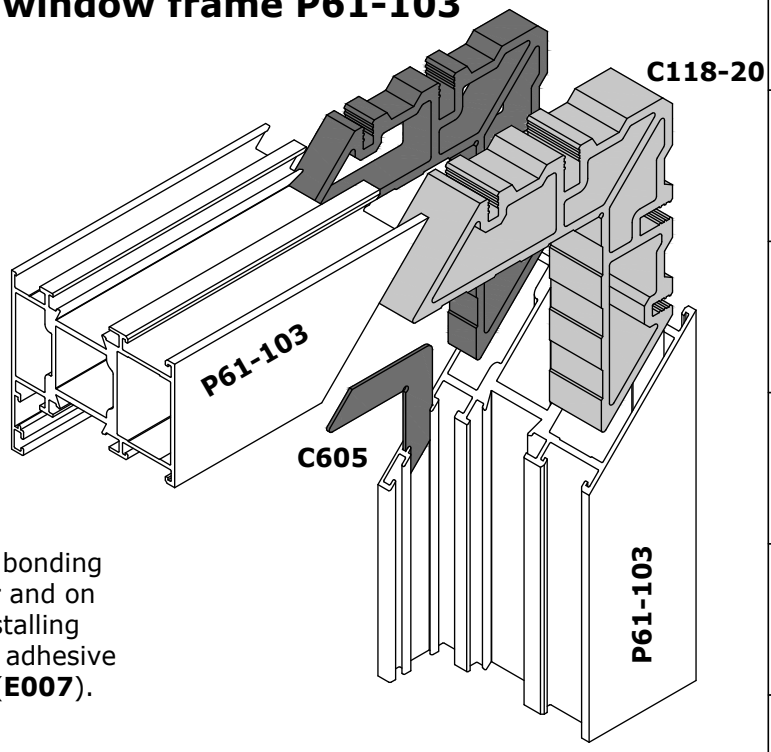

Apply one- or two-component aluminium bonding adhesive (**E006**) into the profile chamber and on the ends of the bonded profiles before installing the embedded parts. Remove any excess adhesive and wipe the joint with a special cleaner (**E007**).

Crimping assembly

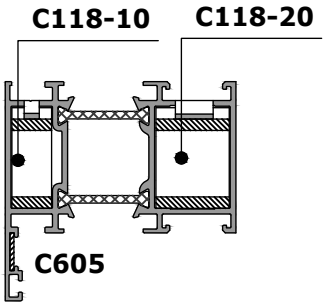

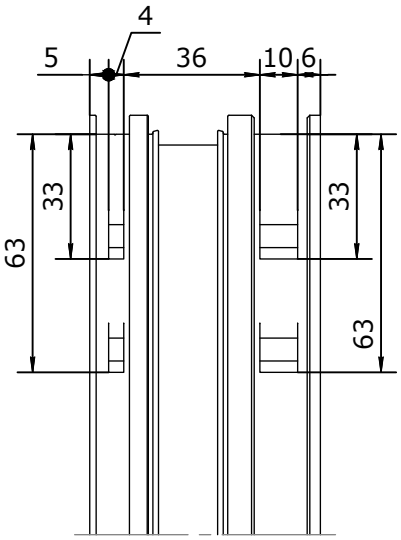

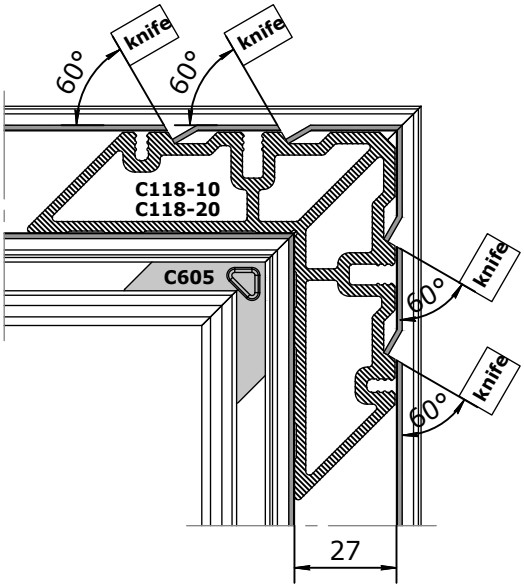

Pin assembly

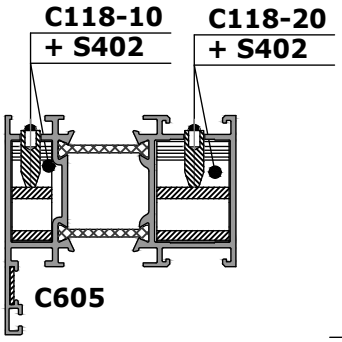

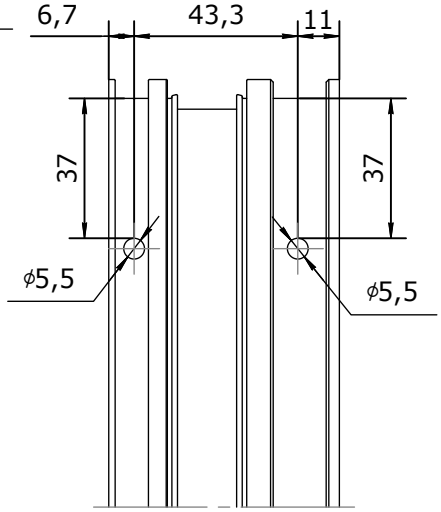

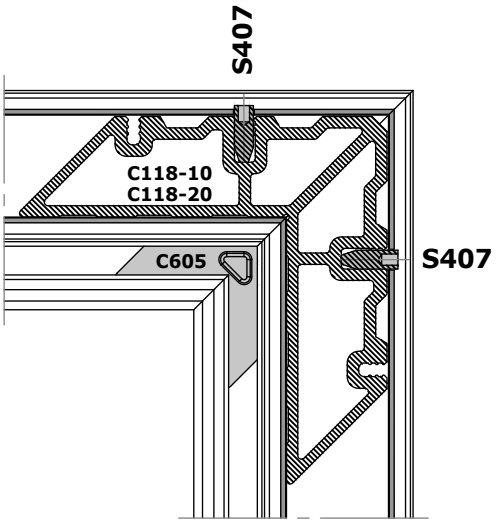

contents
profiles
delivery set
profiles (1:1)
sections
glazing tables
sub-assemblies tables
fitting arrangements
additional solutions
sub-assemblies
fire-resistant structures
connections
equipment and tools

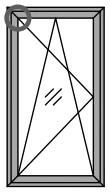

L-joint assembly
Sash P61-201

Apply one- or two-component aluminium bonding adhesive (**E006**) into the profile chamber and on the ends of the bonded profiles before installing the embedded parts. Remove any excess adhesive and wipe the joint with a special cleaner (**E007**).

The embedded part C121-06 acts as a levelling angle and can only be fixed with adhesive. The rest of the embedding parts require additional fixation (apart from glue) by crimping or pinning.

As an alternative to the internal levelling angle, the external levelling angle C605 can be installed, additionally secured with 4 x 10 rivets and adhesive.

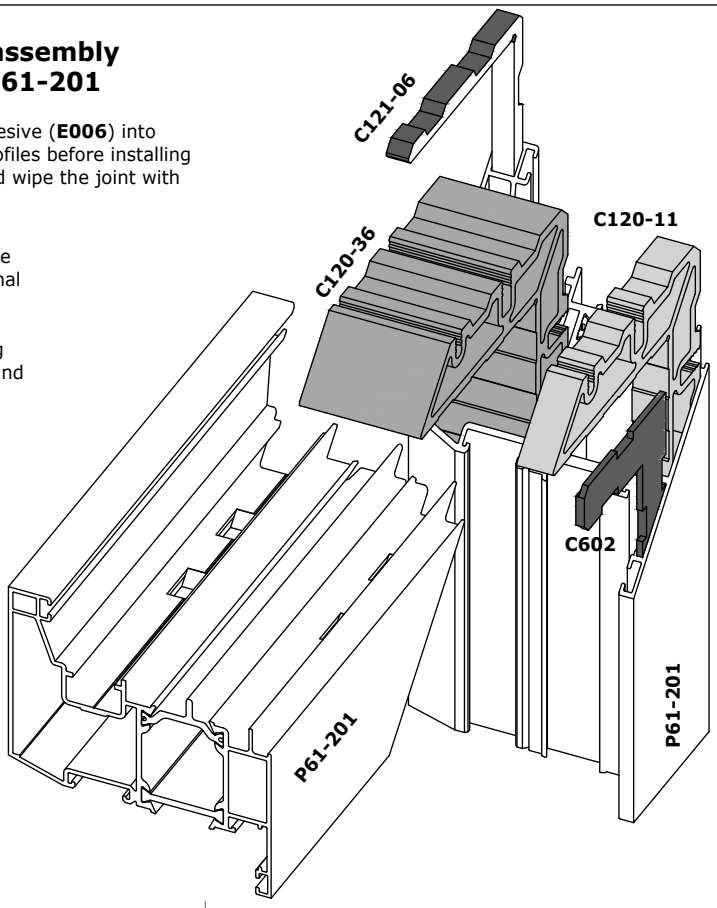

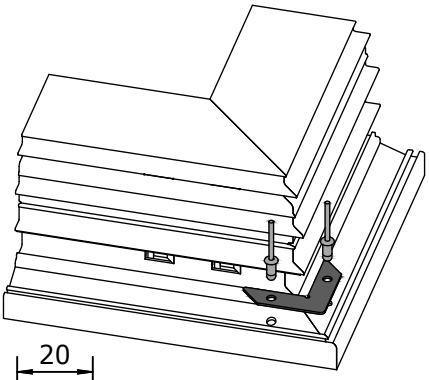

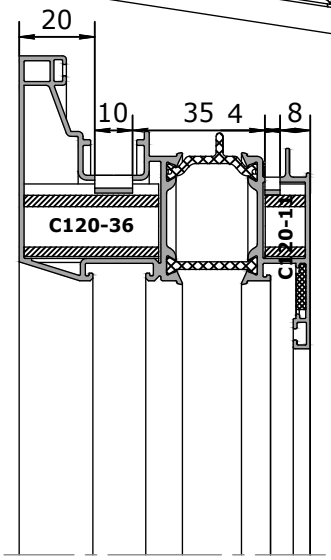

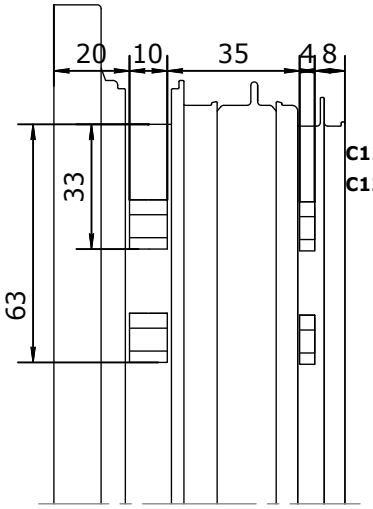

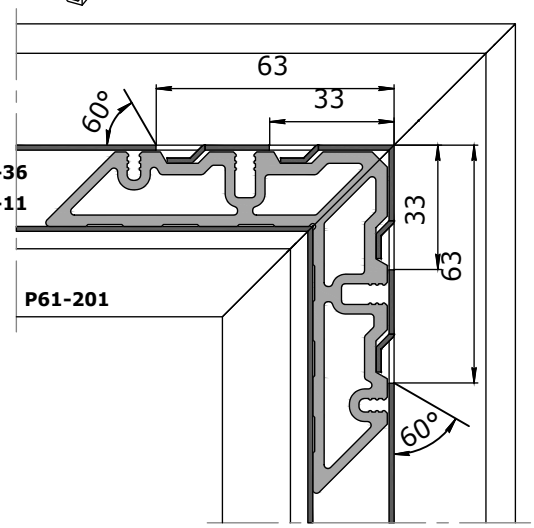

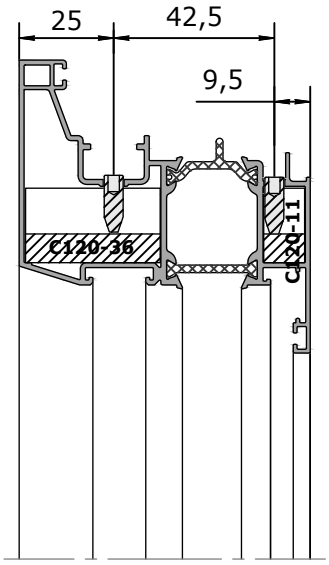

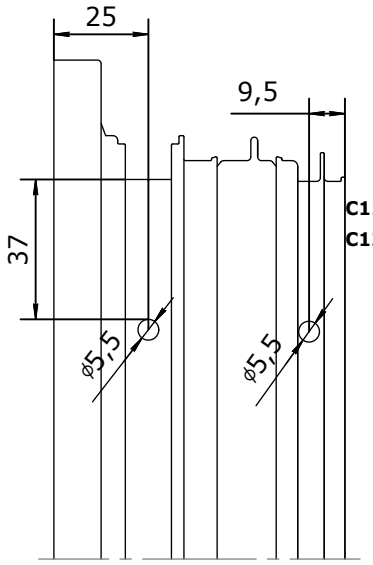

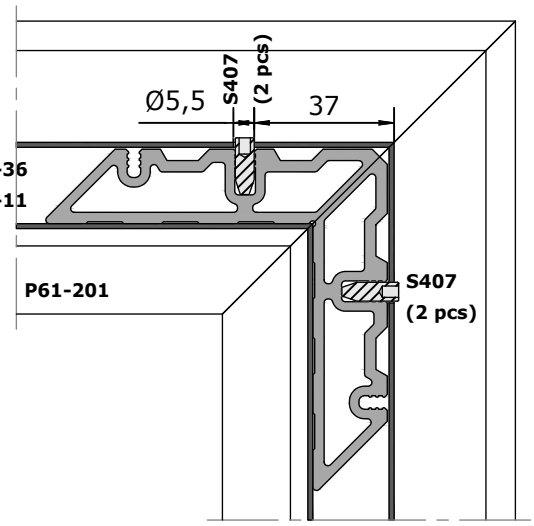

contents
profiles
delivery set
profiles (1:1)
sections
glazing tables
sub-assemblies tables
fitting arrangements
additional solutions
sub-assemblies
fire-resistant structures
connections
equipment and tools

L-joint assembly — sash P61-202

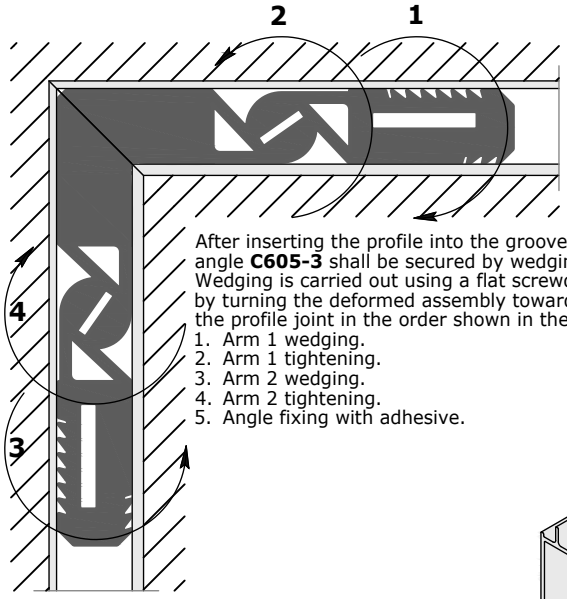

After inserting the profile into the groove, the levelling angle **C605-3** shall be secured by wedging it in place. Wedging is carried out using a flat screwdriver in 4 steps by turning the deformed assembly towards the corner of the profile joint in the order shown in the diagram:

1. Arm 1 wedging.
2. Arm 1 tightening.
3. Arm 2 wedging.
4. Arm 2 tightening.
5. Angle fixing with adhesive.

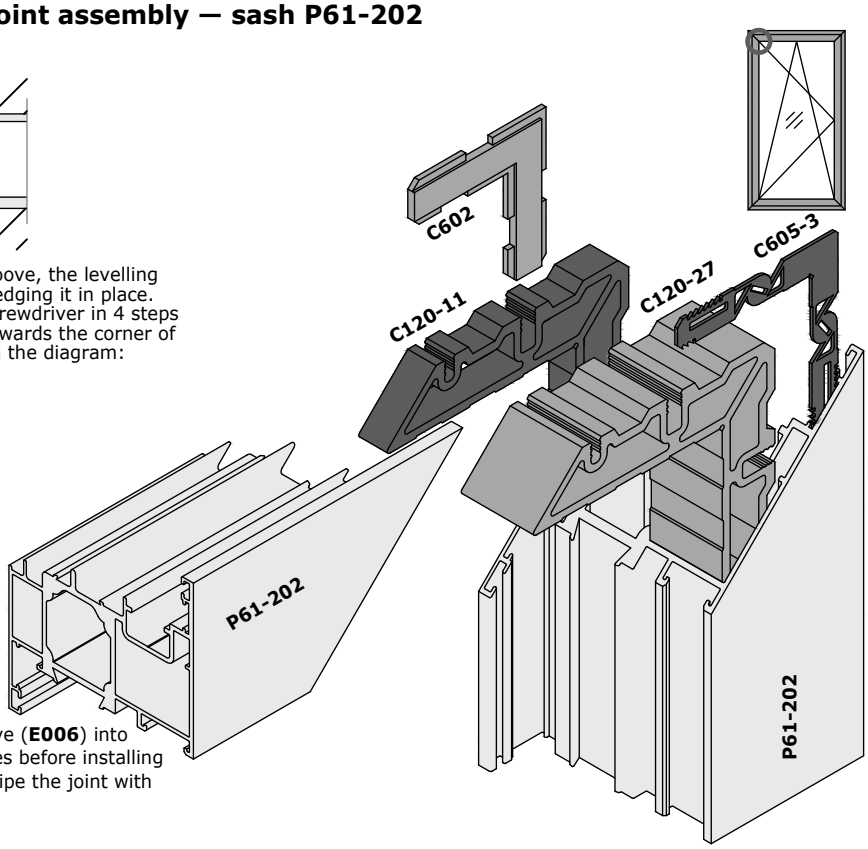

Apply one- or two-component aluminium bonding adhesive (**E006**) into the profile chamber and on the ends of the bonded profiles before installing the embedded parts. Remove any excess adhesive and wipe the joint with a special cleaner (**E007**).

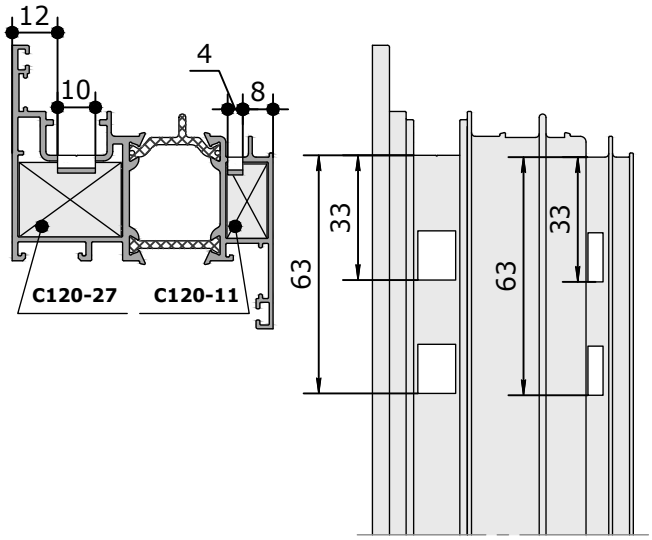

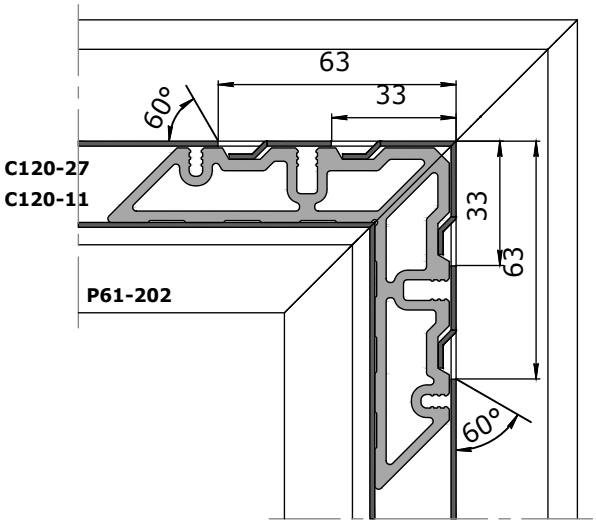

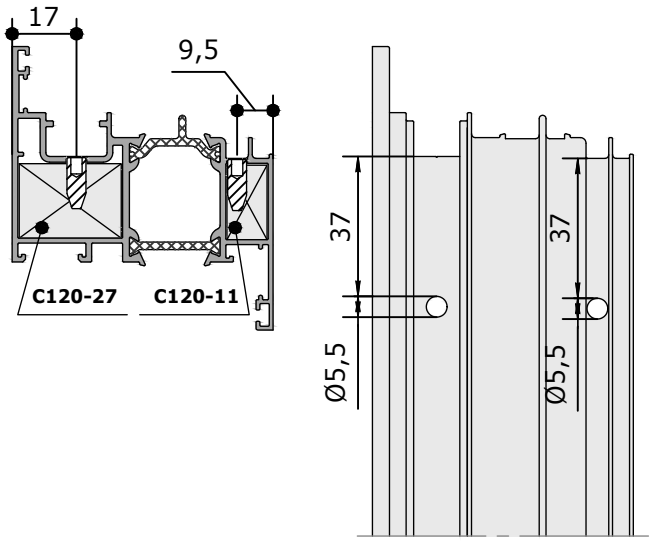

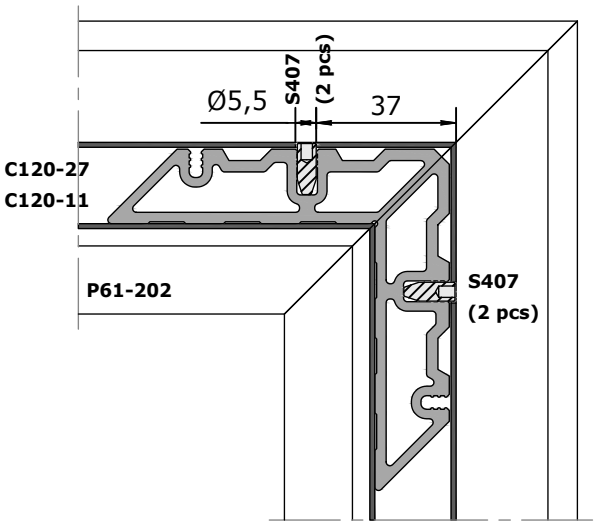

contents
profiles
delivery set
profiles (1:1)
sections
glazing tables
sub-assemblies tables
fitting arrangements
additional solutions
sub-assemblies
fire-resistant structures
connections
equipment and tools

T-joint assembly: installation of impost P61-401 into sash P61-201 (simplified milling)

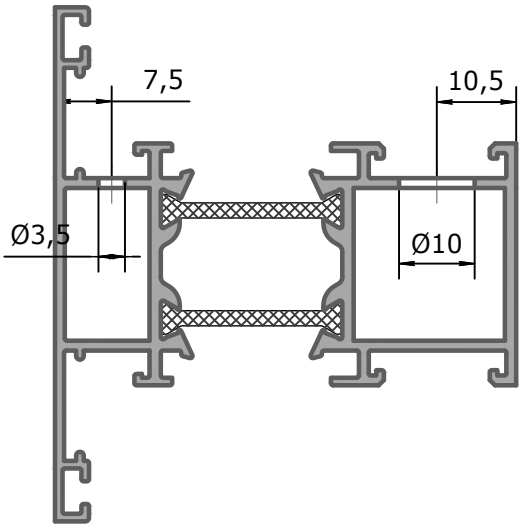

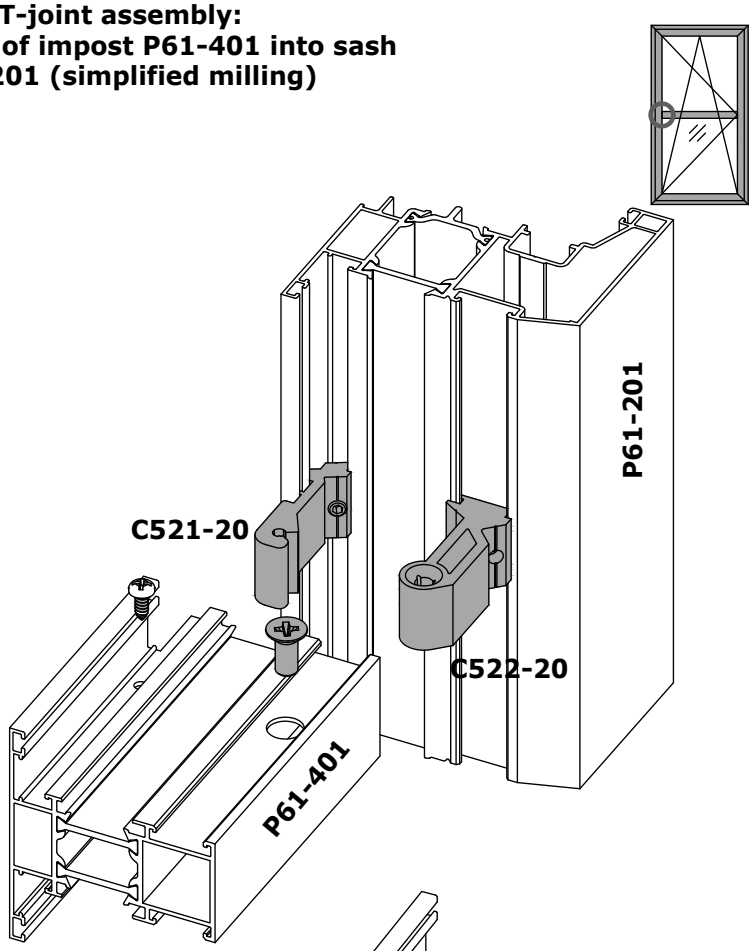

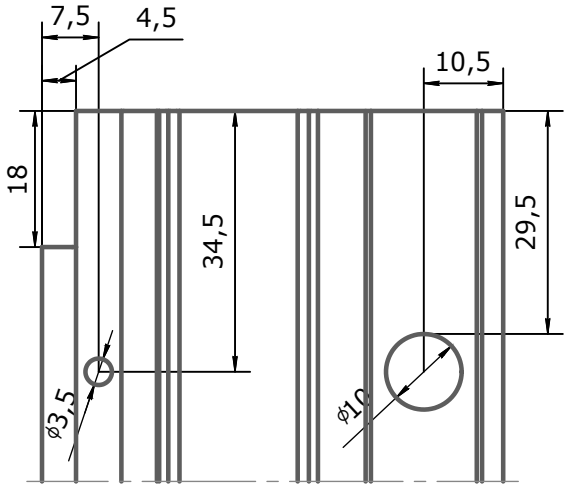

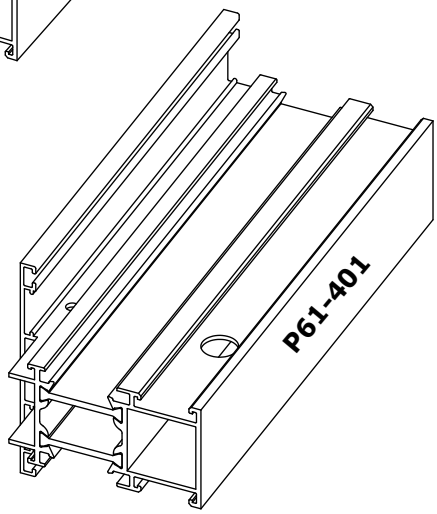

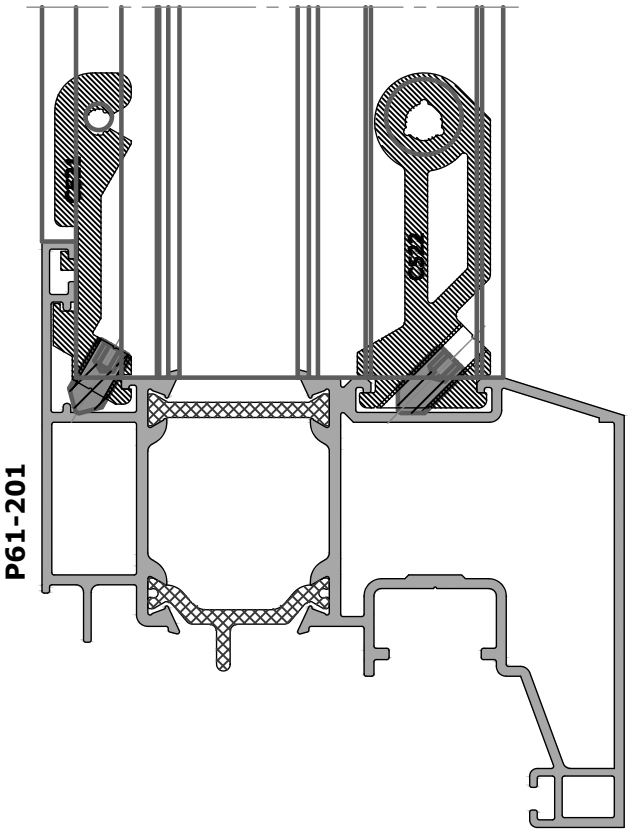

Screw torque in the embedded part

C552-20:

screw M6 with countersunk head	min. — 4.5 N/m
	max. — 6 N/m
screw M5	min. — 2 N/m
	max. — 2.5 N/m

C551-20:

screw M5	min. — 2 N/m
	max. — 2.5 N/m

Apply one- or two-component aluminium bonding adhesive (**E006**) into the profile chamber and on the ends of the bonded profiles before installing the embedded parts. Remove any excess adhesive and wipe the joint with a special cleaner (**E007**).

To prevent moisture leakage along the vertical profiles, seal the impost joints with a neutral sealant after installation. Only simplified milling is used when machining the imposts to fit into the sash.

contents
profiles
delivery set
profiles (1:1)
sections
glazing tables
sub-assemblies tables
fitting arrangements
additional solutions
sub-assemblies
fire-resistant structures
connections
equipment and tools

T-joint assembly: installation of impost P61-403-69 into sash P61-202 (simplified milling)

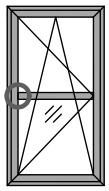

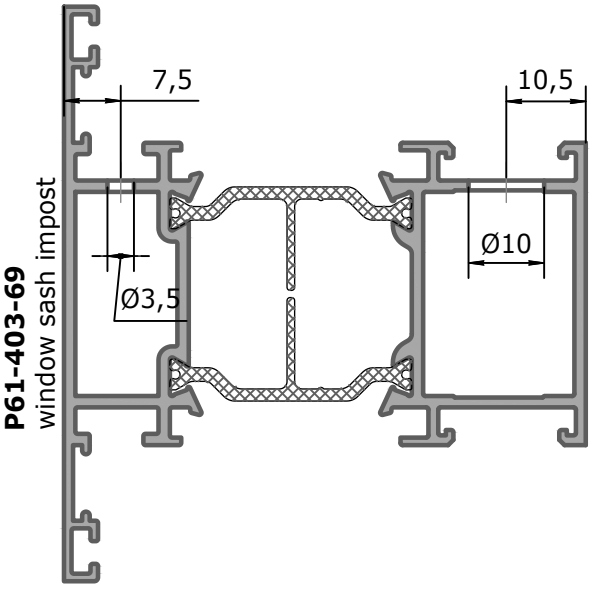

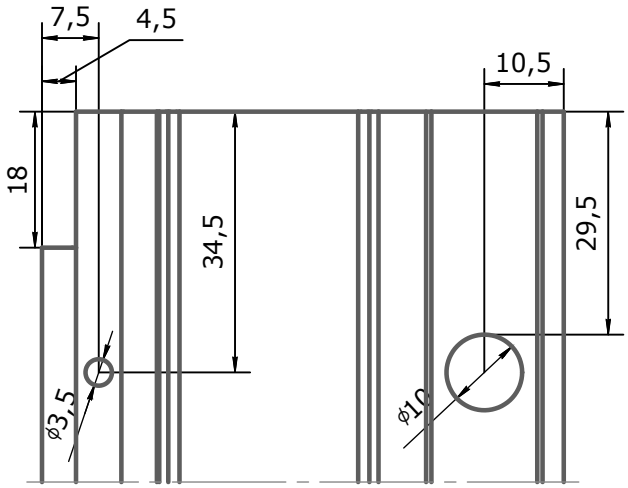

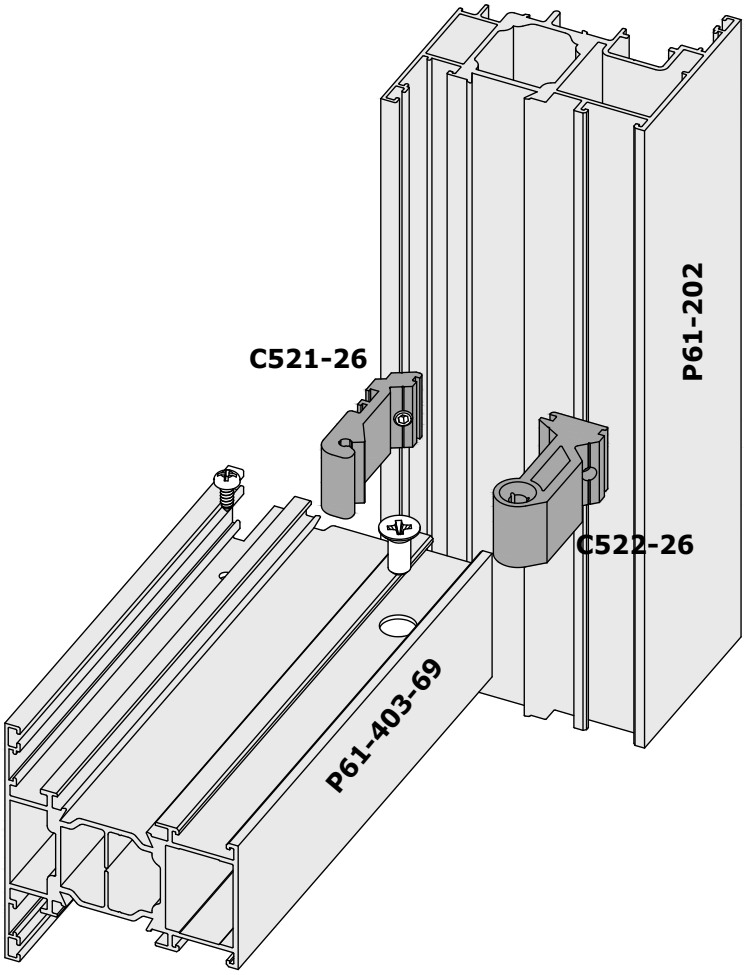

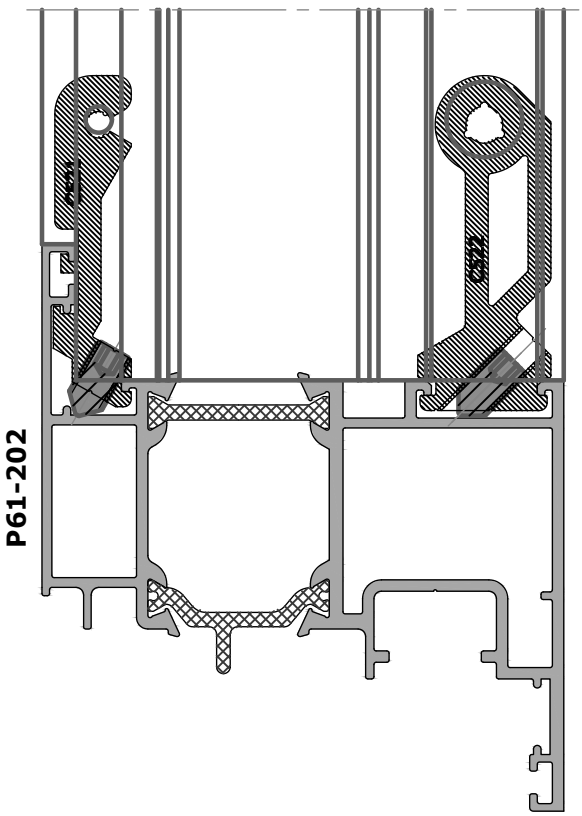

Screw torque in the embedded part

C552-20:

screw M6 with countersunk head	min. — 4.5 N/m
	max. — 6 N/m
screw M5	min. — 2 N/m
	max. — 2.5 N/m

C551-20:

screw M5	min. — 2 N/m
	max. — 2.5 N/m

Apply one- or two-component aluminium bonding adhesive (**E006**) into the profile chamber and on the ends of the bonded profiles before installing the embedded parts. Remove any excess adhesive and wipe the joint with a special cleaner (**E007**).

To prevent moisture leakage along the vertical profiles, seal the impost joints with a neutral sealant after installation. Only simplified milling is used when machining the imposts to fit into the sash.

contents
profiles
delivery set
profiles (1:1)
sections
glazing tables
sub-assemblies tables
fitting arrangements
additional solutions
sub-assemblies
fire-resistant structures
connections
equipment and tools

T-joint assembly: installation of impost P61-401 into frame P61-101 (Classic "complex" milling)

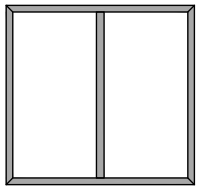

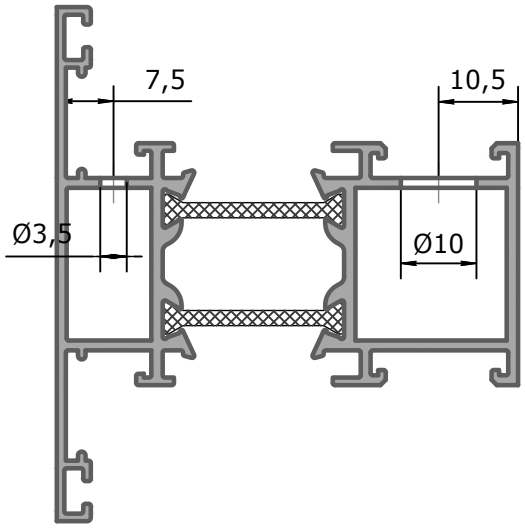

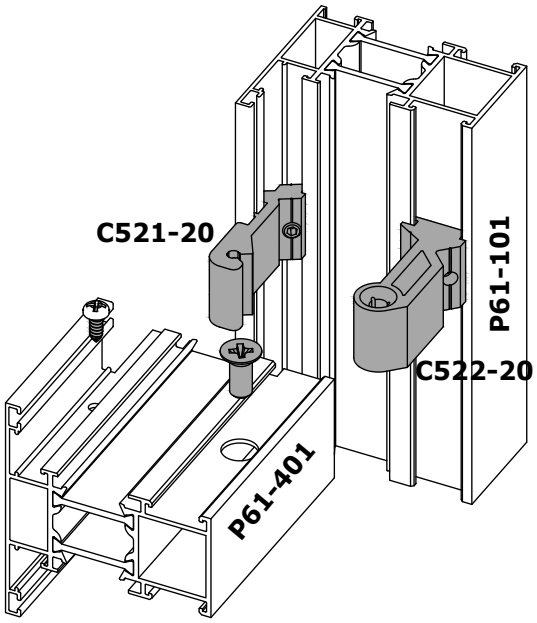

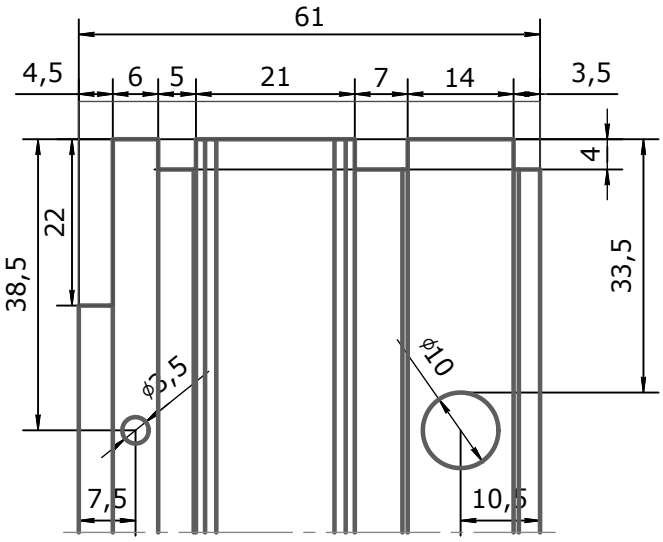

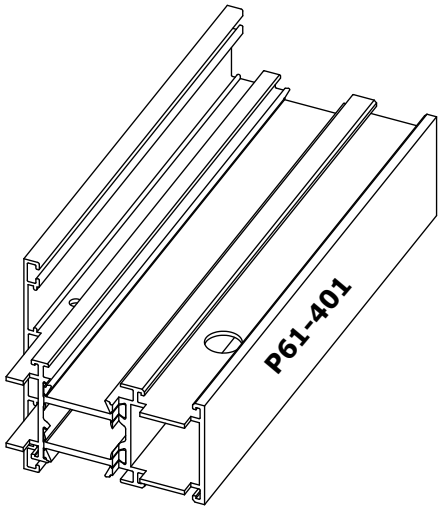

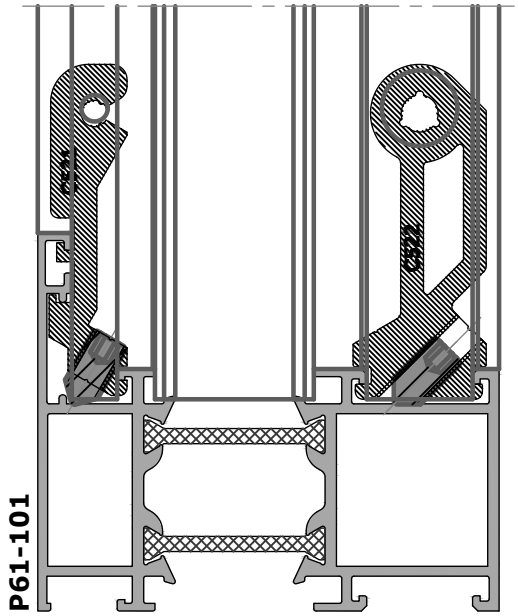

Screw torque in the embedded part

C552-20:

screw M6 with countersunk head	min. — 4.5 N/m max. — 6 N/m
screw M5	min. — 2 N/m max. — 2.5 N/m

C551-20:

screw M5	min. — 2 N/m max. — 2.5 N/m

Apply one- or two-component aluminium bonding adhesive (**E006**) into the profile chamber and on the ends of the bonded profiles before installing the embedded parts. Remove any excess adhesive and wipe the joint with a special cleaner (**E007**).

To prevent moisture leakage along the vertical profiles, seal the impost joints with a neutral sealant after installation. Classic (complex) milling is preferred when machining the imposts.

contents
profiles
delivery set
profiles (1:1)
sections
glazing tables
sub-assemblies tables
fitting arrangements
additional solutions
sub-assemblies
fire-resistant structures
connections
equipment and tools

T-joint assembly: Mating the additional frame to the door opening

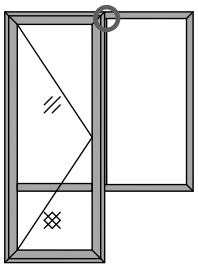

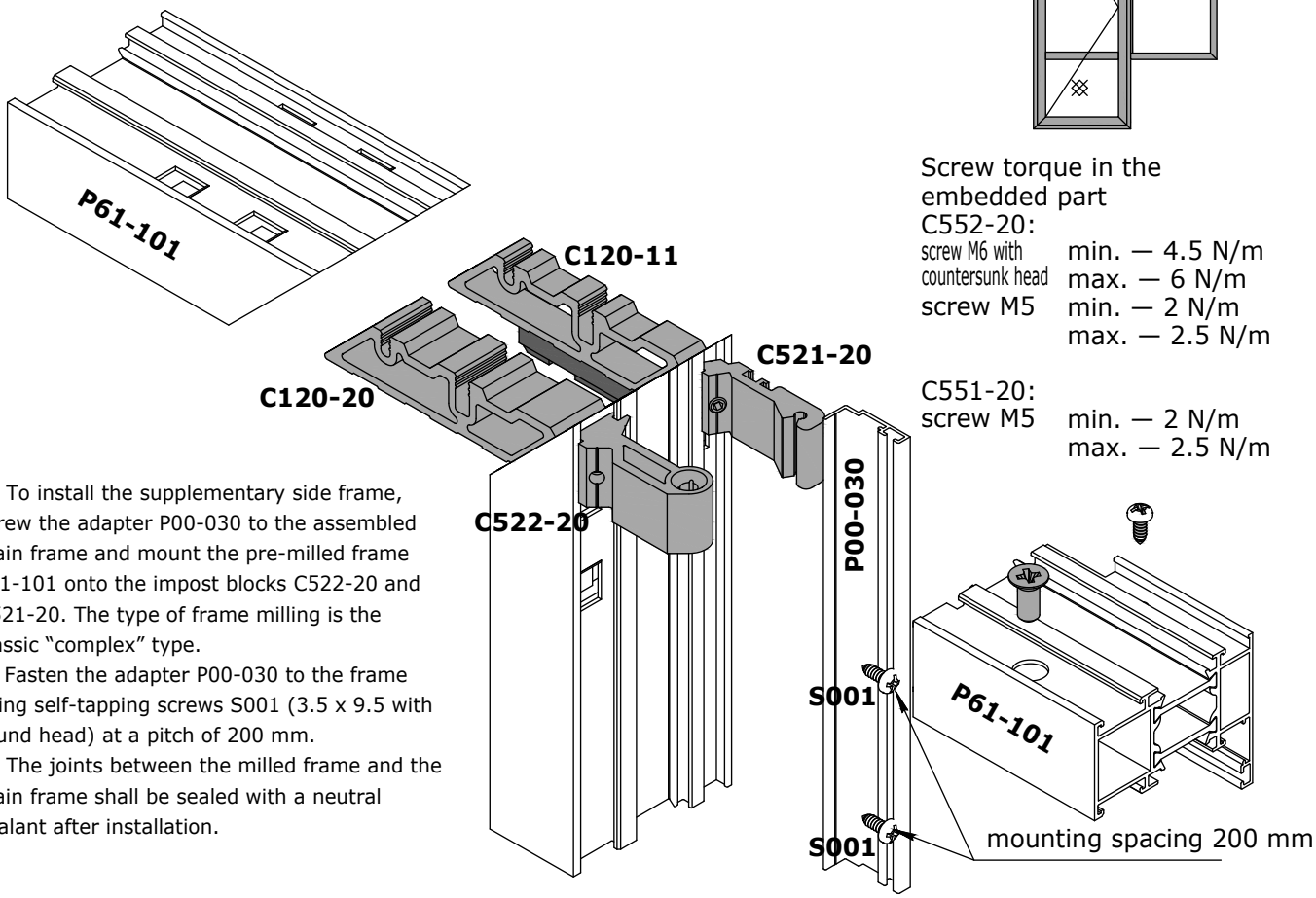

Screw torque in the embedded part
C552-20:
screw M6 with countersunk head min. — 4.5 N/m
max. — 6 N/m
screw M5 min. — 2 N/m
max. — 2.5 N/m

C551-20:
screw M5 min. — 2 N/m
max. — 2.5 N/m

To install the supplementary side frame, screw the adapter P00-030 to the assembled main frame and mount the pre-milled frame P61-101 onto the impost blocks C522-20 and C521-20. The type of frame milling is the classic "complex" type.

Fasten the adapter P00-030 to the frame using self-tapping screws S001 (3.5 x 9.5 with round head) at a pitch of 200 mm.

The joints between the milled frame and the main frame shall be sealed with a neutral sealant after installation.

Apply one- or two-component aluminium bonding adhesive (**E006**) into the profile chamber and on the ends of the bonded profiles before installing the embedded parts. Remove any excess adhesive and wipe the joint with a special cleaner (**E007**).

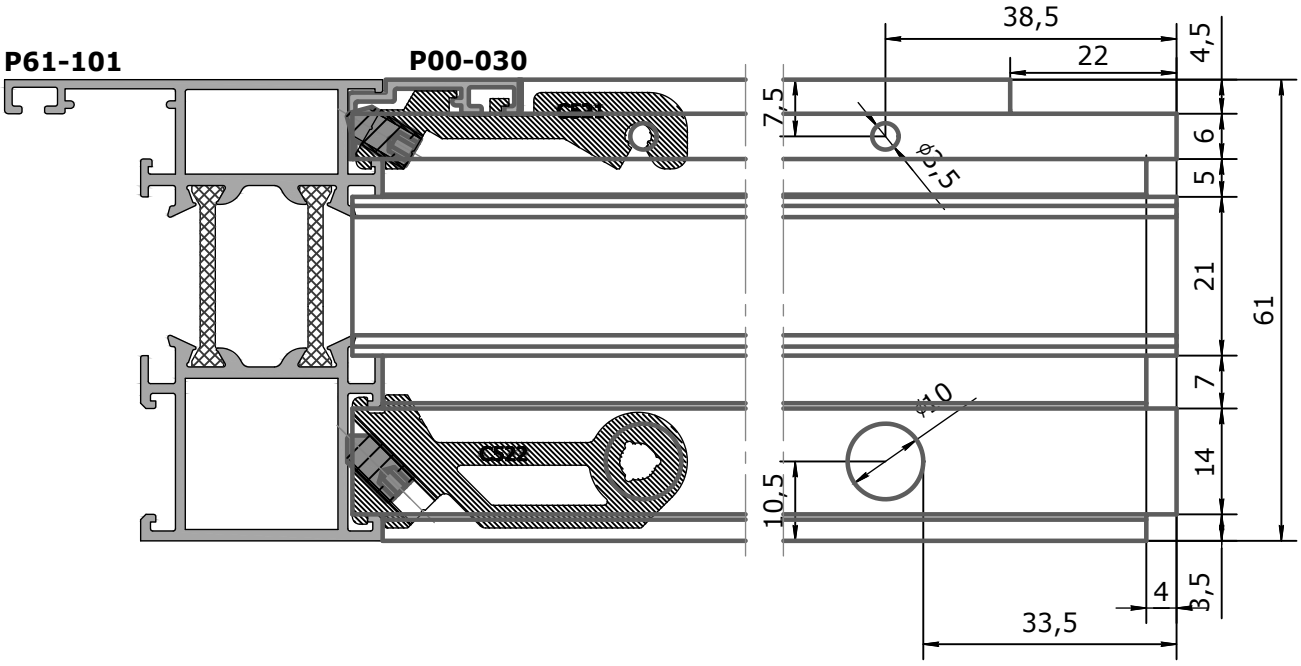

contents
profiles
delivery set
profiles (1:1)
sections
glazing tables
sub-assemblies tables
fitting arrangements
additional solutions
sub-assemblies
fire-resistant structures
connections
equipment and tools

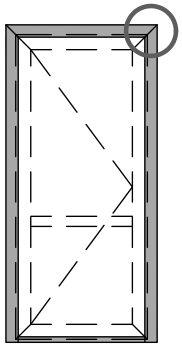

L-joint assembly: Frame P61-171

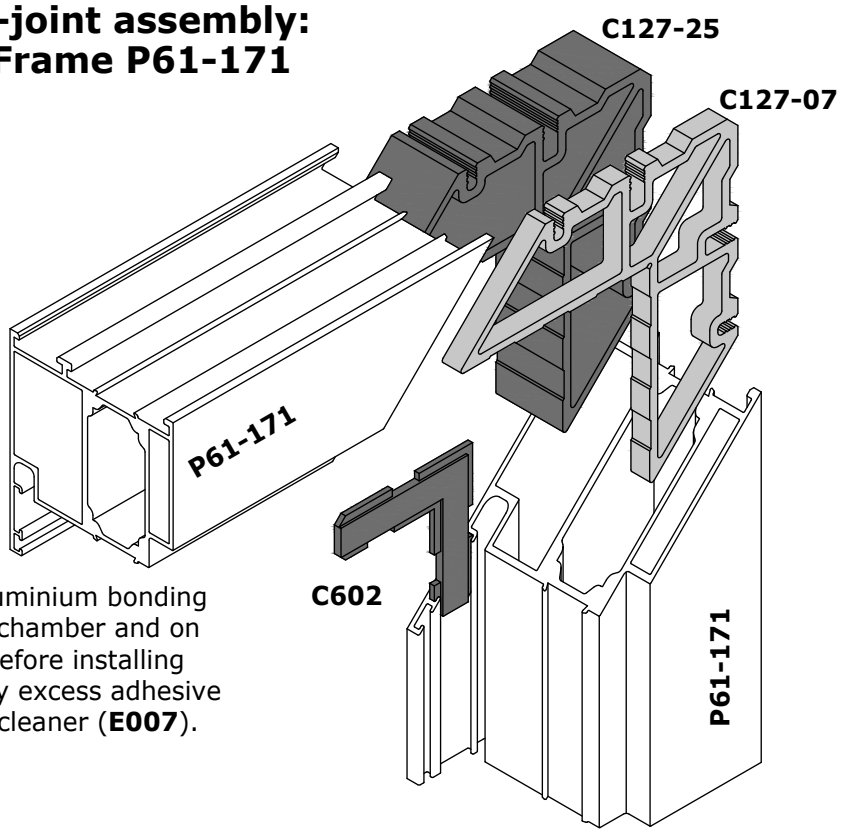

Apply one- or two-component aluminium bonding adhesive (**E006**) into the profile chamber and on the ends of the bonded profiles before installing the embedded parts. Remove any excess adhesive and wipe the joint with a special cleaner (**E007**).

Crimping assembly

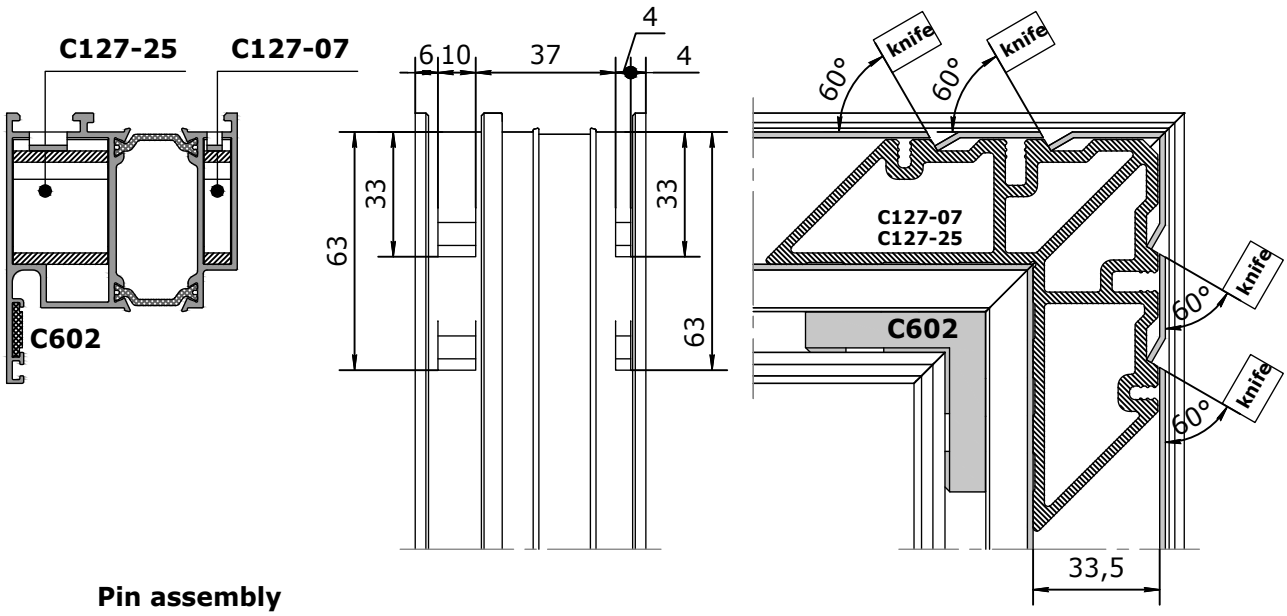

Pin assembly

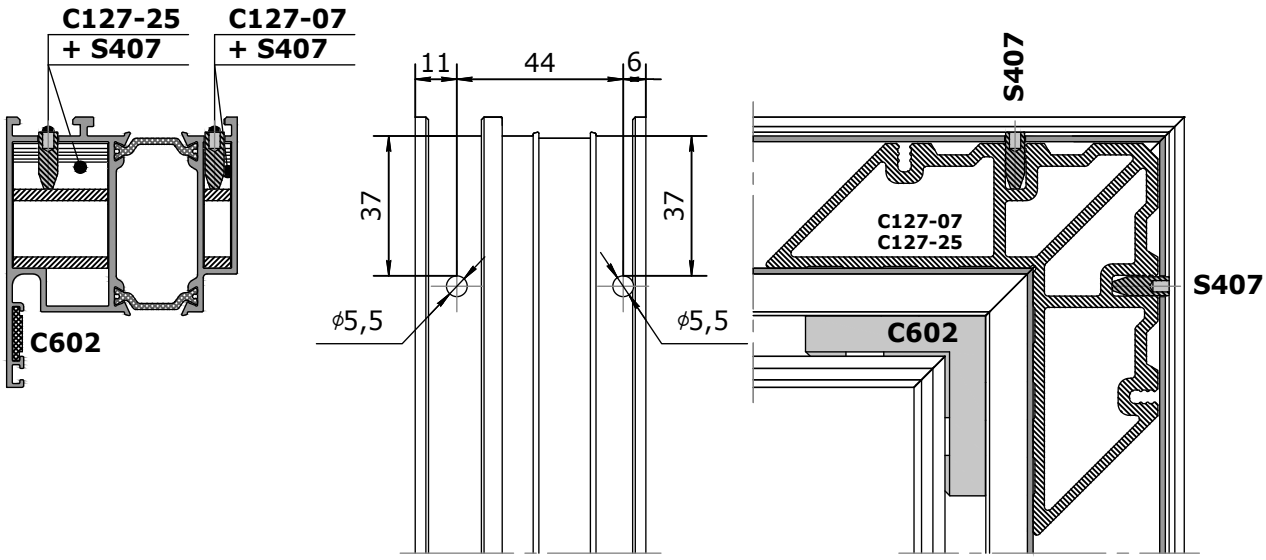

contents
profiles
delivery set
profiles (1:1)
sections
glazing tables
sub-assemblies tables
fitting arrangements
additional solutions
sub-assemblies
fire-resistant structures
connections
equipment and tools

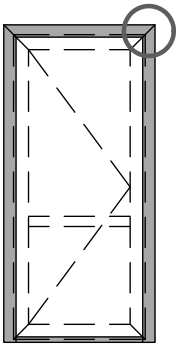

L-joint assembly: Frame P61-173

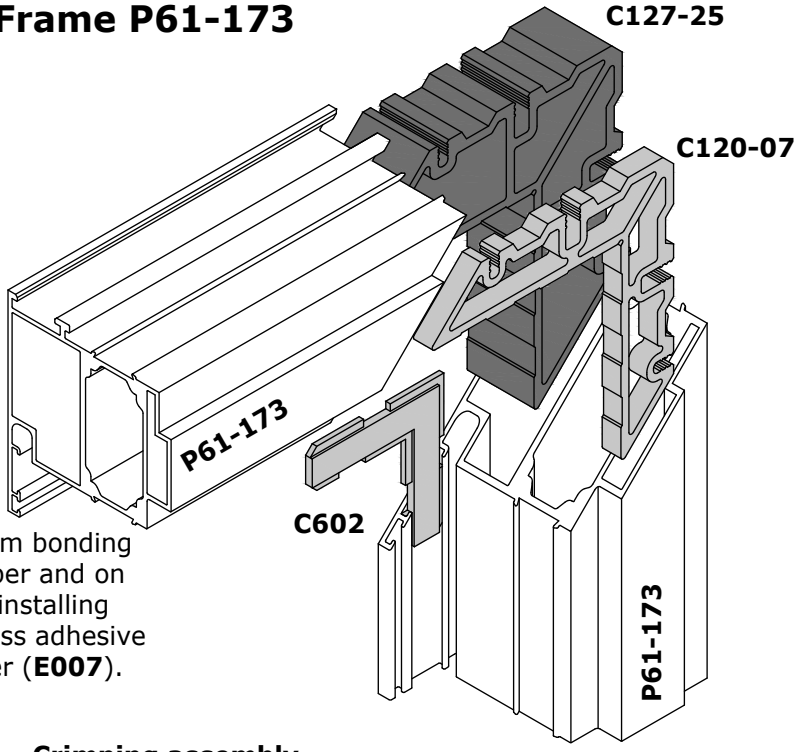

Apply one- or two-component aluminium bonding adhesive (**E006**) into the profile chamber and on the ends of the bonded profiles before installing the embedded parts. Remove any excess adhesive and wipe the joint with a special cleaner (**E007**).

Crimping assembly

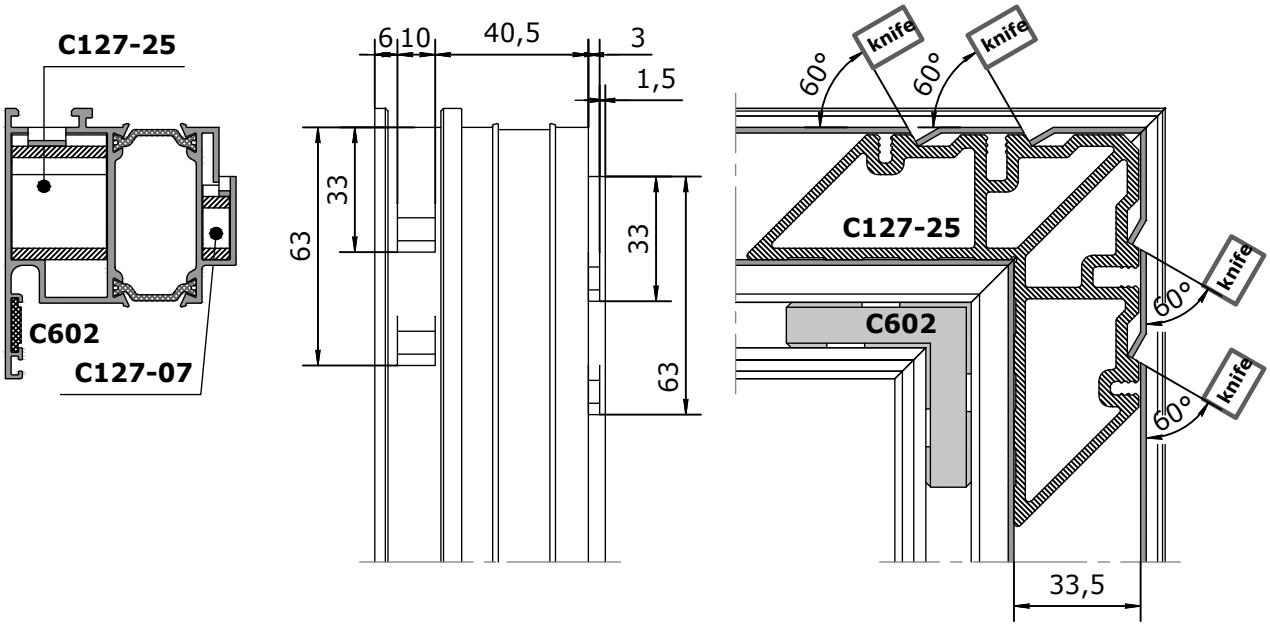

Pin assembly

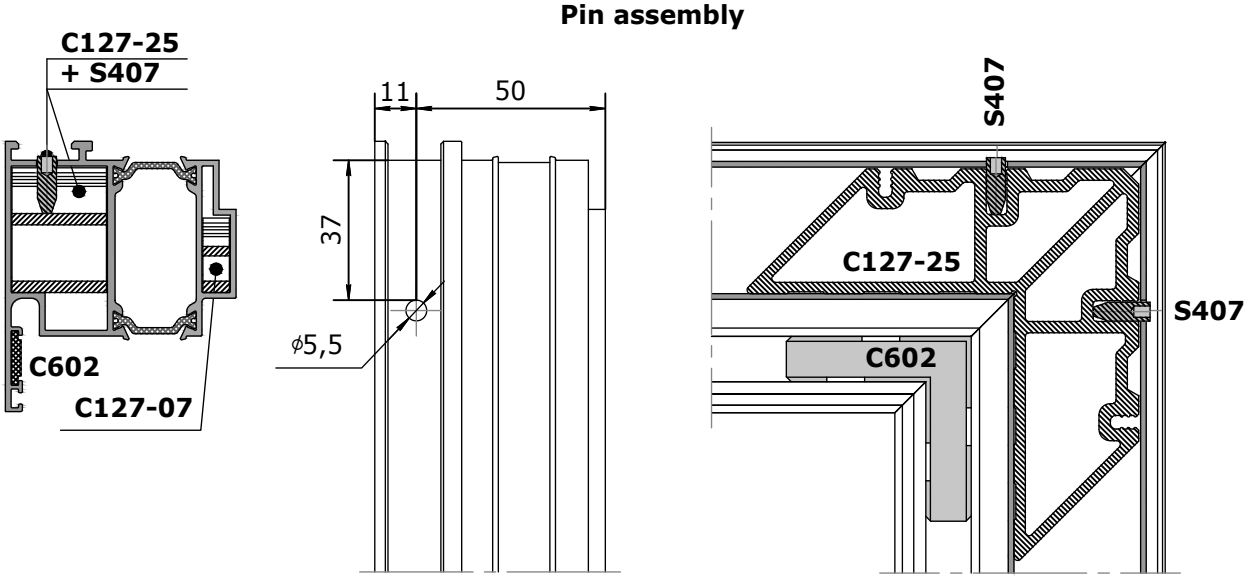

contents
profiles
delivery set
profiles (1:1)
sections
glazing tables
sub-assemblies tables
fitting arrangements
additional solutions
sub-assemblies
fire-resistant structures
connections
equipment and tools

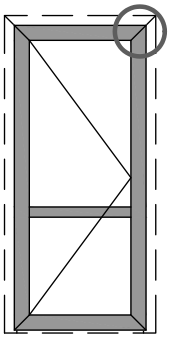

L-joint assembly: T-shaped door leaf P61-271

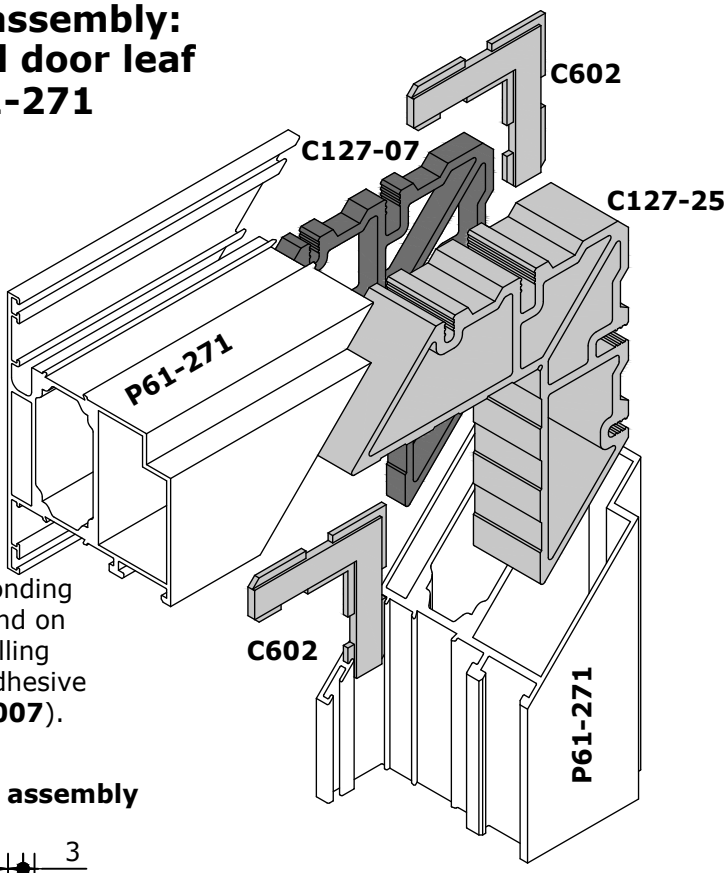

Apply one- or two-component aluminium bonding adhesive (**E006**) into the profile chamber and on the ends of the bonded profiles before installing the embedded parts. Remove any excess adhesive and wipe the joint with a special cleaner (**E007**).

Crimping assembly

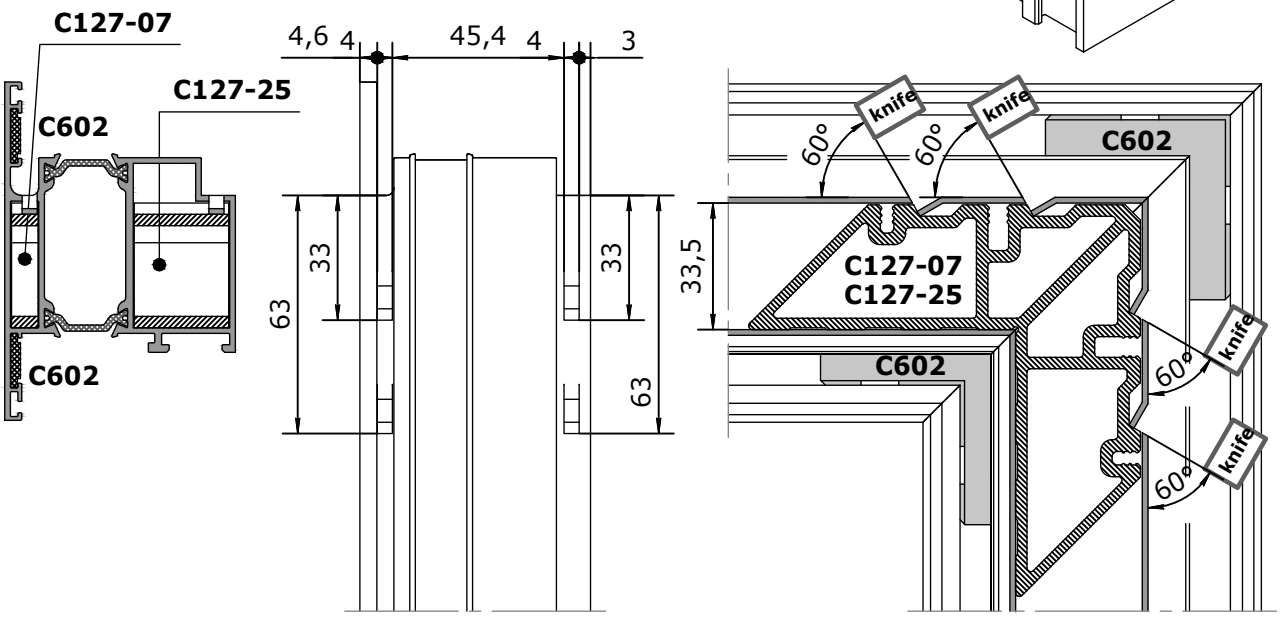

Pin assembly

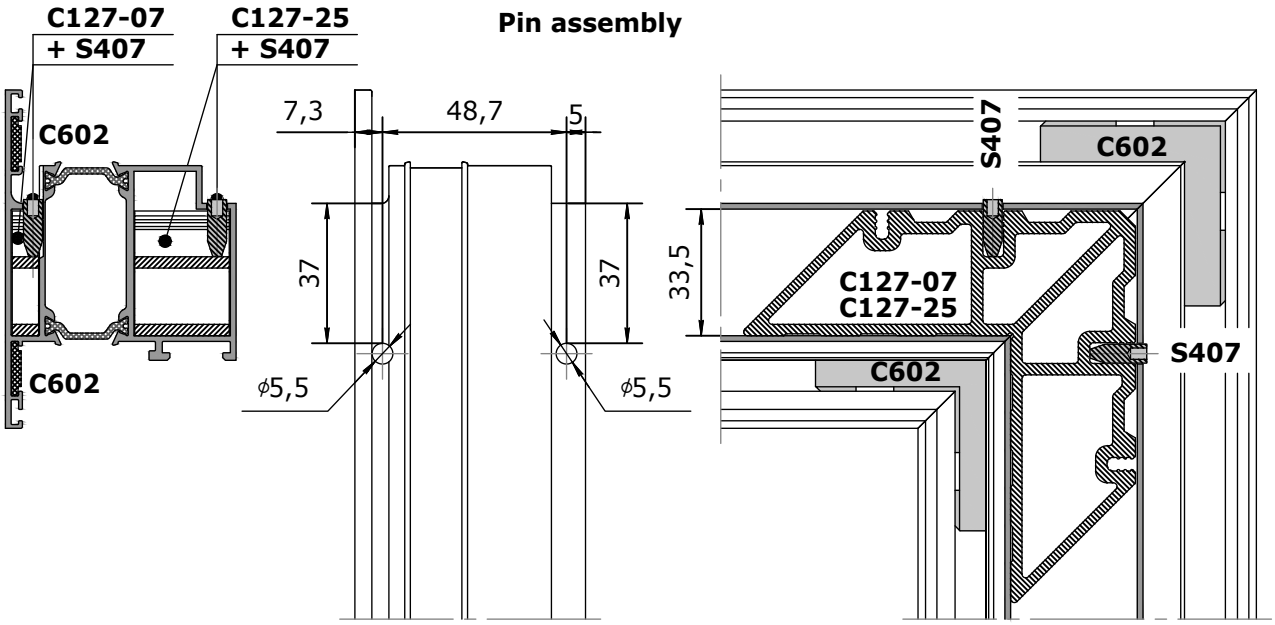

contents
profiles
delivery set
profiles (1:1)
sections
glazing tables
sub-assemblies tables
fitting arrangements
additional solutions
sub-assemblies
fire-resistant structures
connections
equipment and tools

L-joint assembly: Z-shaped door leaf P61-272

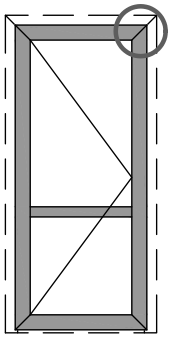

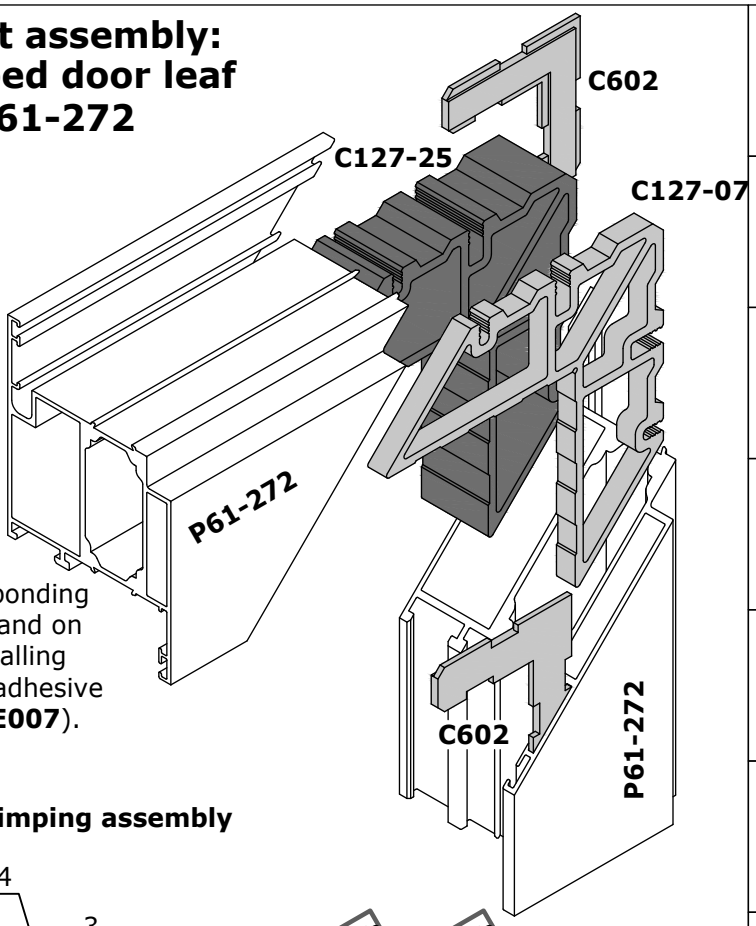

Apply one- or two-component aluminium bonding adhesive (**E006**) into the profile chamber and on the ends of the bonded profiles before installing the embedded parts. Remove any excess adhesive and wipe the joint with a special cleaner (**E007**).

Crimping assembly

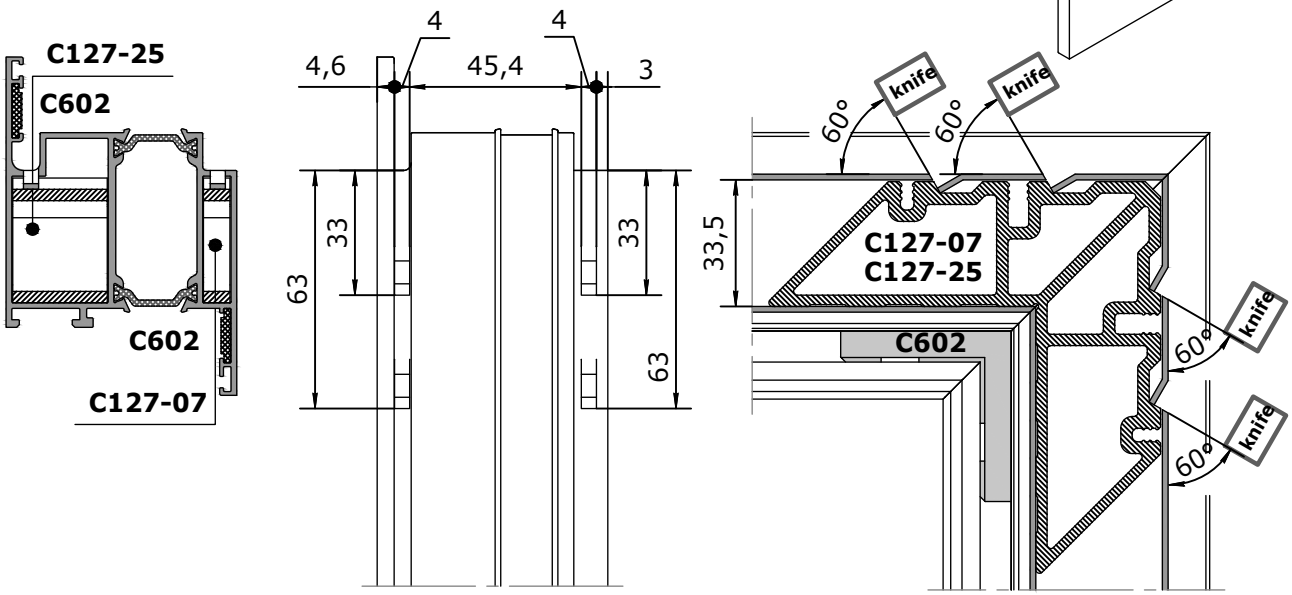

Pin assembly

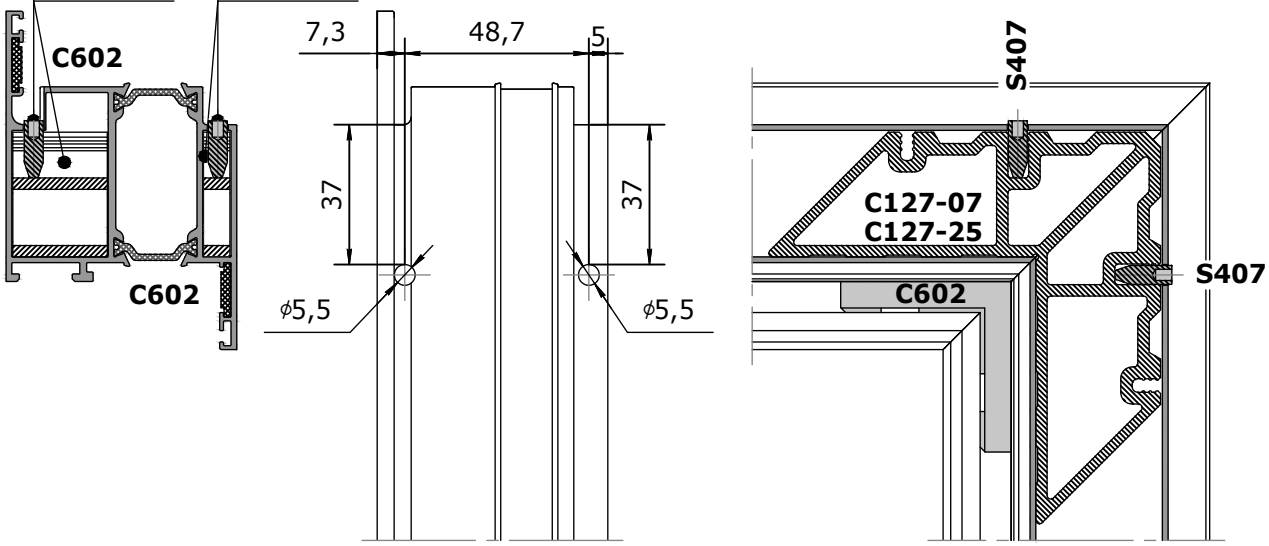

contents
profiles
delivery set
profiles (1:1)
sections
glazing tables
sub-assemblies tables
fitting arrangements
additional solutions
sub-assemblies
fire-resistant structures
connections
equipment and tools

L-joint assembly: Mating the sashes P61-271 and P61-272

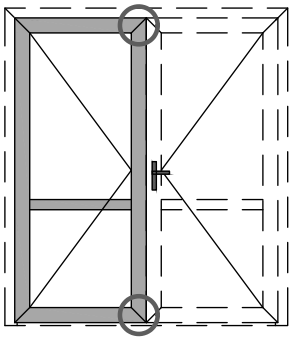

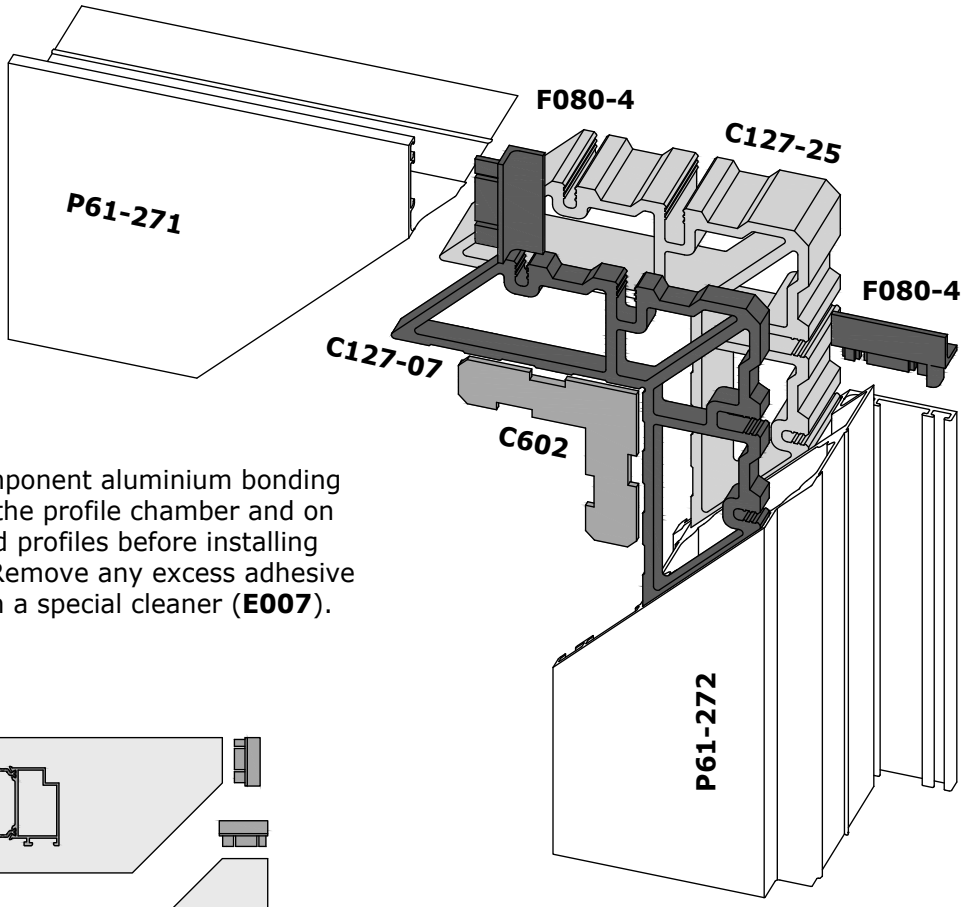

Apply one- or two-component aluminium bonding adhesive (**E006**) into the profile chamber and on the ends of the bonded profiles before installing the embedded parts. Remove any excess adhesive and wipe the joint with a special cleaner (**E007**).

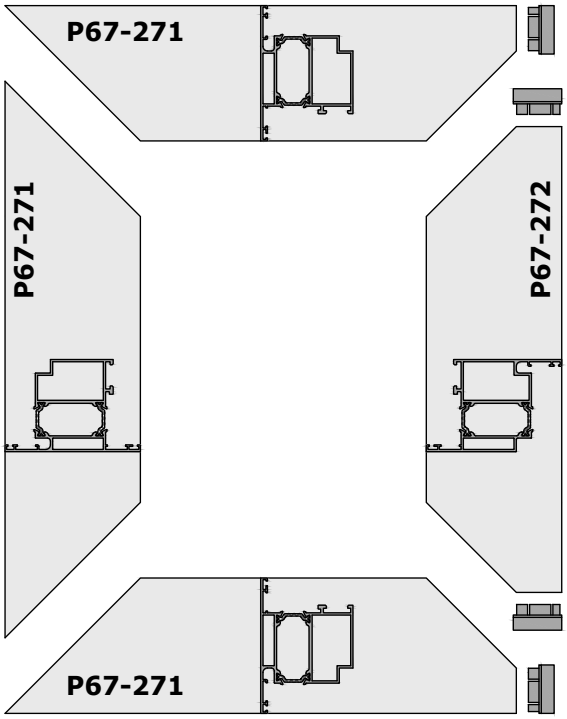

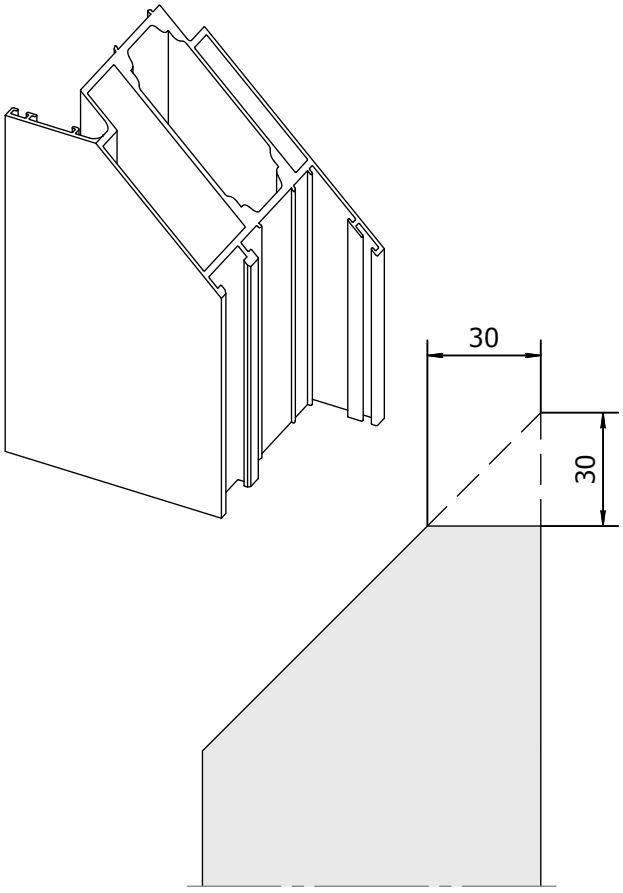

F080-4
Passive sash caps (pair)

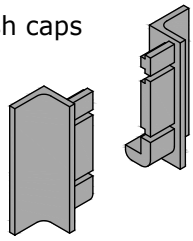

— Additionally secure the caps F080-4 with adhesive

contents
profiles
delivery set
profiles (1:1)
sections
glazing tables
sub-assemblies tables
fitting arrangements
additional solutions
sub-assemblies
fire-resistant structures
connections
equipment and tools

Sill mounting assembly

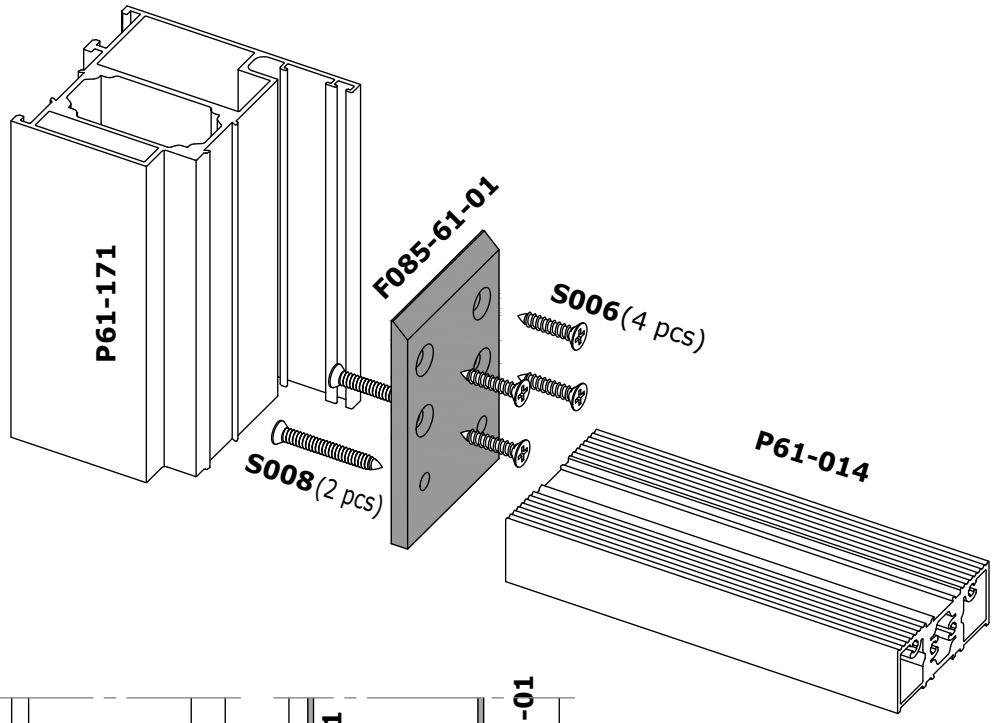

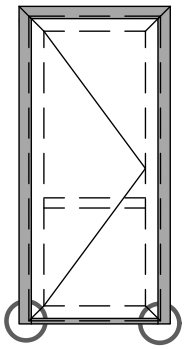

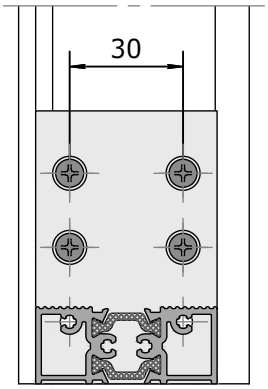

P61-014

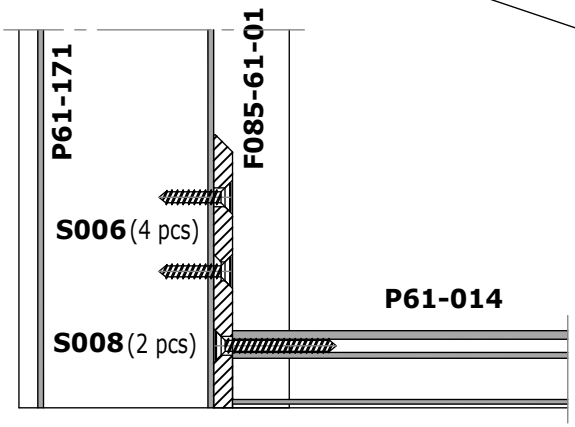

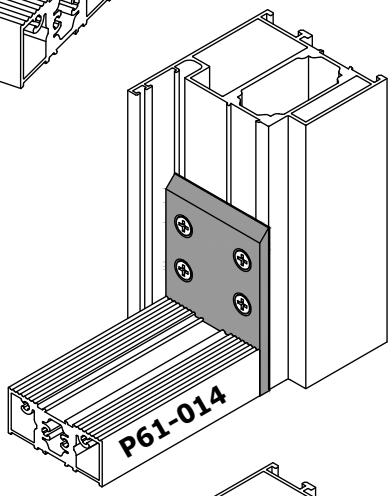

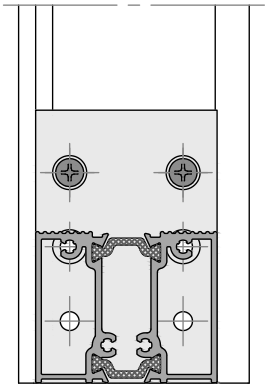

P61-014-2

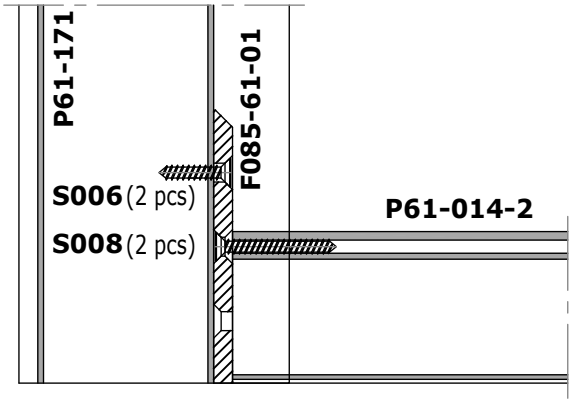

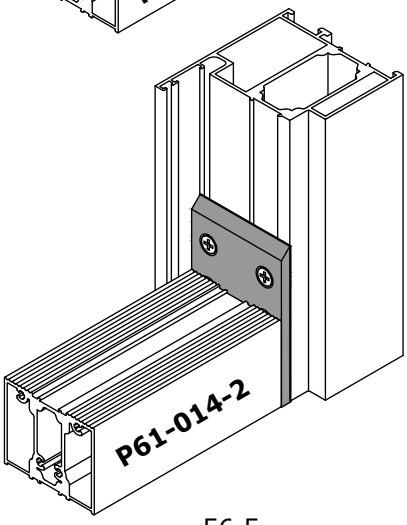

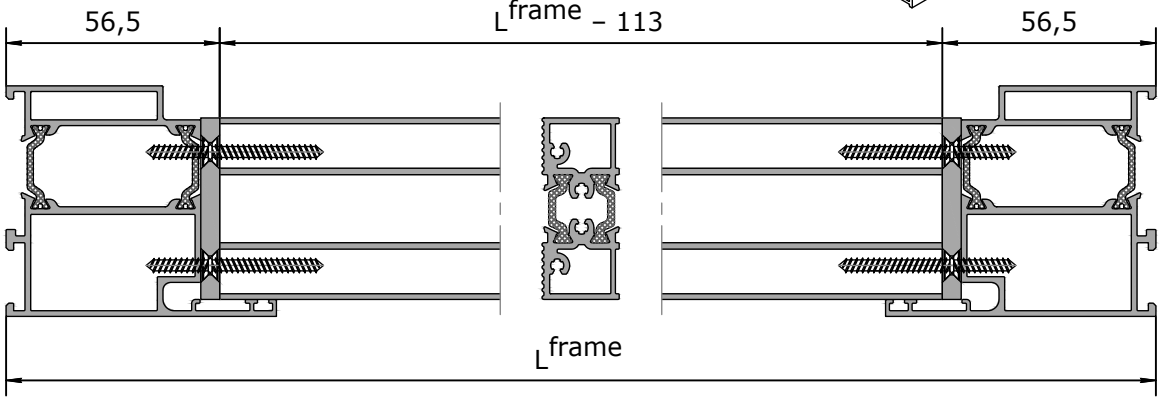

contents
profiles
delivery set
profiles (1:1)
sections
glazing tables
sub-assemblies tables
fitting arrangements
additional solutions
sub-assemblies
fire-resistant structures
connections
equipment and tools

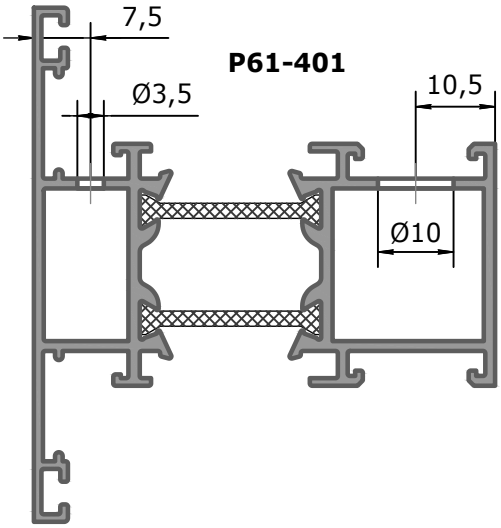

T-joint assembly:
installation of impost P61-401

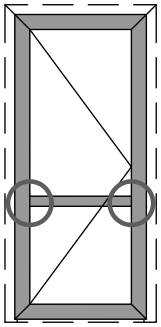

Screw torque in the embedded part
C552-26:

screw M6 with countersunk head	min. — 4.5 N/m
	max. — 6 N/m
screw M5	min. — 2 N/m
	max. — 2.5 N/m

C558-26

screw M5	min. — 2 N/m
	max. — 2.5 N/m

P61-401

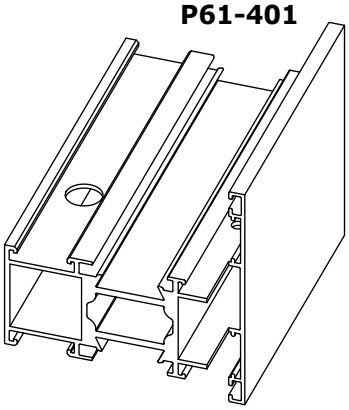

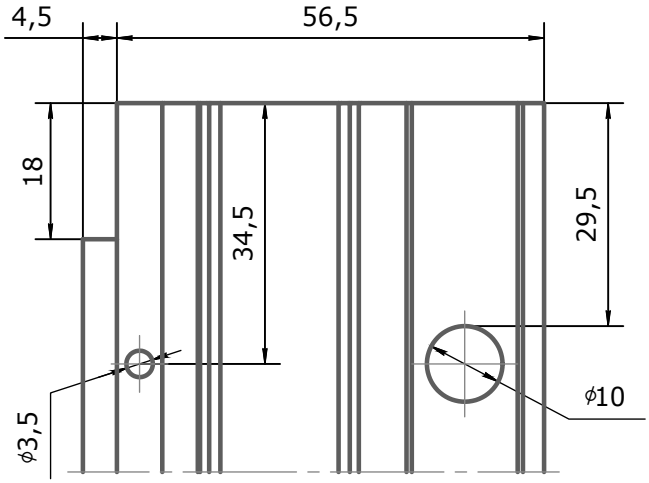

Apply one- or two-component aluminium bonding adhesive (**E006**) into the profile chamber and on the ends of the bonded profiles before installing the embedded parts. Remove any excess adhesive and wipe the joint with a special cleaner (**E007**).

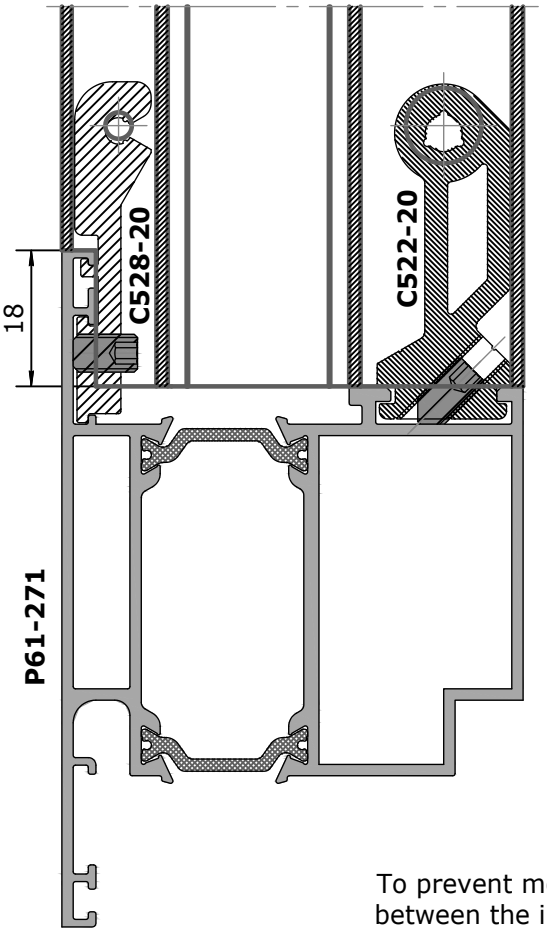

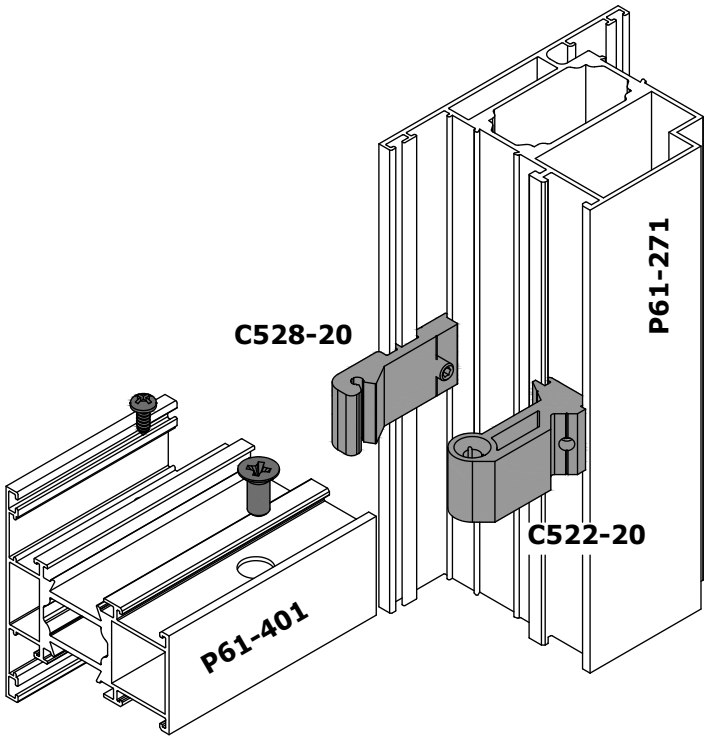

To prevent moisture leakage along the mullions, seal the joints between the imposts and the sash with a neutral sealant.

contents
profiles
delivery set
profiles (1:1)
sections
glazing tables
sub-assemblies tables
fitting arrangements
additional solutions
sub-assemblies
fire-resistant structures
connections
equipment and tools

T-joint assembly: installation of expander impost P61-404

Apply one- or two-component aluminium bonding adhesive (**E006**) into the profile chamber and on the ends of the bonded profiles before installing the embedded parts. Remove any excess adhesive and wipe the joint with a special cleaner (**E007**).

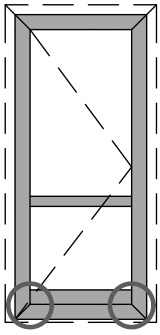

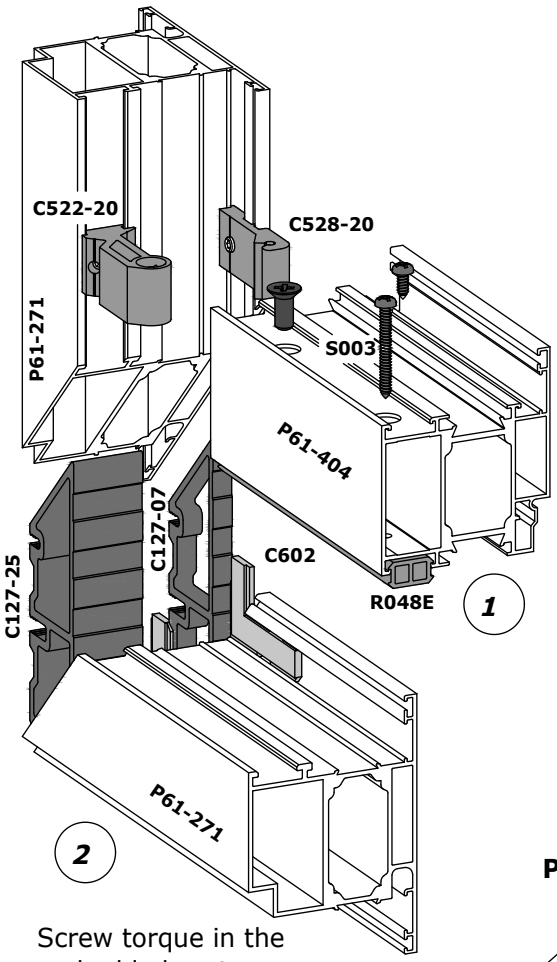

L-joint of sash P61-271 is assembled on pins

To prevent moisture leakage, seal all the joints between the impost and the sash with a neutral sealant.

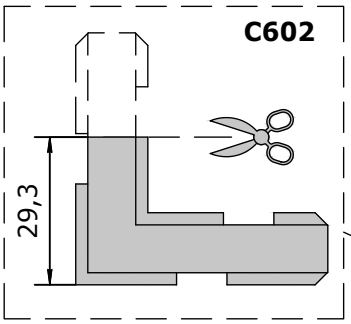

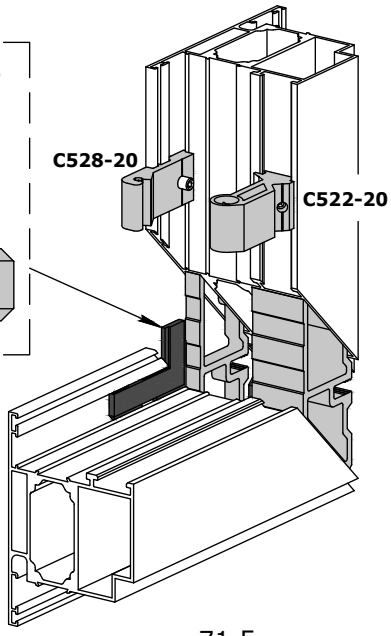

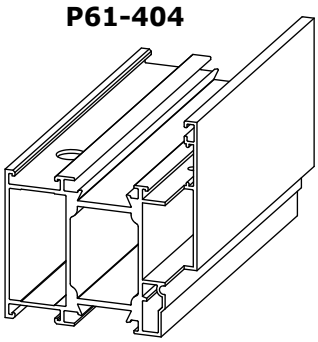

Screw torque in the embedded part **C522-20**:

screw M6 with countersunk head	min. — 4.5 N/m
	max. — 6 N/m
screw M5	min. — 2 N/m
	max. — 2.5 N/m

C528-20

screw M5	min. — 2 N/m
	max. — 2.5 N/m

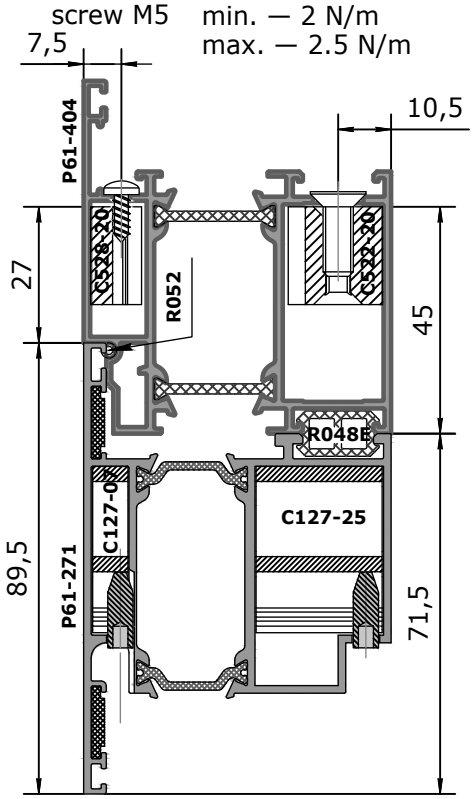

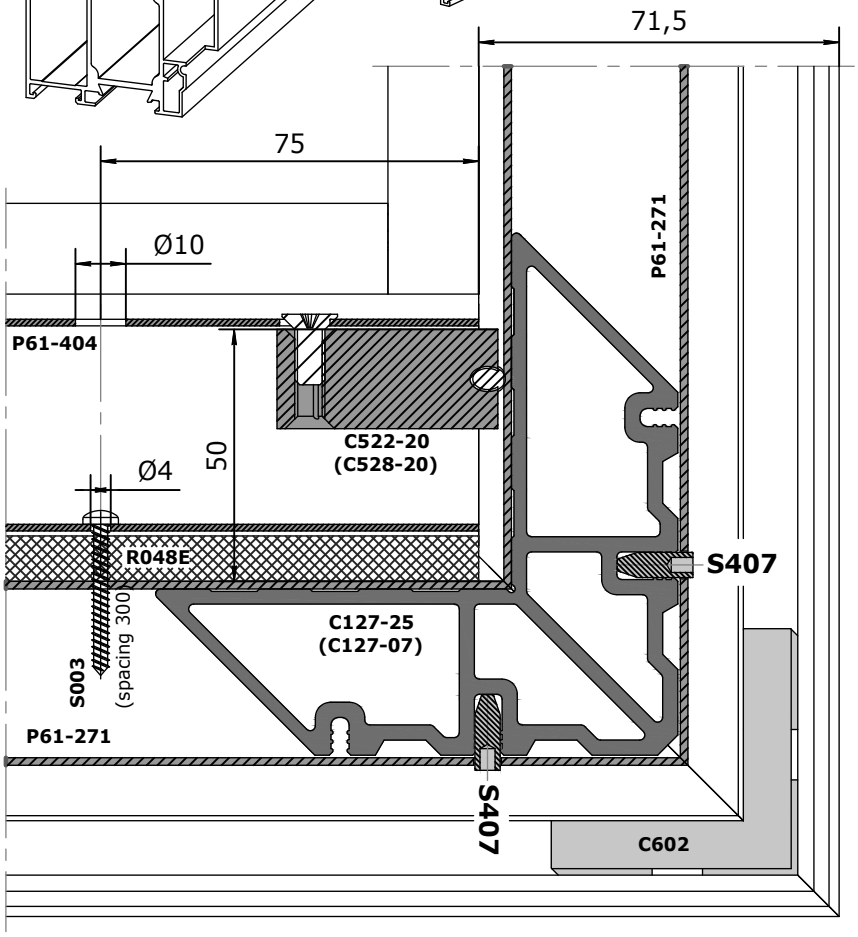

contents
profiles
delivery set
profiles (1:1)
sections
glazing tables
sub-assemblies tables
fitting arrangements
additional solutions
sub-assemblies
fire-resistant structures
connections
equipment and tools

T-joint assembly: installation of expander impost P61-405

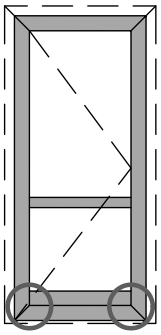

Apply one- or two-component aluminium bonding adhesive (**E006**) into the profile chamber and on the ends of the bonded profiles before installing the embedded parts. Remove any excess adhesive and wipe the joint with a special cleaner (**E007**).

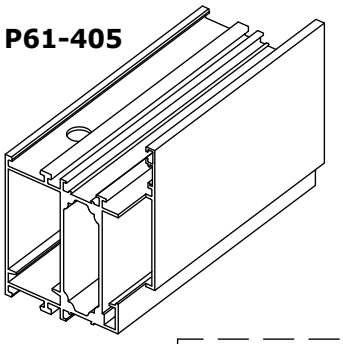

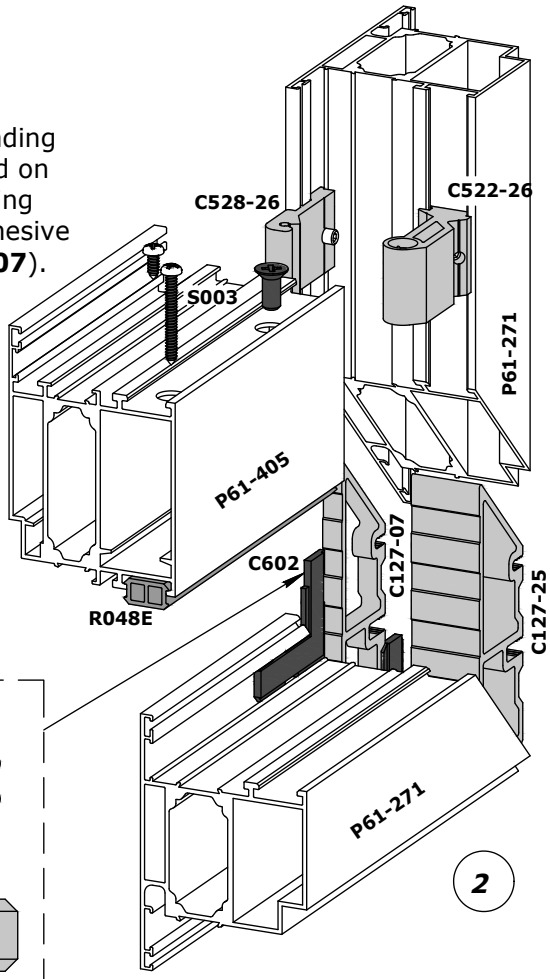

Screw torque in the embedded part **C522-26**:

screw M6 with countersunk head	min. — 4.5 N/m max. — 6 N/m
screw M5	min. — 2 N/m max. — 2.5 N/m

C528-26

screw M5	min. — 2 N/m max. — 2.5 N/m

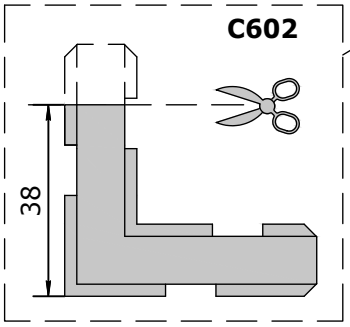

L-joint of sash P61-271 is assembled on pins

To prevent moisture leakage, seal all the joints between the impost and the sash with a neutral sealant.

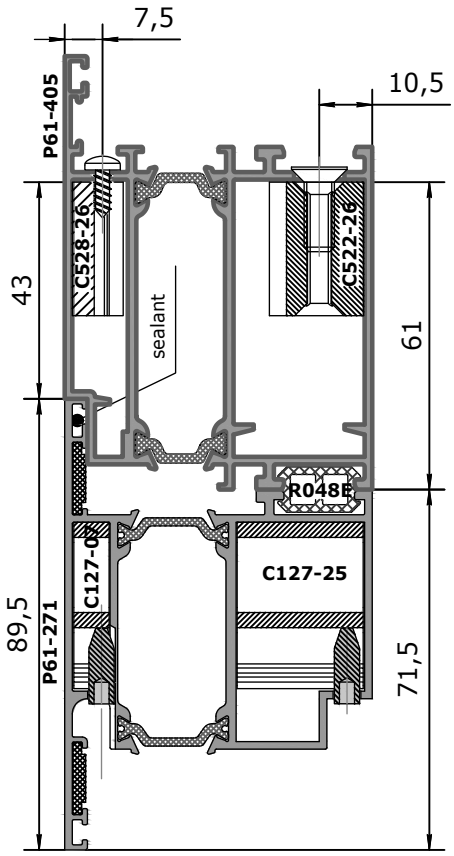

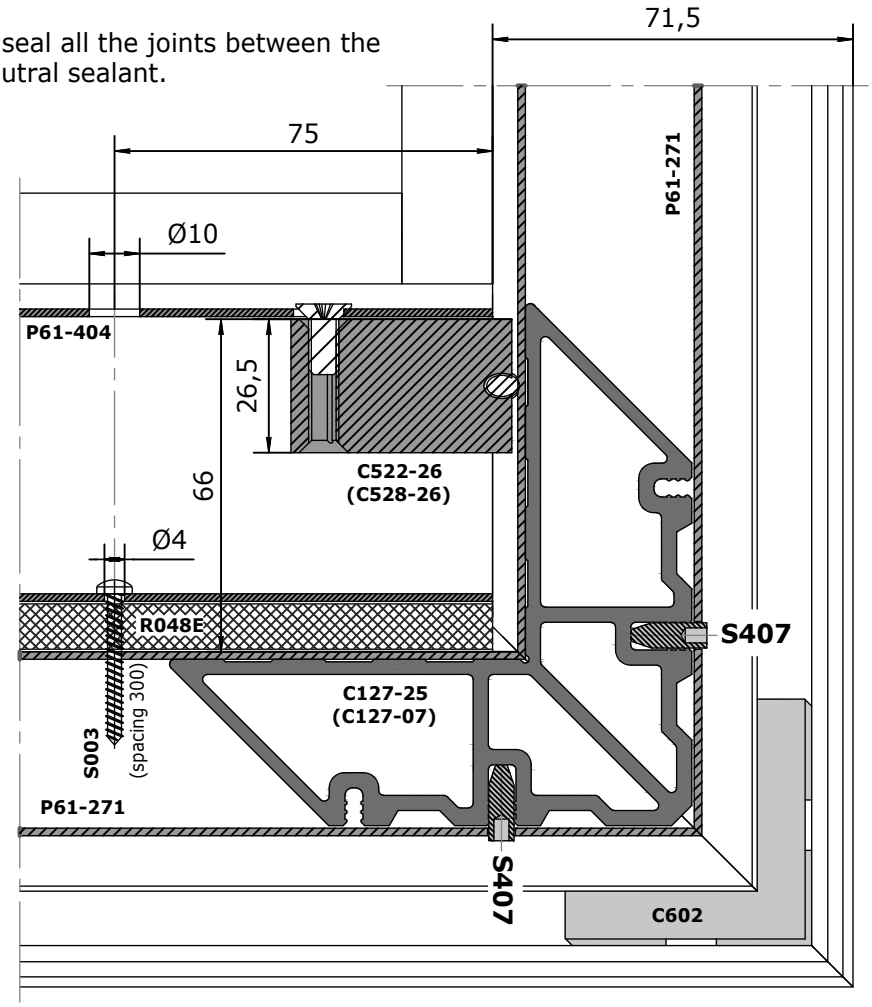

contents
profiles
delivery set
profiles (1:1)
sections
glazing tables
sub-assemblies tables
fitting arrangements
additional solutions
sub-assemblies
fire-resistant structures
connections
equipment and tools

T-joint assembly: installation of an inclined impost into the door sash

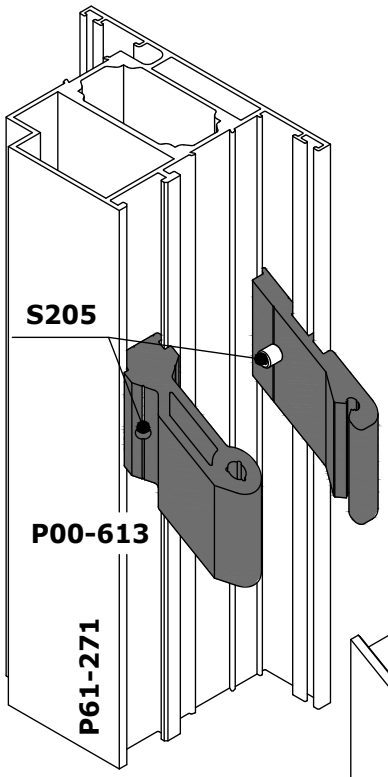

Screw torque in embedded parts **P00-613**:

S202 screw M6 x 14 with countersunk head	min. — 4.5 N/m max. — 6 N/m
S205 set screw M5	min. — 2 N/m max. — 2.5 N/m

P00-612-3

S205 set screw M5	min. — 2 N/m max. — 2.5 N/m

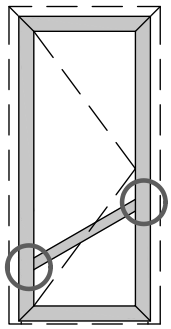

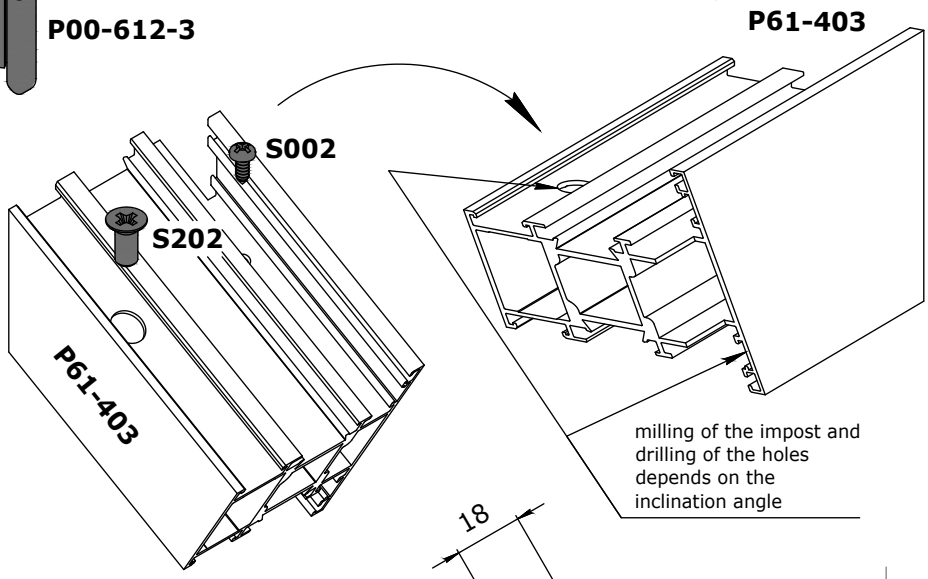

milling of the impost and drilling of the holes depends on the inclination angle

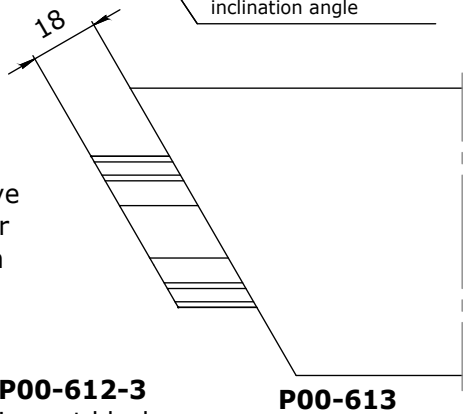

Apply one- or two-component aluminium bonding adhesive (**E006**) into the profile chamber and on the ends of the bonded profiles before installing the embedded parts. Remove any excess adhesive and wipe the joint with a special cleaner (**E007**). To prevent moisture leakage, seal the joint between the impost and the sash with a neutral sealant.

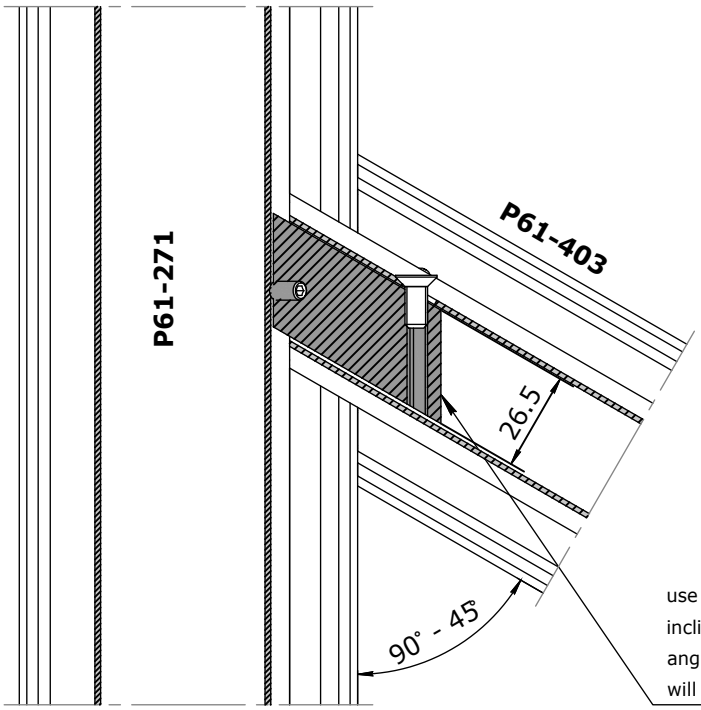

P00-612-3
impost block external

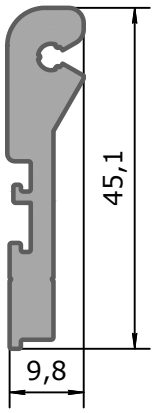

P00-613
impost block internal

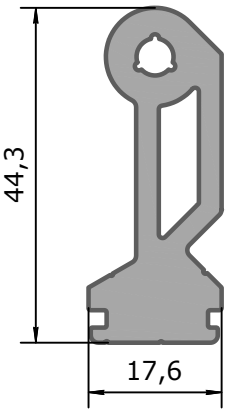

use profiles P00-612-3 and P00-613 for manufacture of inclined embedded parts. Depending on the inclination angle of the impost, the angle for cutting the block profiles will vary.

contents
profiles
delivery set
profiles (1:1)
sections
glazing tables
sub-assemblies tables
fitting arrangements
additional solutions
sub-assemblies
fire-resistant structures
connections
equipment and tools

L-joint assembly:
Mating the frame P61-271 and P61-171

Apply one- or two-component aluminium bonding adhesive (**E006**) into the profile chamber and on the ends of the bonded profiles before installing the embedded parts. Remove any excess adhesive and wipe the joint with a special cleaner (**E007**).

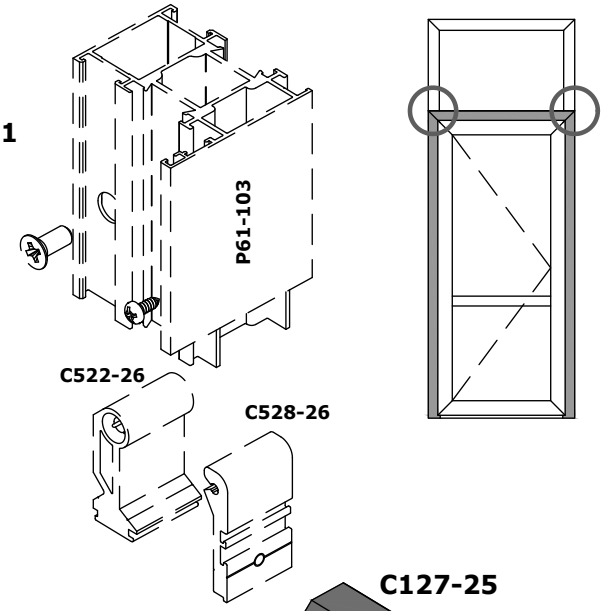

Crimping assembly

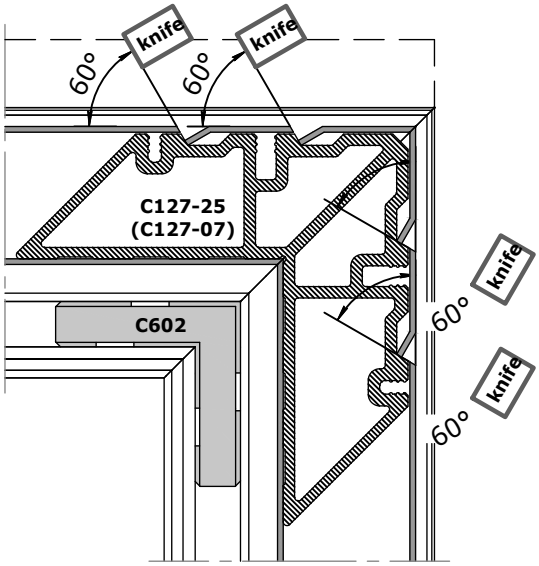

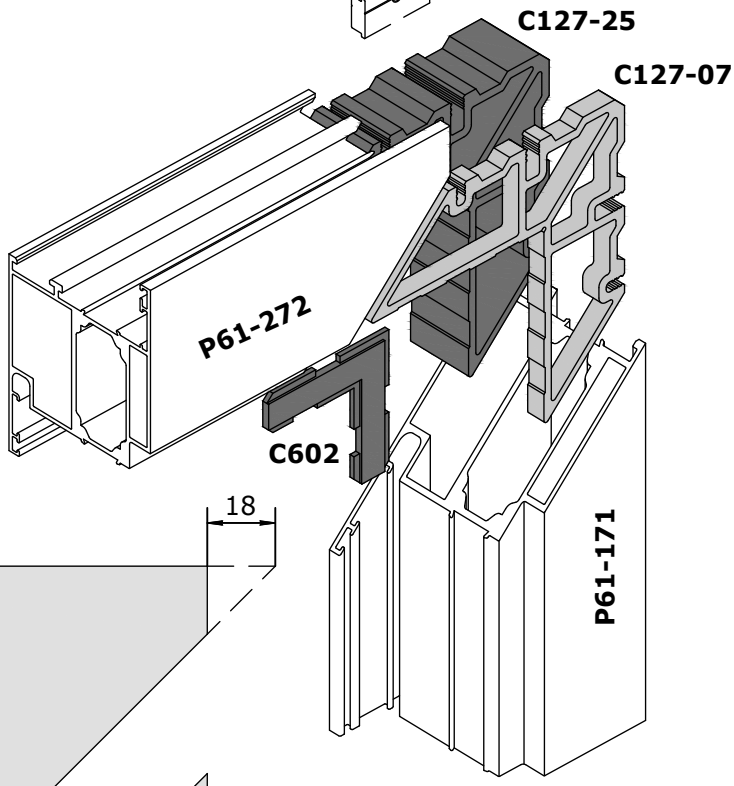

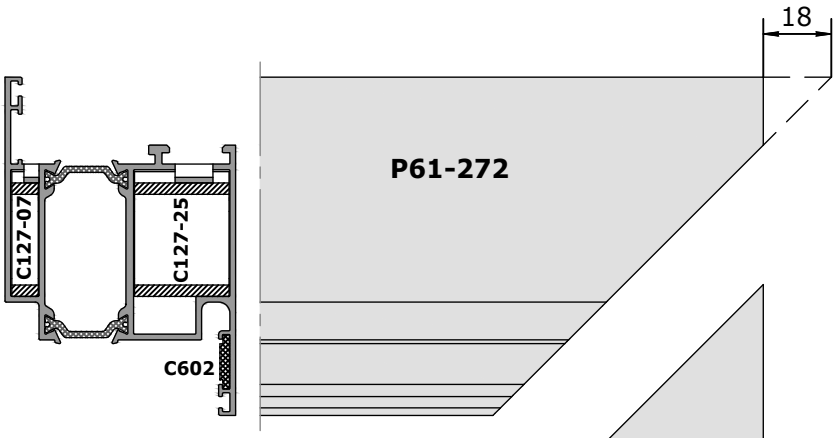

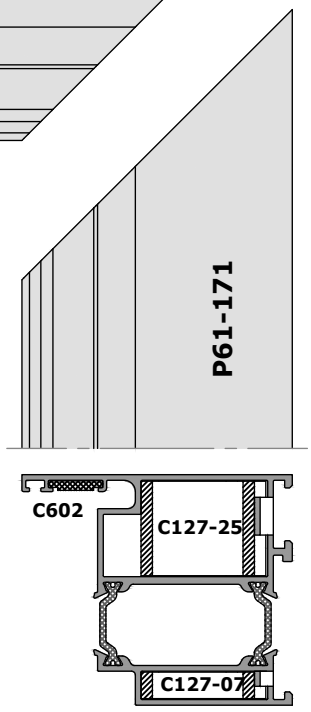

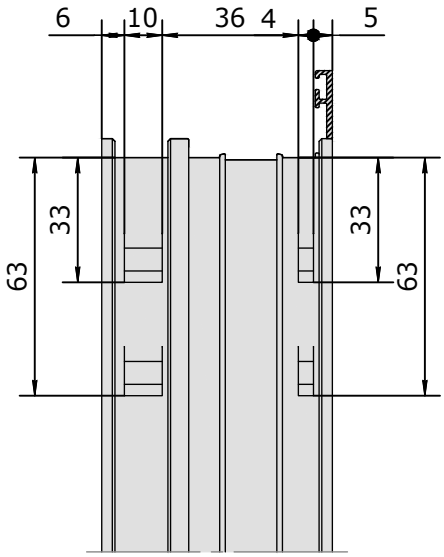

contents
profiles
delivery set
profiles (1:1)
sections
glazing tables
sub-assemblies tables
fitting arrangements
additional solutions
sub-assemblies
fire-resistant structures
connections
equipment and tools

T-joint assembly: installation of frame P61-103

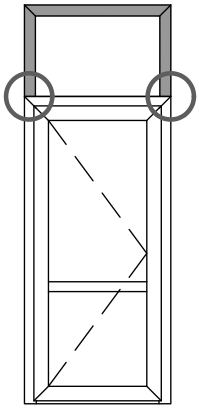

Screw torque in the embedded part

C552-26:

screw M6 with countersunk head — min. — 4.5 N/m, max. — 6 N/m

screw M5 — min. — 2 N/m, max. — 2.5 N/m

C558-26

screw M5 — min. — 2 N/m, max. — 2.5 N/m

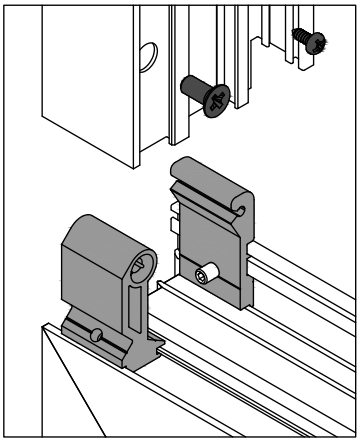

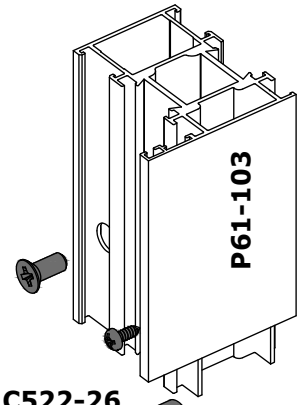

C522-26

C528-26

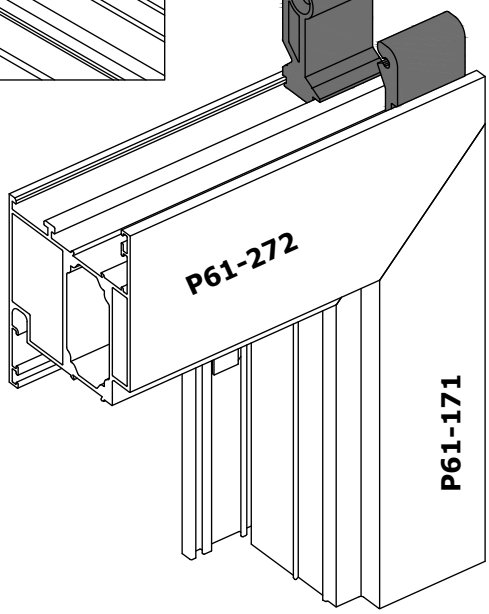

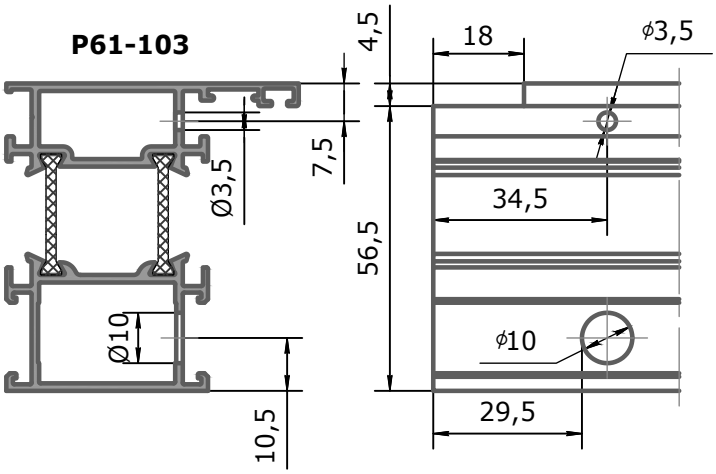

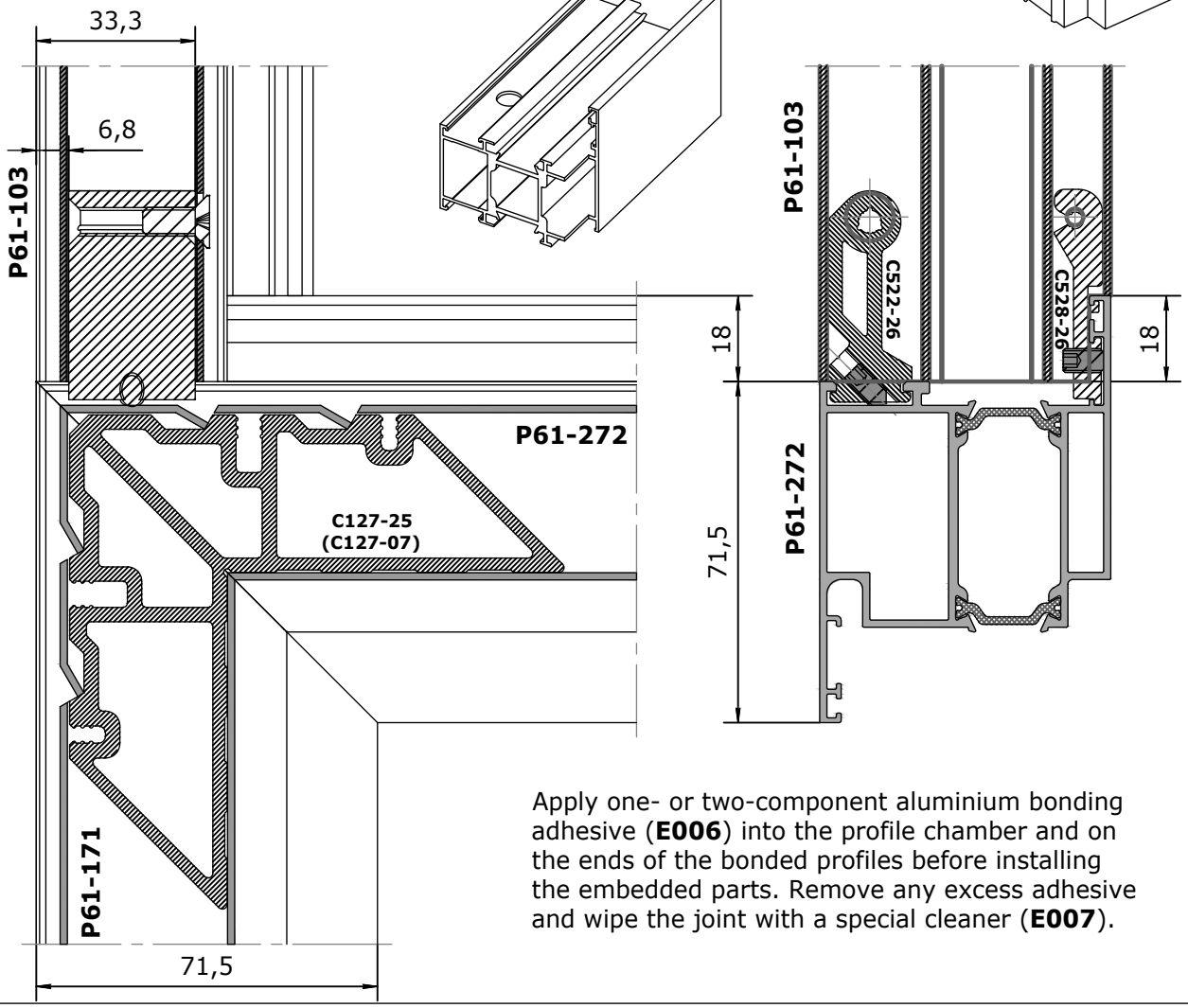

Apply one- or two-component aluminium bonding adhesive (**E006**) into the profile chamber and on the ends of the bonded profiles before installing the embedded parts. Remove any excess adhesive and wipe the joint with a special cleaner (**E007**).

contents
profiles
delivery set
profiles (1:1)
sections
glazing tables
sub-assemblies tables
fitting arrangements
additional solutions
sub-assemblies
fire-resistant structures
connections
equipment and tools

T-joint assembly: installation of base P61-212-190

Apply one- or two-component aluminium bonding adhesive (**E006**) into the profile chamber and on the ends of the bonded profiles before installing the embedded parts. Remove any excess adhesive and wipe the joint with a special cleaner (**E007**).

To prevent moisture leakage along the sash, seal the joints between the base and the sash with a neutral sealant.

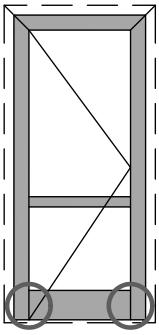

Screw torques in the embedded parts **C522-26**:

screw M6 with countersunk head	min. — 4.5 N/m max. — 6 N/m
screw M5	min. — 2 N/m max. — 2.5 N/m

C528-26

screw M5	min. — 2 N/m max. — 2.5 N/m

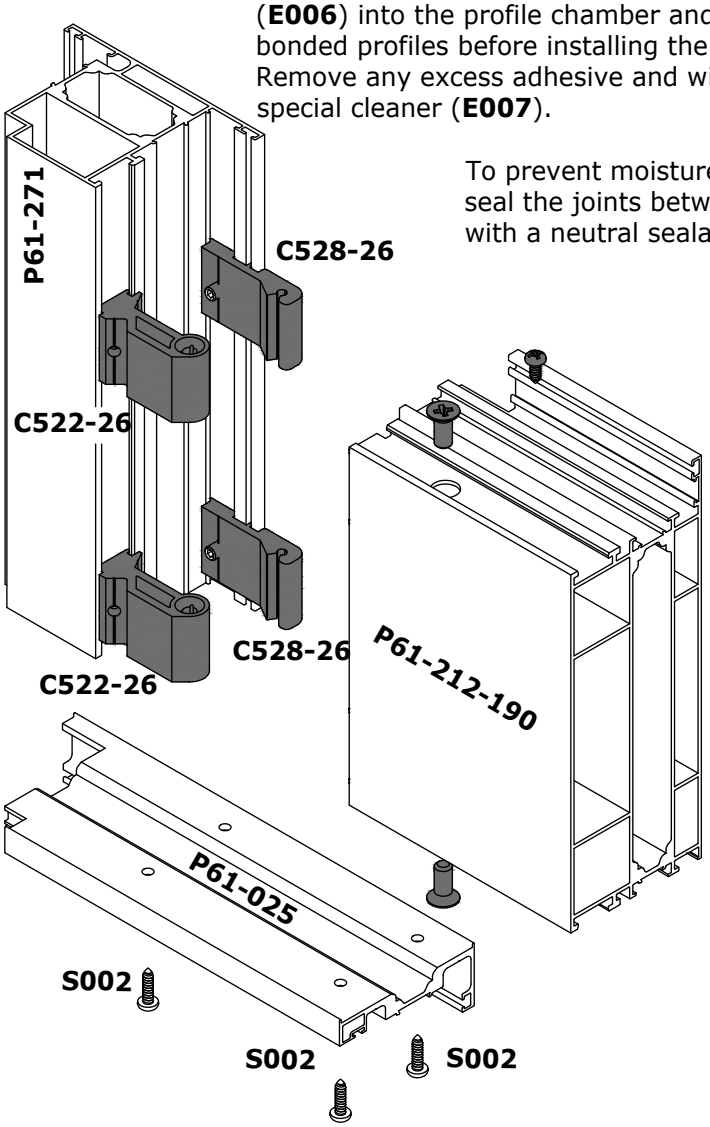

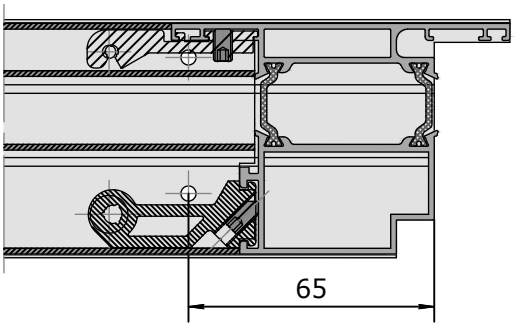

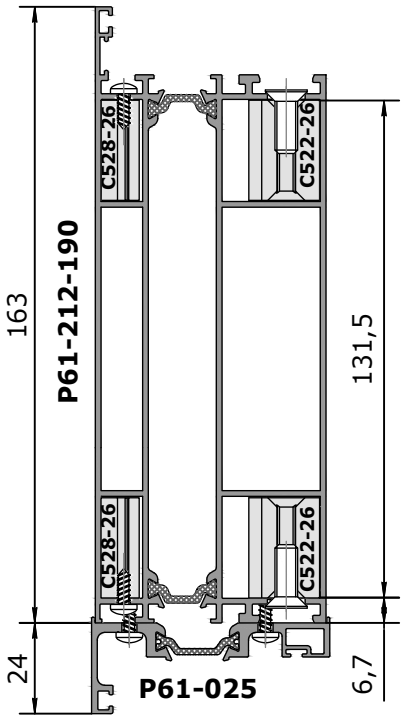

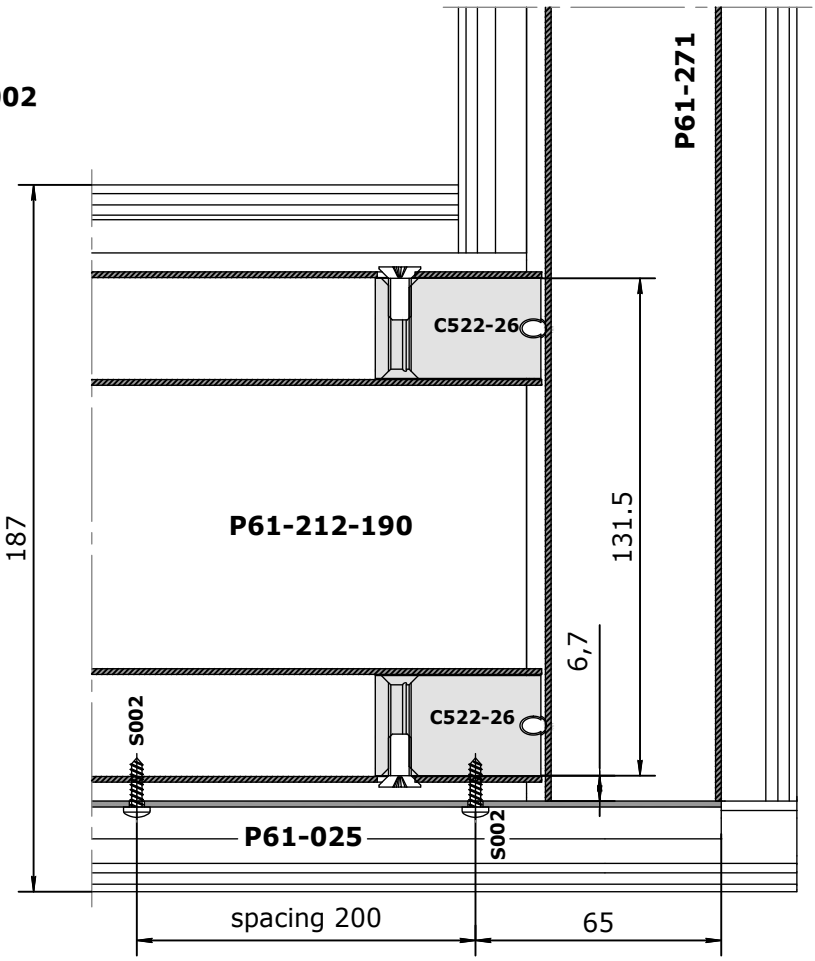

contents
profiles
delivery set
profiles (1:1)
sections
glazing tables
sub-assemblies tables
fitting arrangements
additional solutions
sub-assemblies
fire-resistant structures
connections
equipment and tools

Machining: base profiles P61-212-190

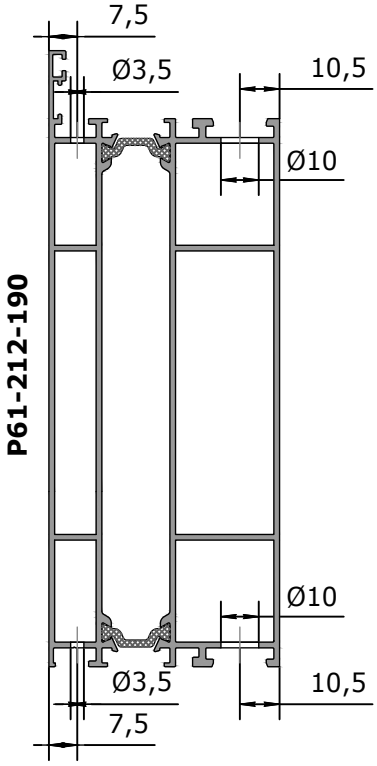

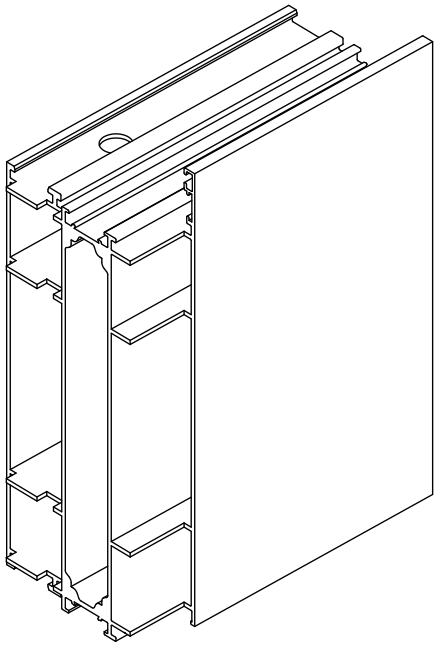

P61-025

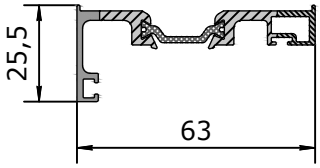

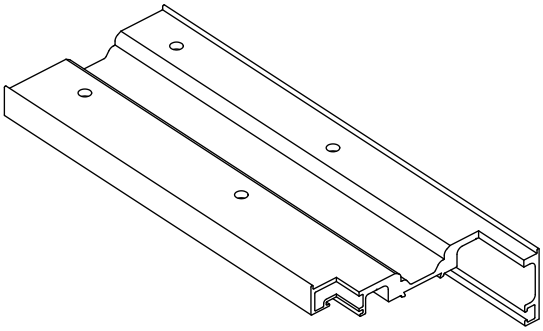

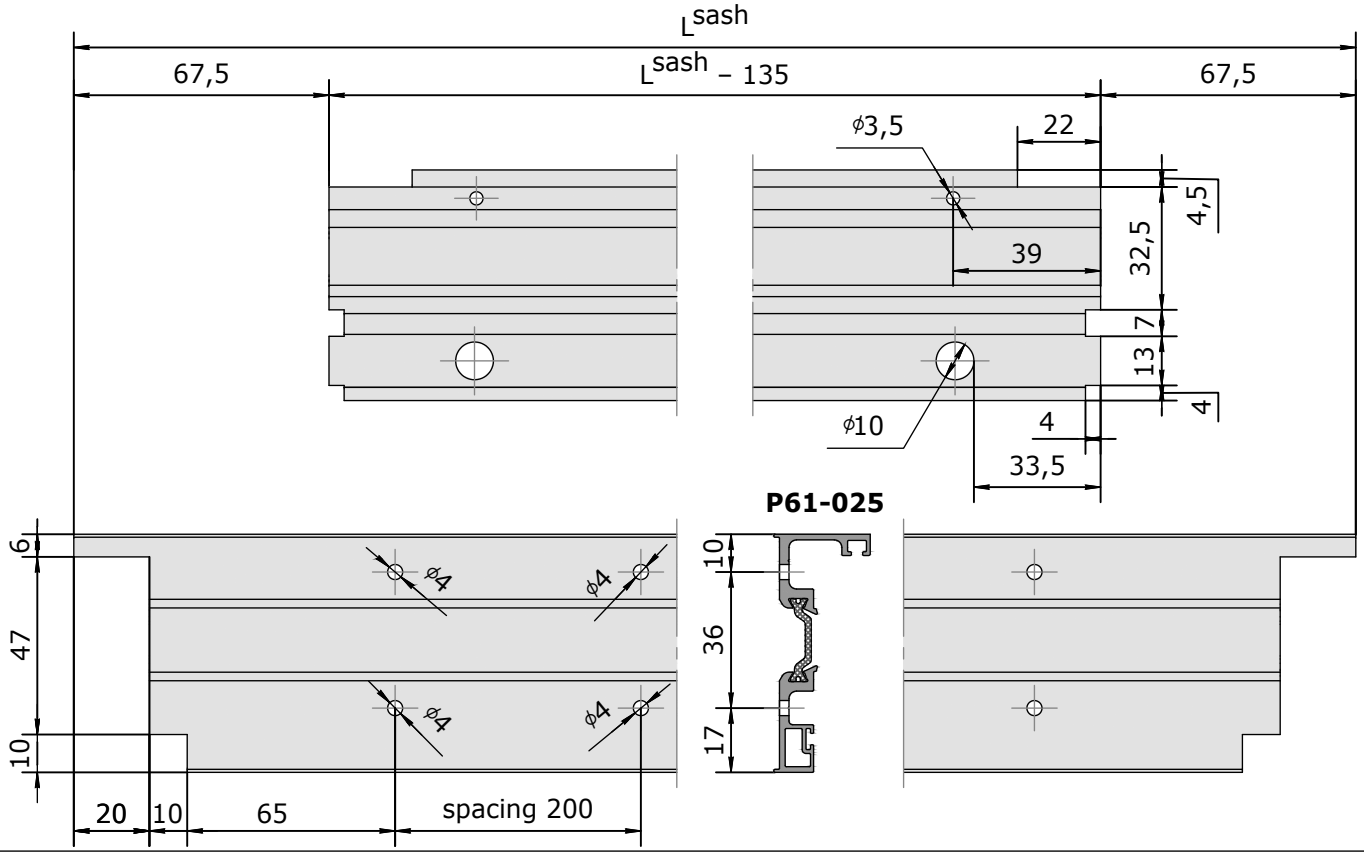

contents
profiles
delivery set
profiles (1:1)
sections
glazing tables
sub-assemblies tables
fitting arrangements
additional solutions
sub-assemblies
fire-resistant structures
connections
equipment and tools

End cap installation

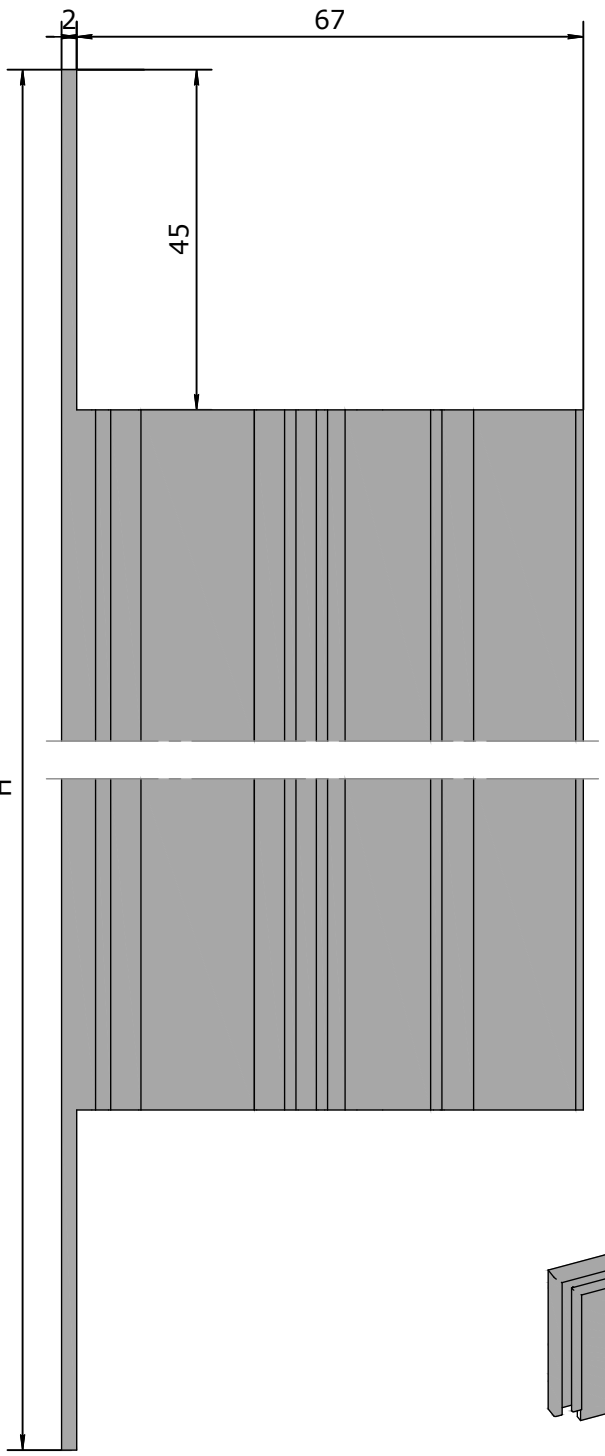

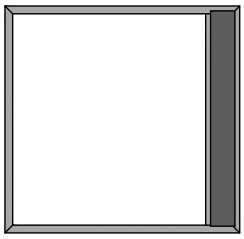

When installing corner caps and end profiles, ensure that they are additionally secured with adhesive. Apply adhesive all around the joint plane.

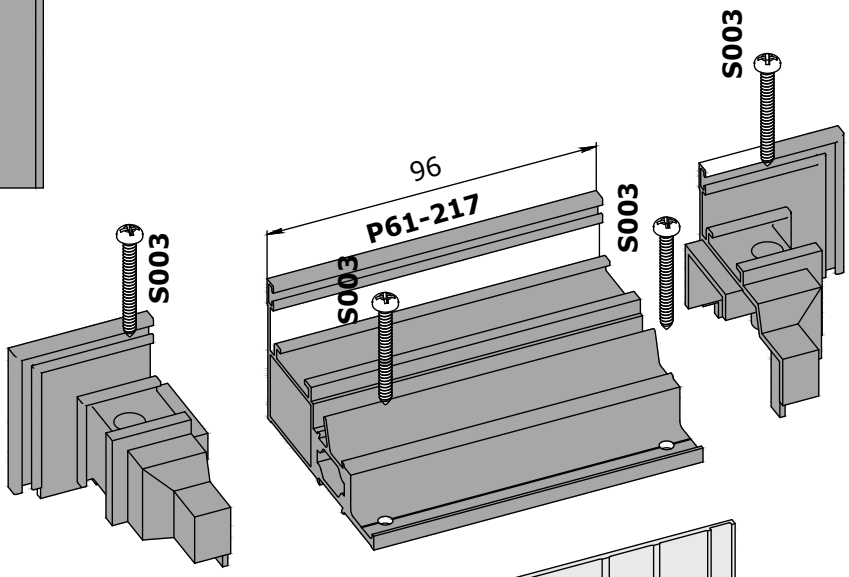

F081-61-100
corner caps of ventilation sash (pair)

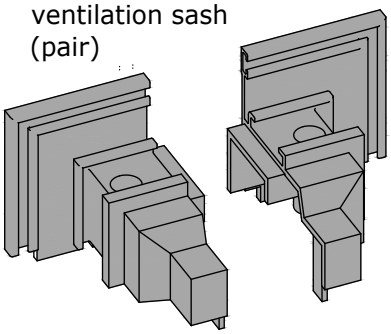

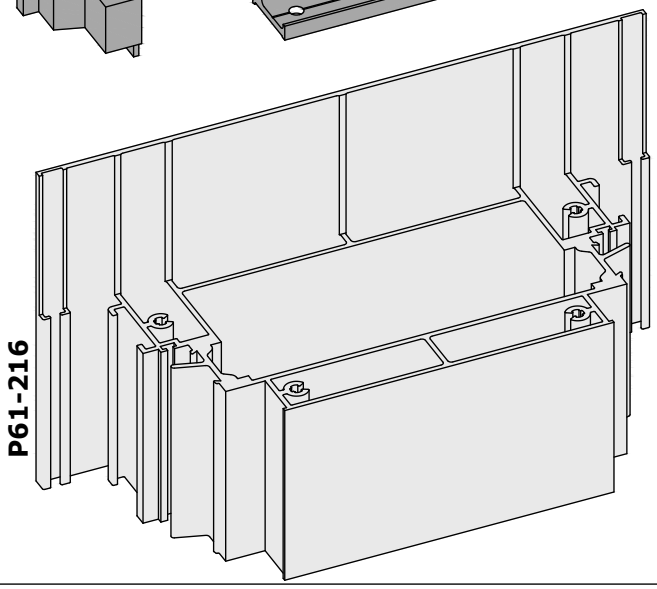

contents
profiles
delivery set
profiles (1:1)
sections
glazing tables
sub-assemblies tables
fitting arrangements
additional solutions
sub-assemblies
fire-resistant structures
connections
equipment and tools

Restraint installation diagram

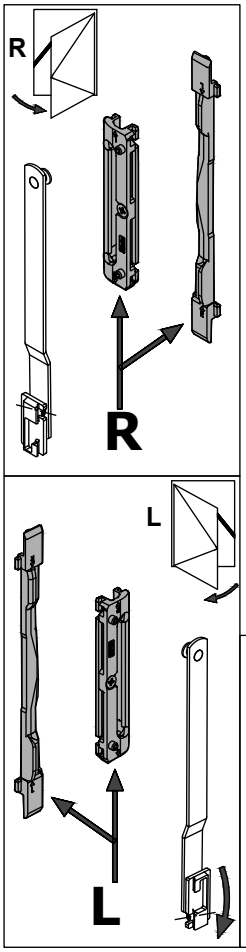

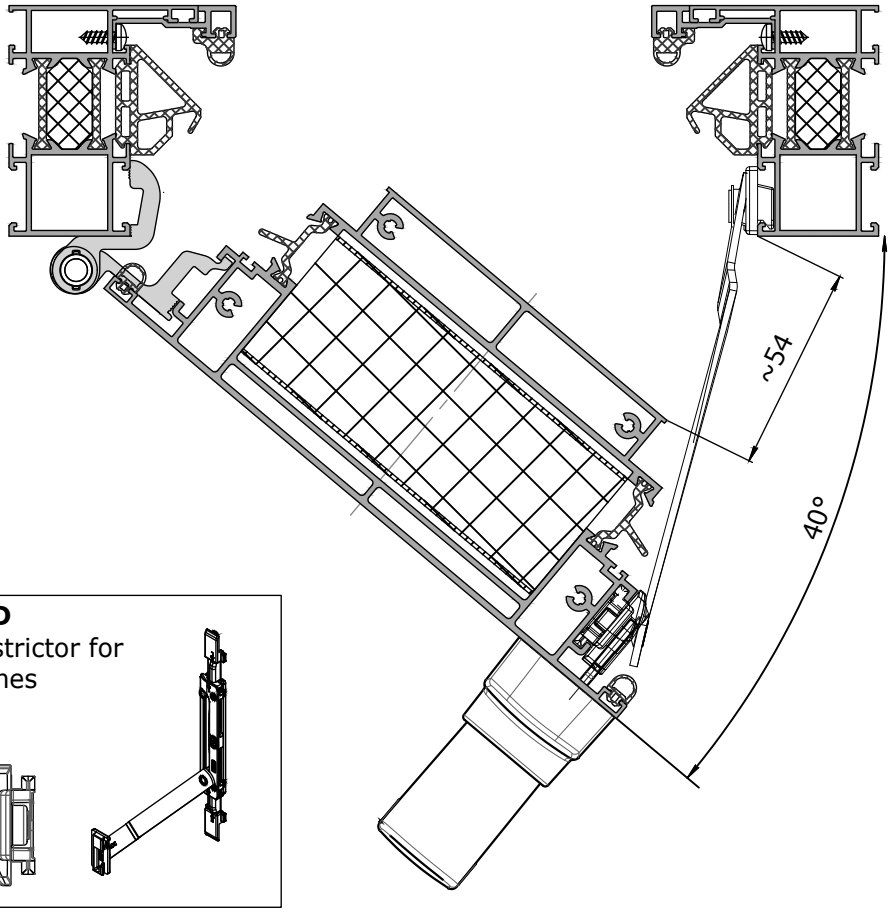

FF-1457KD
opening restrictor for narrow sashes

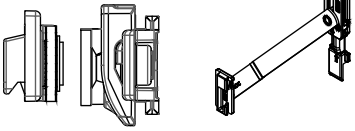

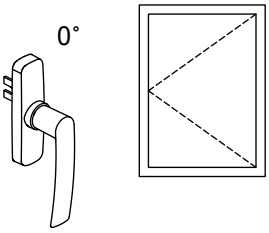

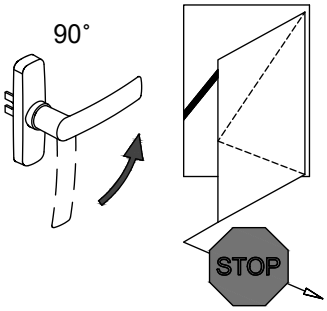

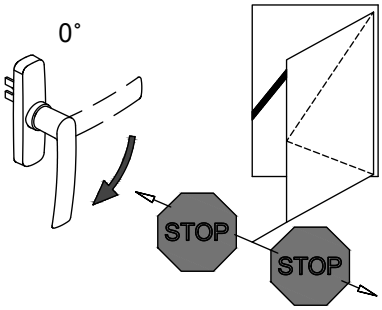

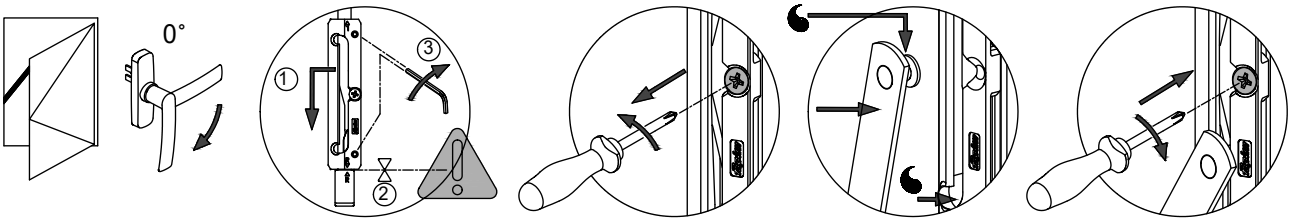

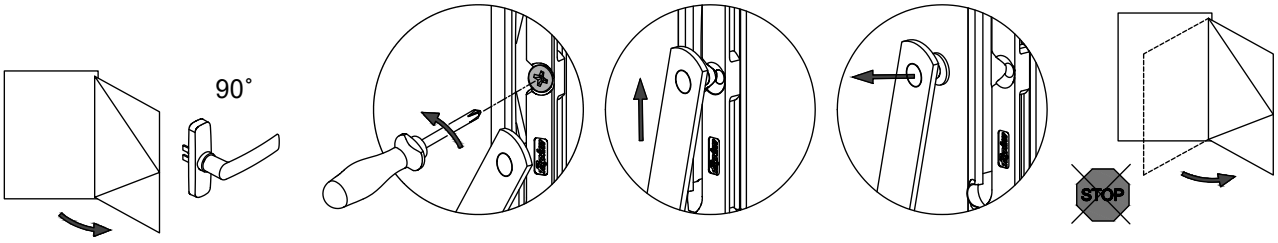

Fittings installation diagram

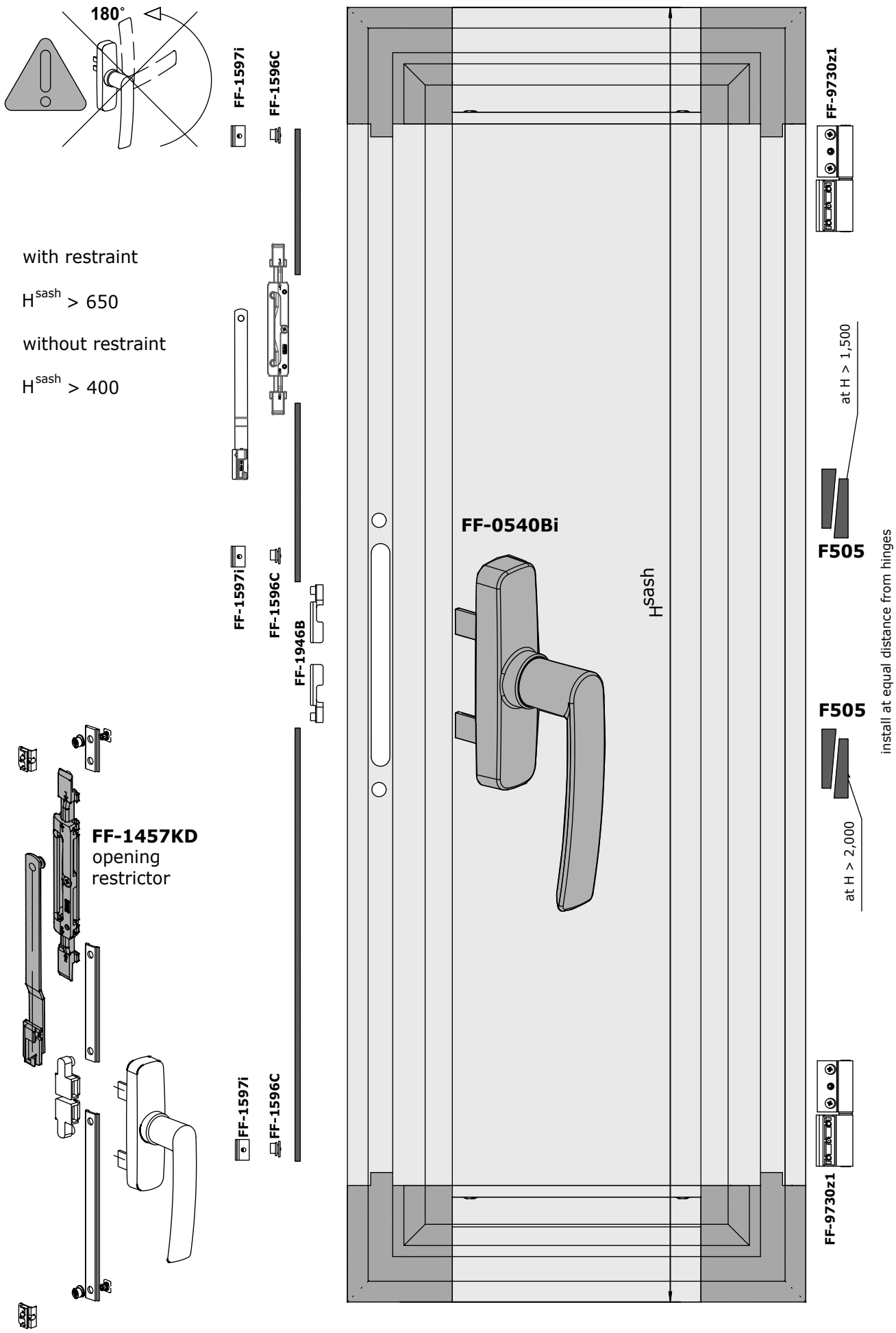

contents
profiles
delivery set
profiles (1:1)
sections
glazing tables
sub-assemblies tables
fitting arrangements
additional solutions
sub-assemblies
fire-resistant structures
connections
equipment and tools

Sash gasket installation diagram

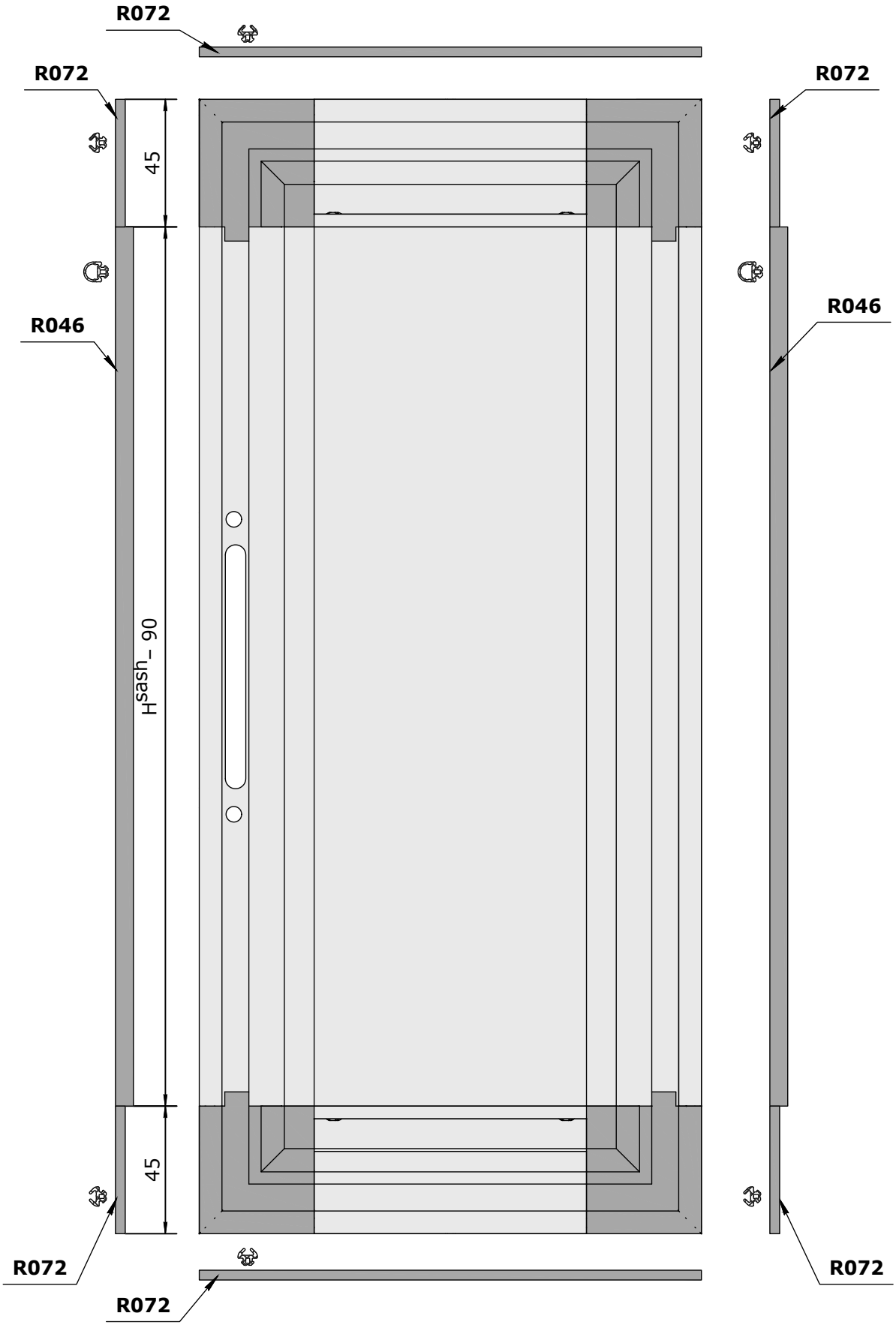

R046 is used as internal rabbet ledge gasket and fitted in the aluminium profile of ventilator sash. Gasket R072 is fitted in the plastic covers of ventilator sash. The gaskets must be inserted into each other at the joints. Short sections of gaskets shall be bonded to the (cap) profile groove.

contents
profiles
delivery set
profiles (1:1)
sections
glazing tables
sub-assemblies tables
fitting arrangements
additional solutions
sub-assemblies
fire-resistant structures
connections
equipment and tools

Installation of ventilation sash in Masttech-61 stained-glass window

Apply one- or two-component aluminium bonding adhesive (**E006**) into the profile chamber and on the ends of the bonded profiles before installing the embedded parts. Remove any excess adhesive and wipe the joint with a special cleaner (**E007**). To prevent moisture leakage, seal the joints between the imposts and the sash with a neutral sealant.

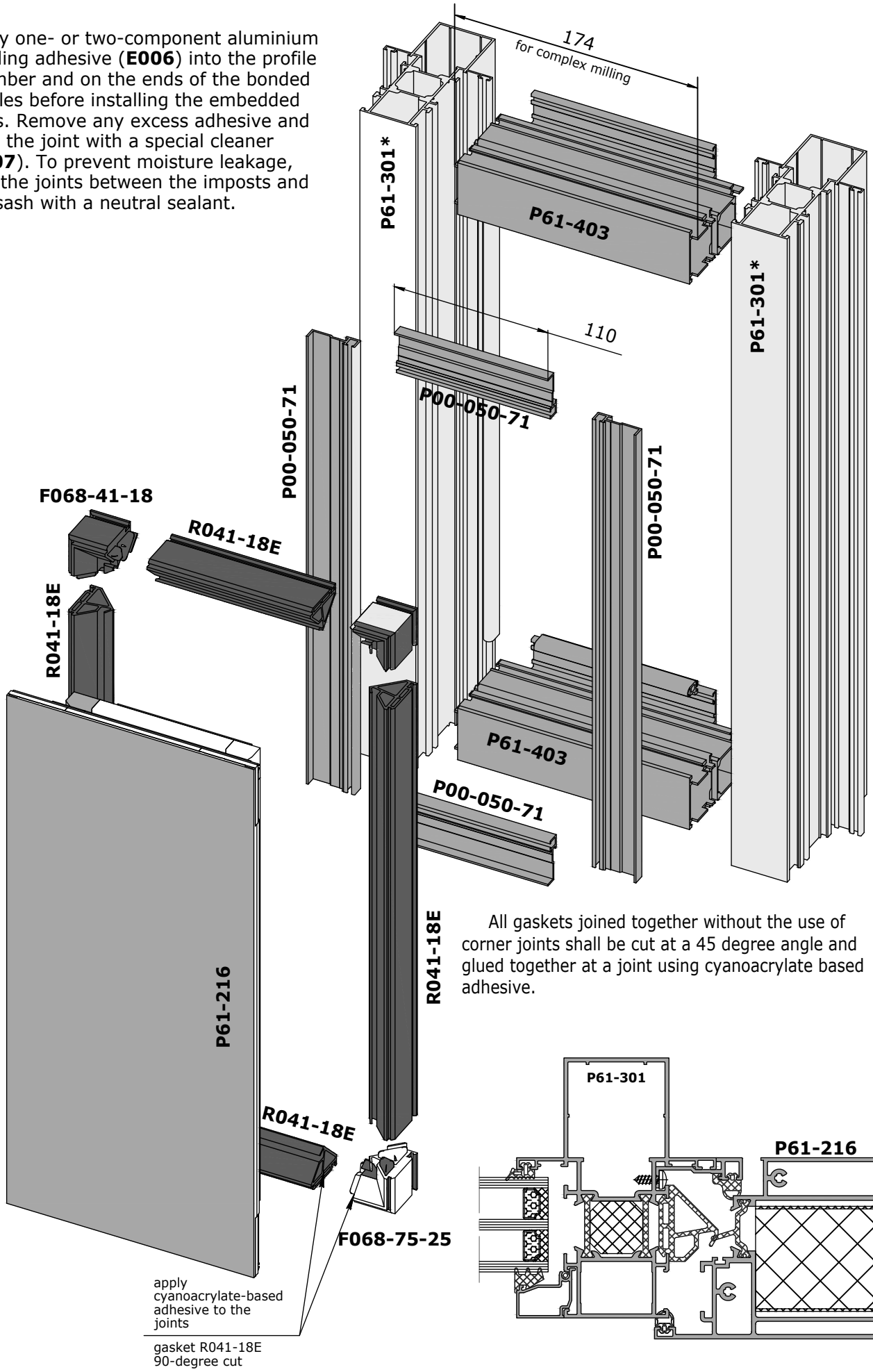

All gaskets joined together without the use of corner joints shall be cut at a 45 degree angle and glued together at a joint using cyanoacrylate based adhesive.

Machining for handle installation

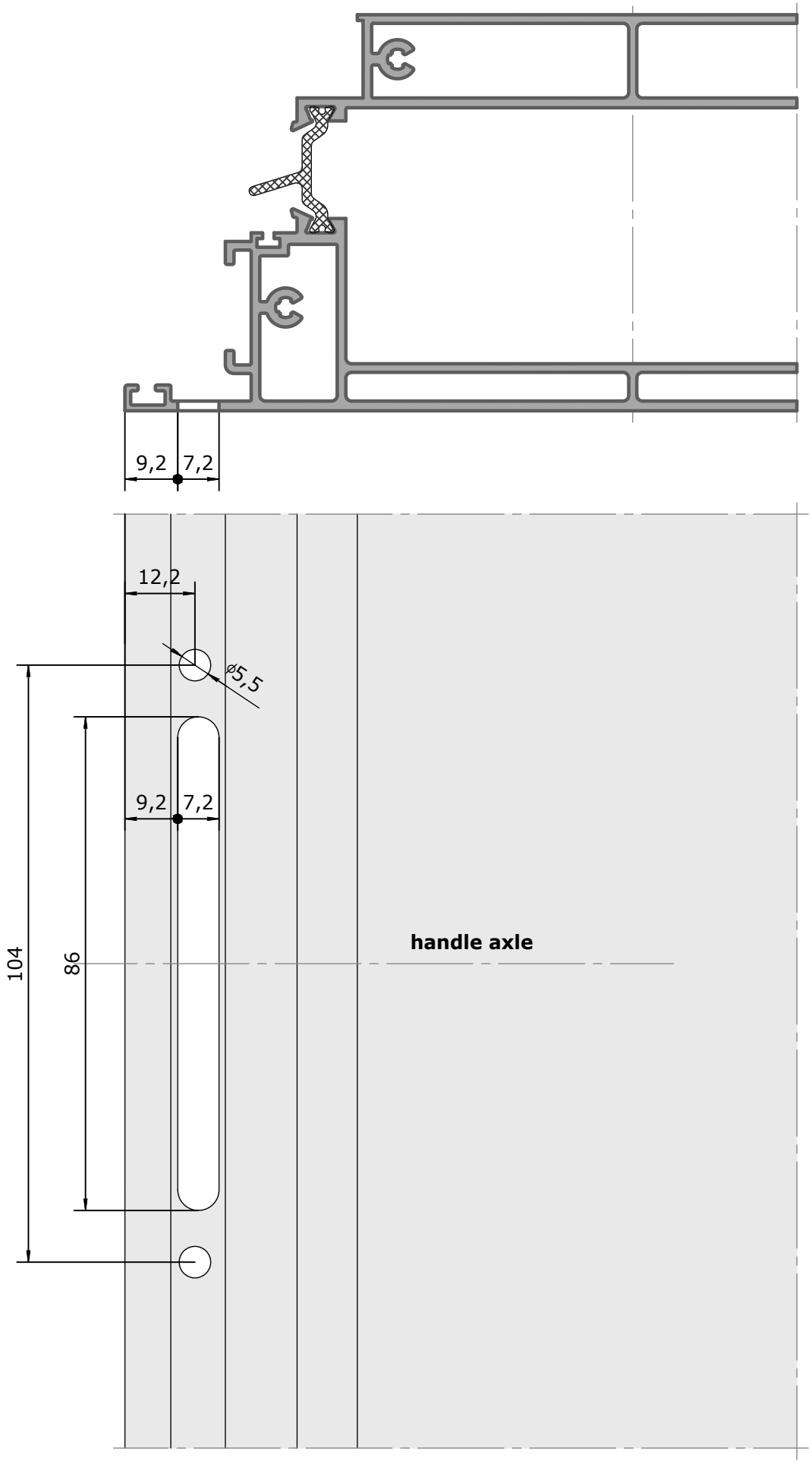

contents
profiles
delivery set
profiles (1:1)
sections
glazing tables
sub-assemblies tables
fitting arrangements
additional solutions
sub-assemblies
fire-resistant structures
connections
equipment and tools

Mullion cap installation

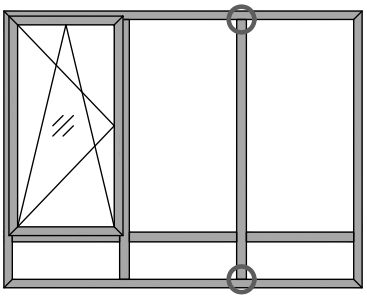

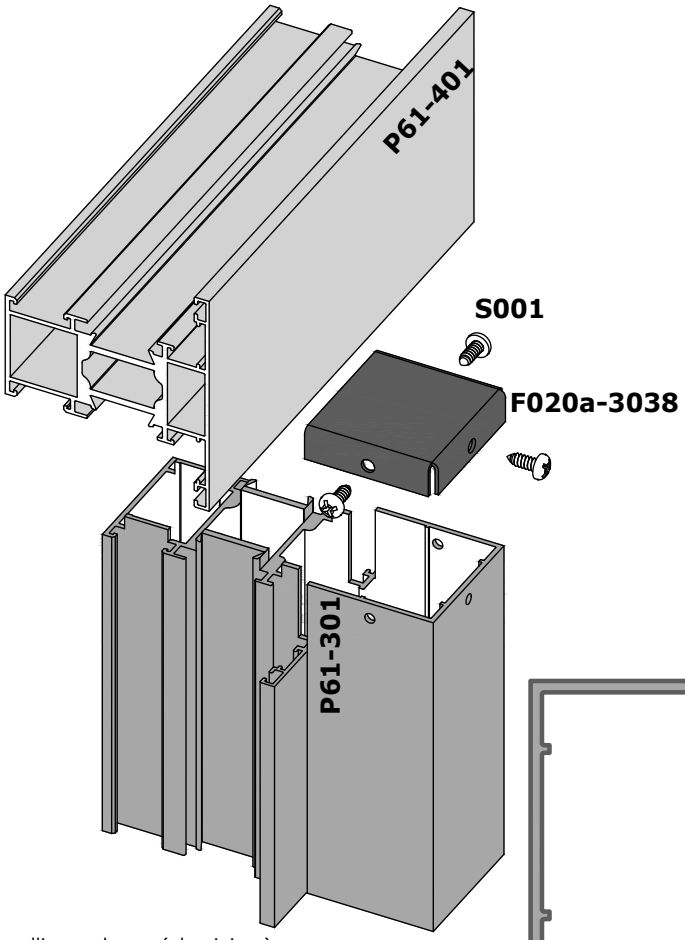

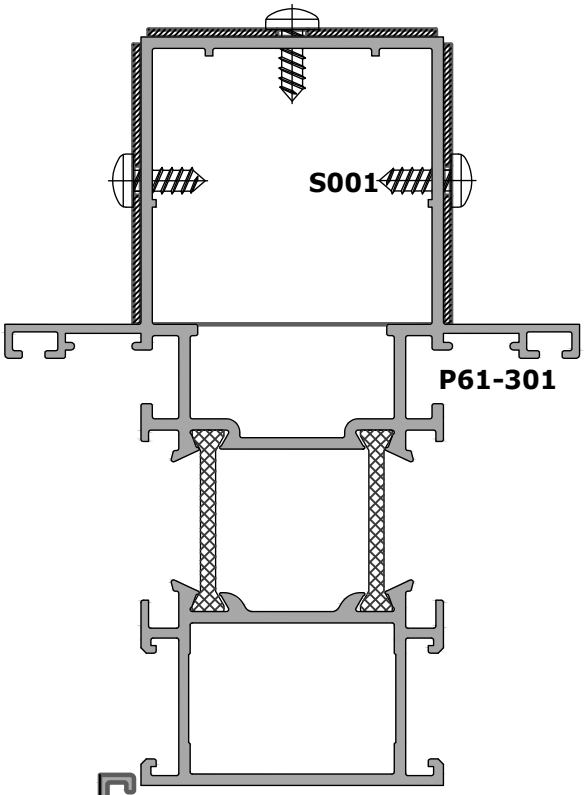

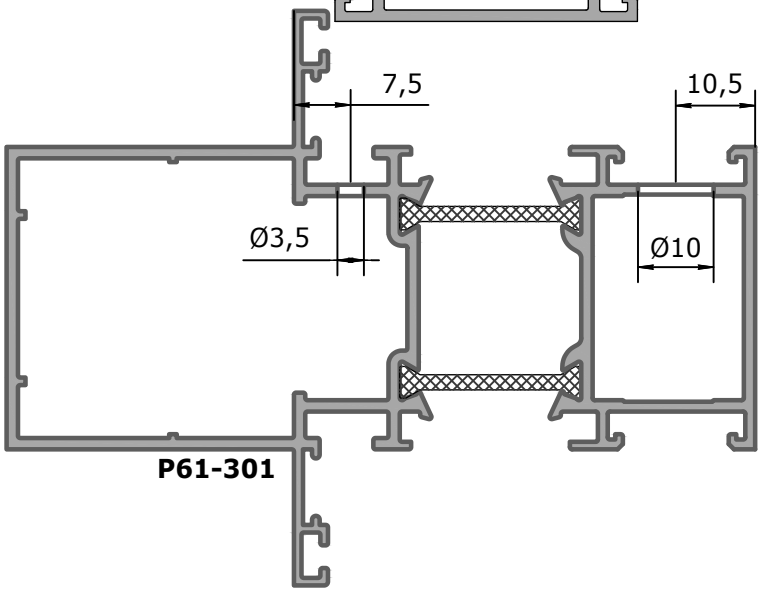

mullion end caps (aluminium)
F020a-3038— for P61-301
F020a-3053— for P61-302
F020a-3073— for P61-303

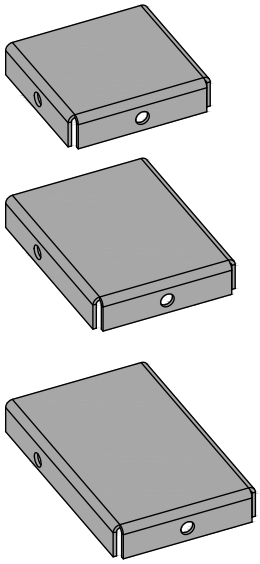

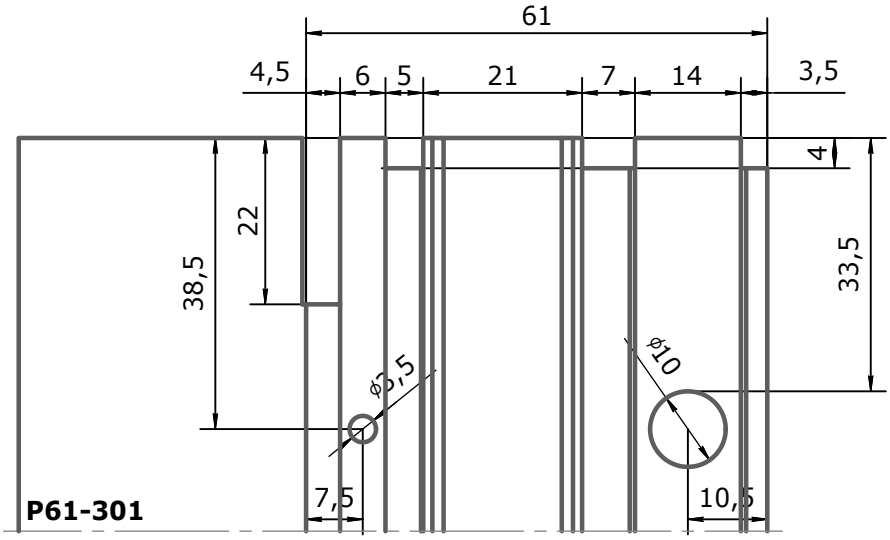

contents
profiles
delivery set
profiles (1:1)
sections
glazing tables
sub-assemblies tables
fitting arrangements
additional solutions
sub-assemblies
fire-resistant structures
connections
equipment and tools

Thrust plate joint assembly

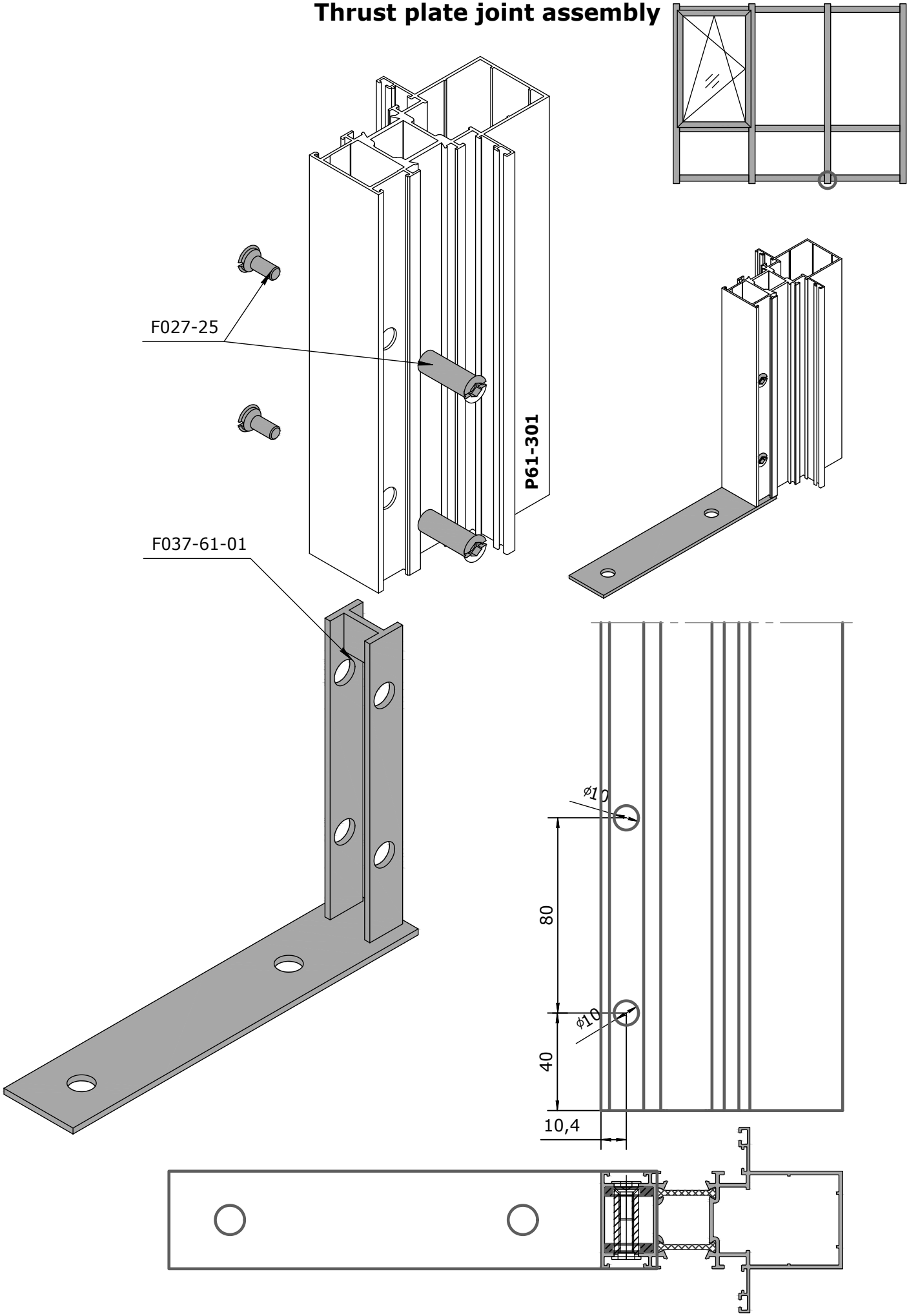

contents
profiles
delivery set
profiles (1:1)
sections
glazing tables
sub-assemblies tables
fitting arrangements
additional solutions
sub-assemblies
fire-resistant structures
connections
equipment and tools

contents
profiles
delivery set
profiles (1:1)
sections
glazing tables
sub-assemblies tables
fitting arrangements
additional solutions
sub-assemblies
fire-resistant structures
connections
equipment and tools

Guard grille assembly

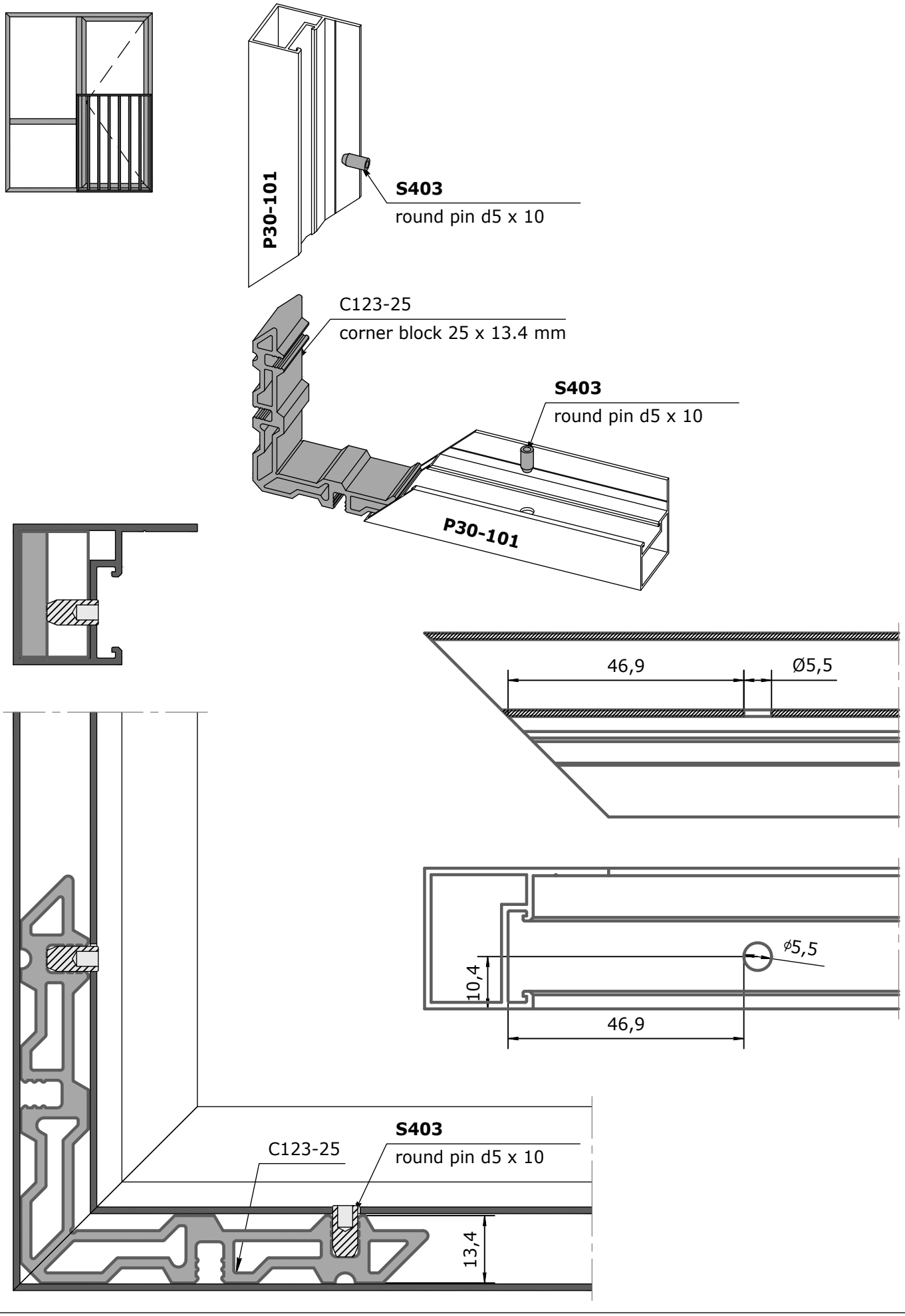

contents
profiles
delivery set
profiles (1:1)
sections
glazing tables
sub-assemblies tables
fitting arrangements
additional solutions
sub-assemblies
fire-resistant structures
connections
equipment and tools

contents
profiles
delivery set
profiles (1:1)
sections
glazing tables
sub-assemblies tables
fitting arrangements
additional solutions
sub-assemblies
fire-resistant structures
connections
equipment and tools

Arrangement of moisture removal system
Drainage cap F031-50

F031-50
Water drain hole cap
(for MasTTech systems)

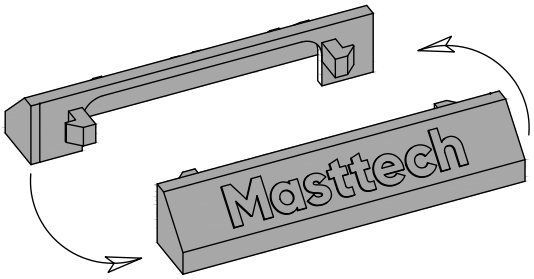

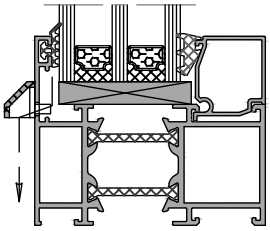

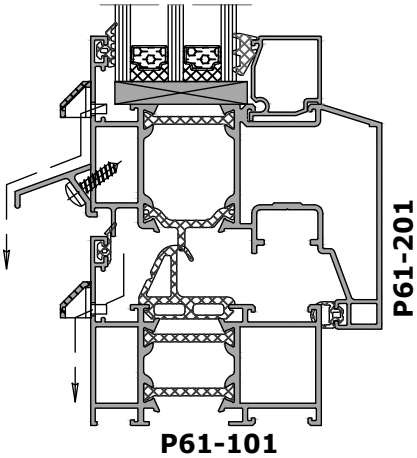

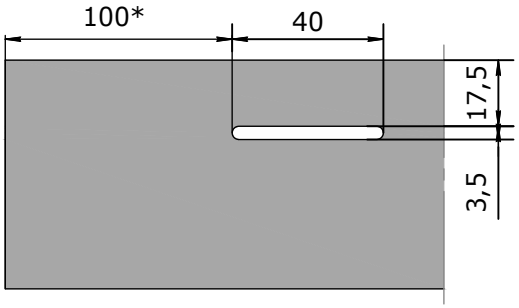

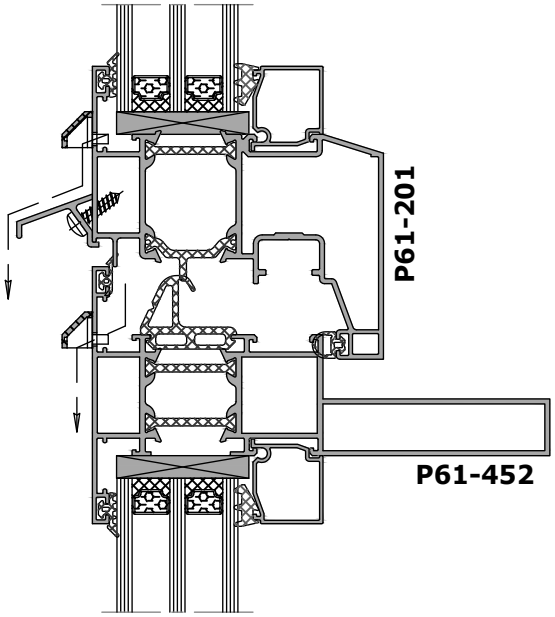

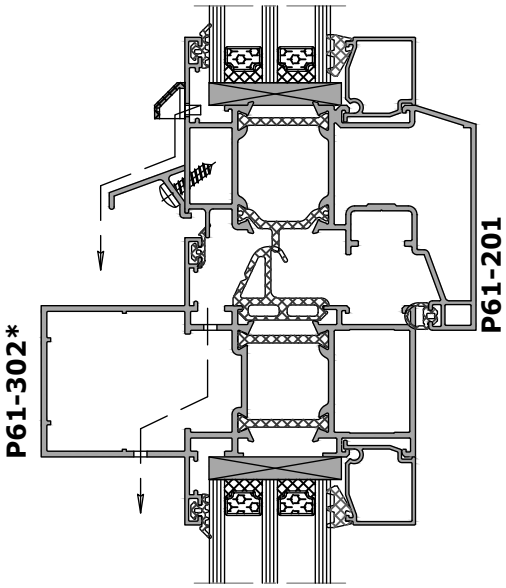

contents
profiles
delivery set
profiles (1:1)
sections
glazing tables
sub-assemblies tables
fitting arrangements
additional solutions
sub-assemblies
fire-resistant structures
connections
equipment and tools

Arrangement of moisture removal system
Drainage cap F031

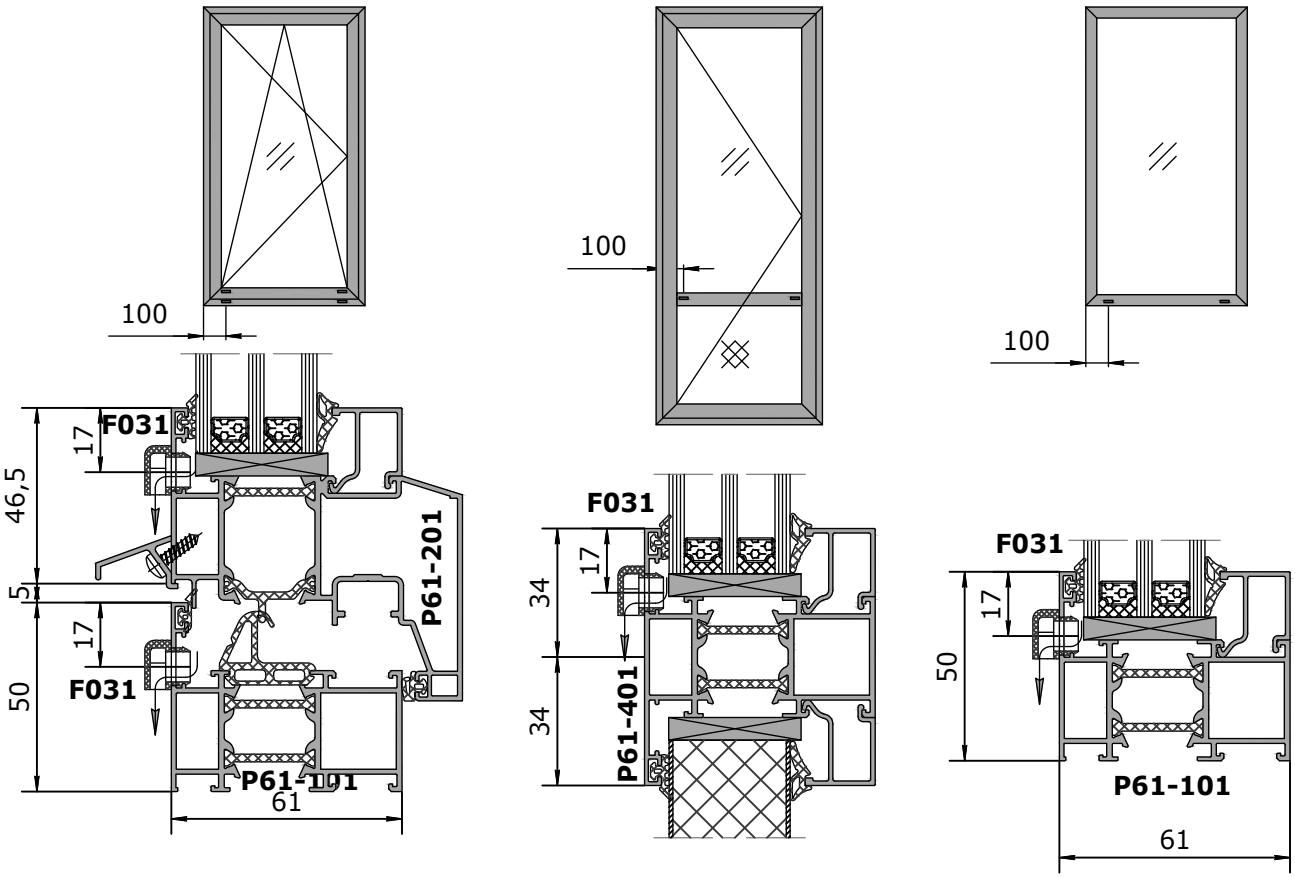

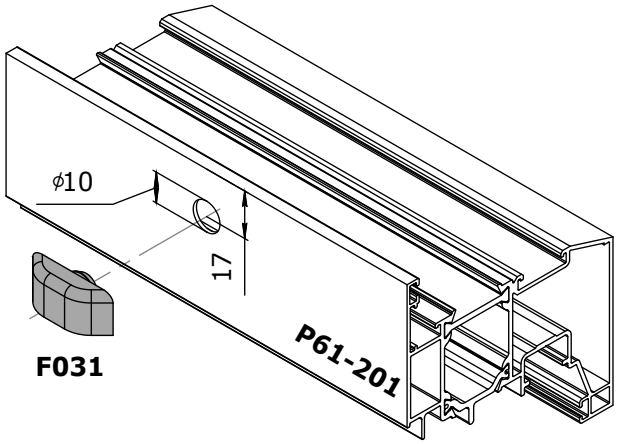

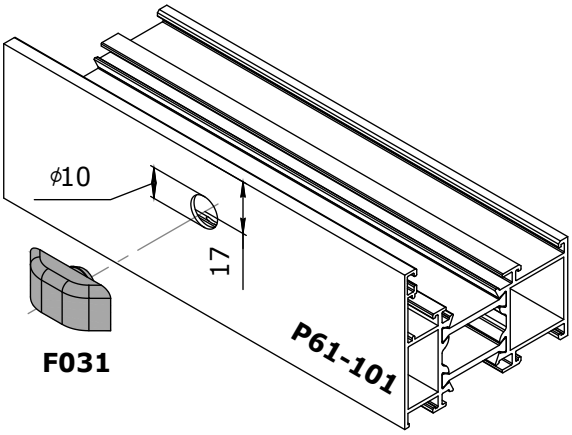

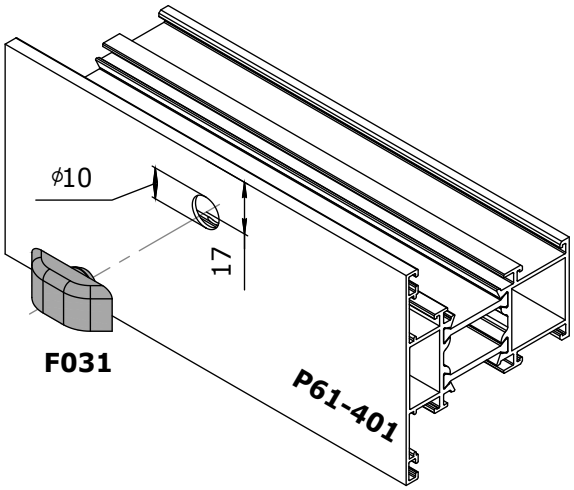

contents
profiles
delivery set
profiles (1:1)
sections
glazing tables
sub-assemblies tables
fitting arrangements
additional solutions
sub-assemblies
fire-resistant structures
connections
equipment and tools

Gaskets installation

All gaskets joined together shall be cut at a 45 degree angle and glued together at a joint using cyanoacrylate based adhesive.

The gaskets may not be cut at a 45 degree angle if special angled connecting gasket spacers (e.g. F068-2) are used. In this case, the gaskets shall be cut off at right angles.

Installation of medium window gasket R041.

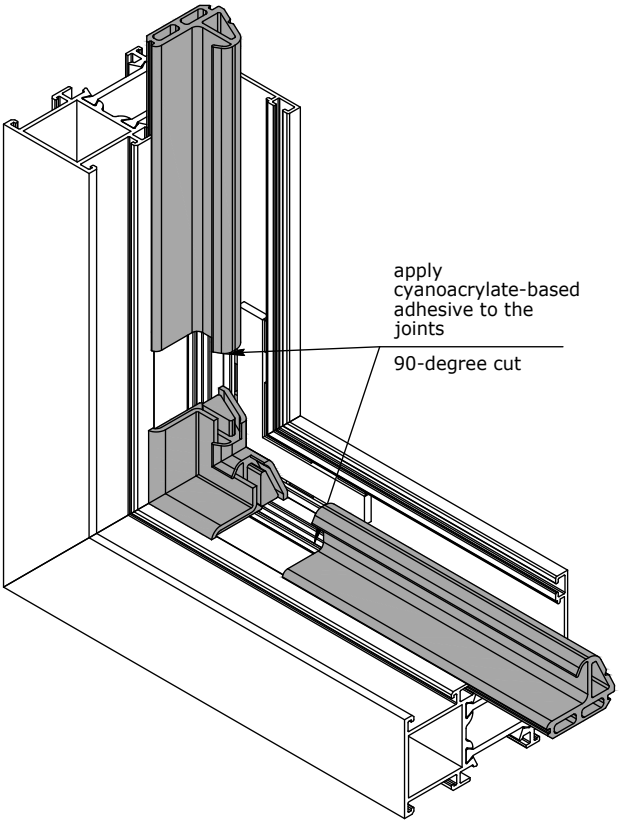

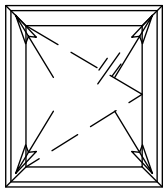

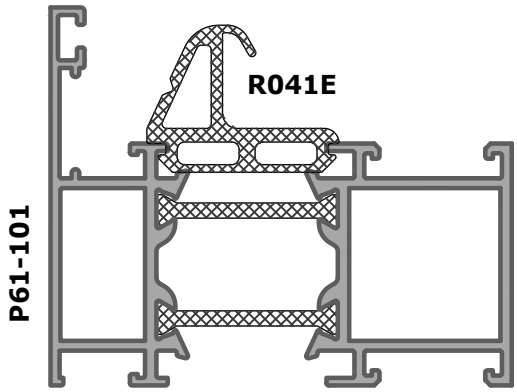

Installation of the external filling gasket R040.

The other external filling gaskets shall be installed in the same way.

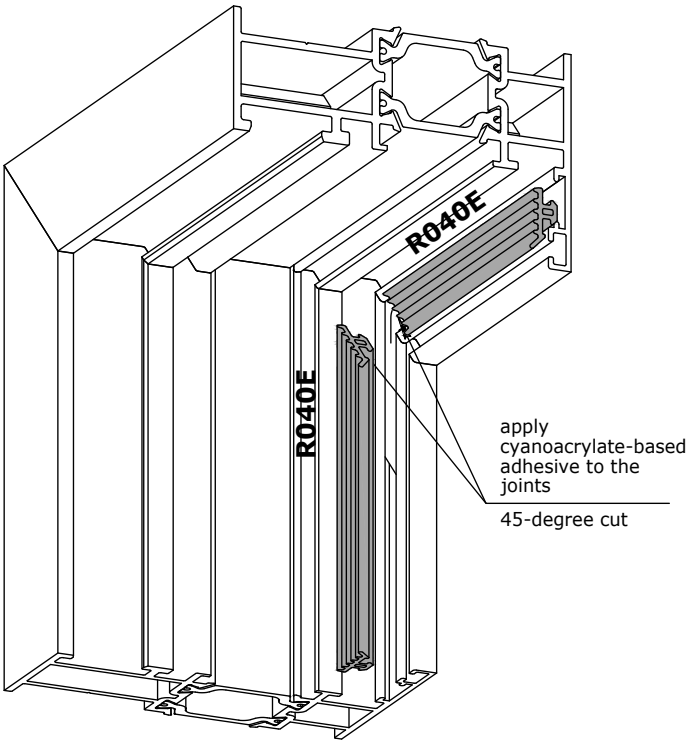

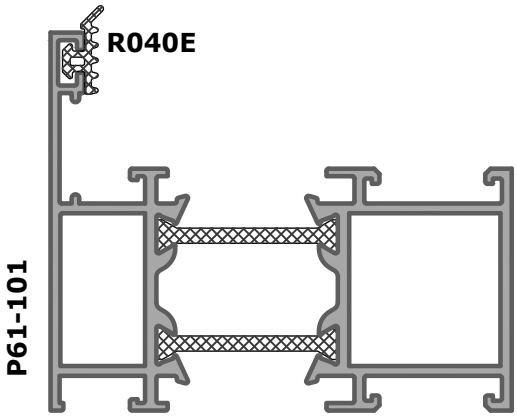

contents
profiles
delivery set
profiles (1:1)
sections
glazing tables
sub-assemblies tables
fitting arrangements
additional solutions
sub-assemblies
fire-resistant structures
connections
equipment and tools

Valve installation

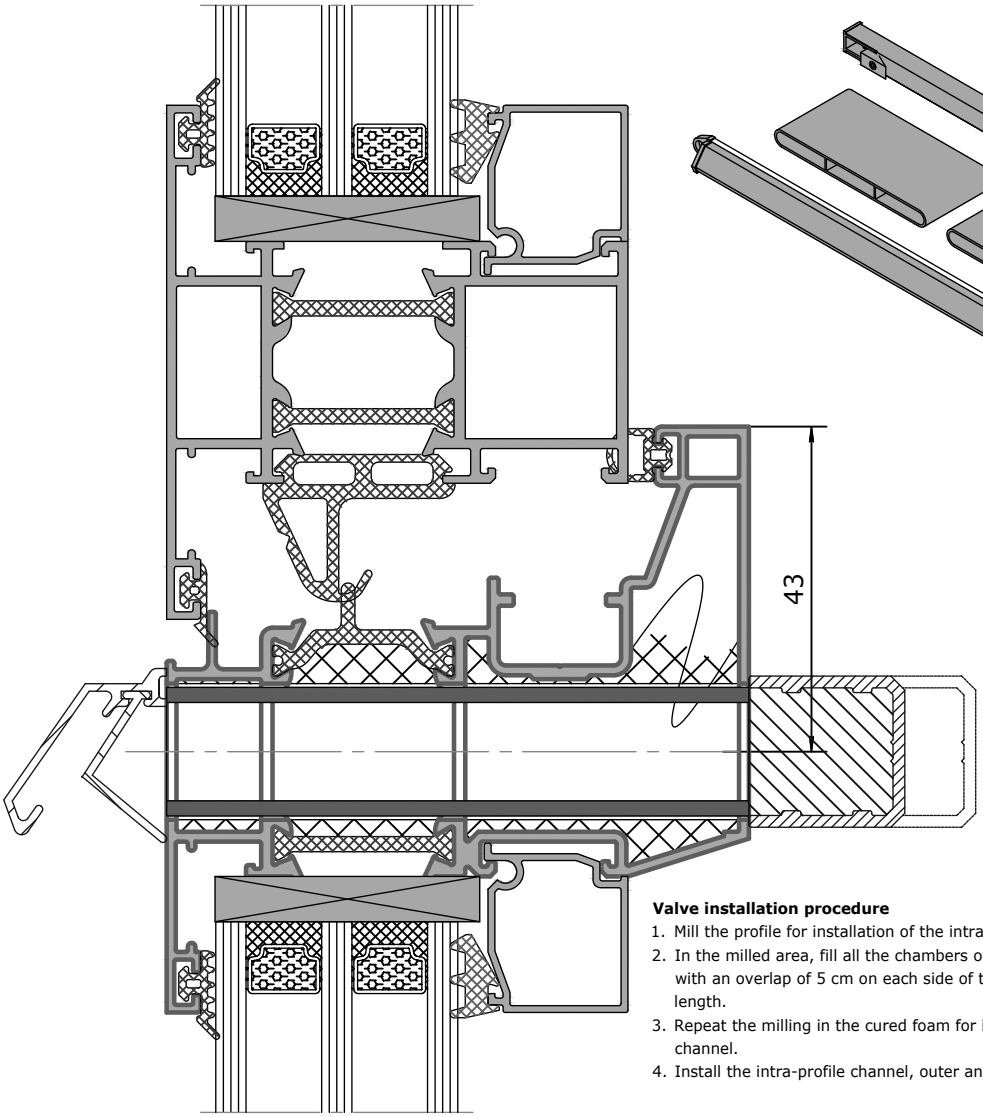

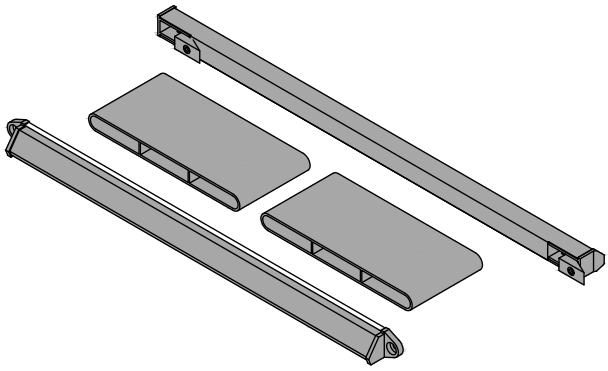

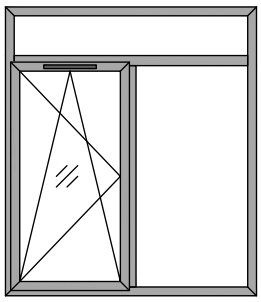

Valve installation procedure

1. Mill the profile for installation of the intra-profile channel of the valve.
2. In the milled area, fill all the chambers of the profile with mounting foam with an overlap of 5 cm on each side of the milled opening along the length.
3. Repeat the milling in the cured foam for installation of the intra-profile channel.
4. Install the intra-profile channel, outer and inner valve visors

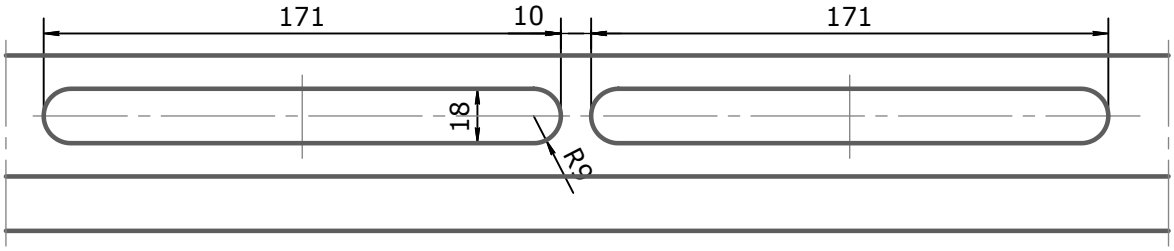

KL105

Manual aluminum air inlet valve (set)

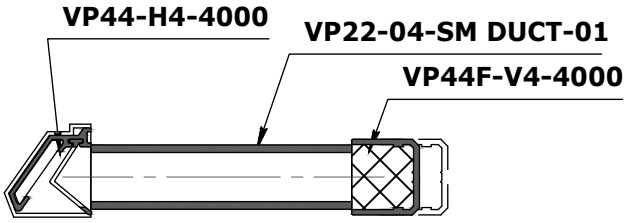

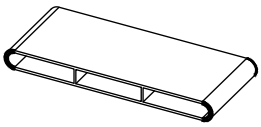

VP22-04-SM DUCT-01
duct 170 x 17 69 mm for air inlet valve

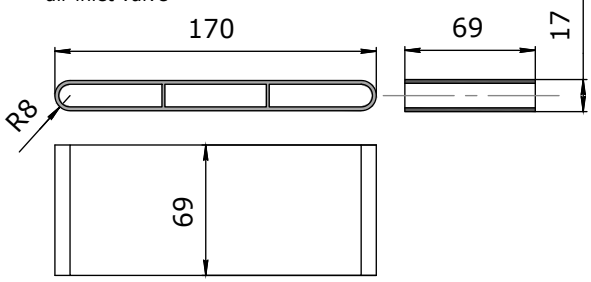

Kit components:
- **VP44F-V4-4000 —** aluminium body of window valve SM1200 — 1 pc
- **VP44-H4-4000 —** aluminium visor SM 1200 — 1 pc
- **VP22-04-SM DUCT-01 —** duct 170 x 16 69 mm for air inlet valve — 2 pcs

valve mounting hardware is included in the scope of delivery

contents
profiles
delivery set
profiles (1:1)
sections
glazing tables
sub-assemblies tables
fitting arrangements
additional solutions
sub-assemblies
fire-resistant structures
connections
equipment and tools

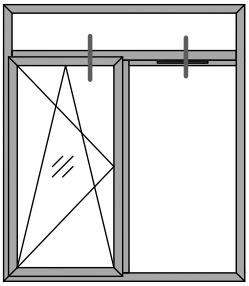

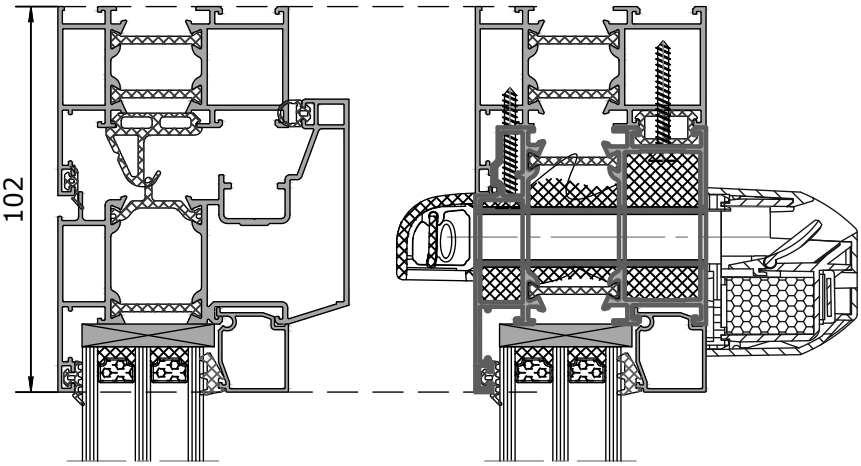

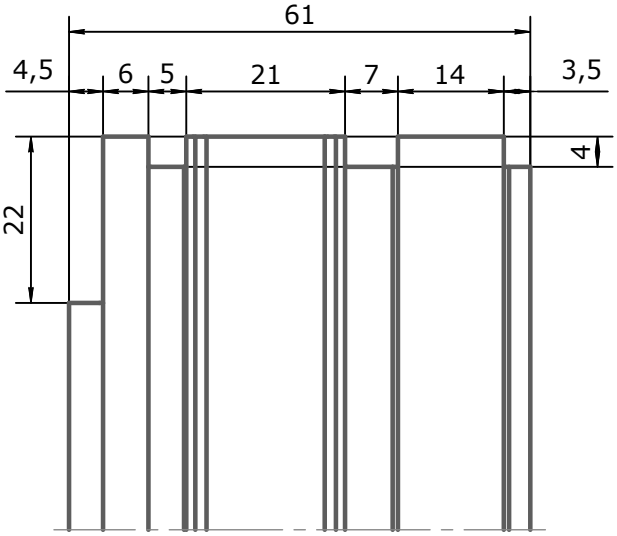

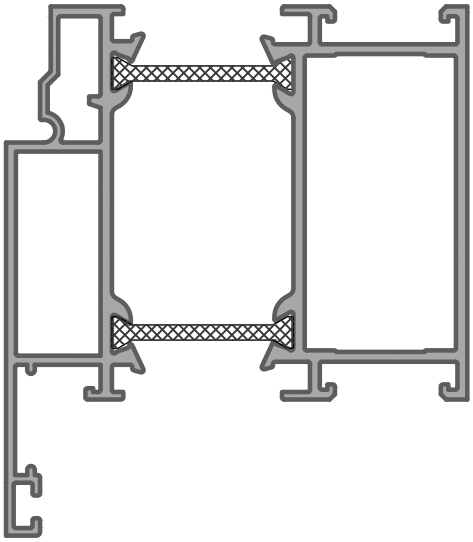

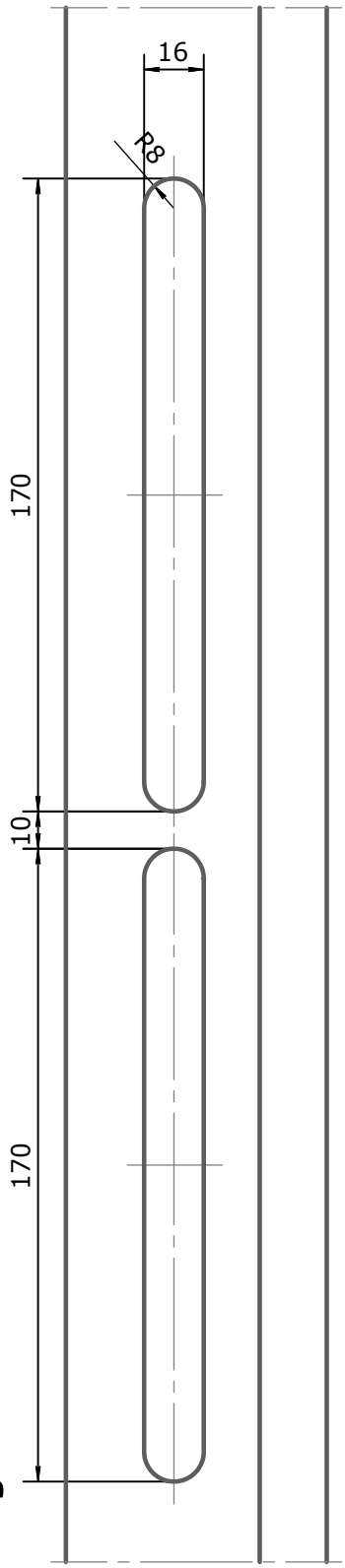

profile P61-404 machining

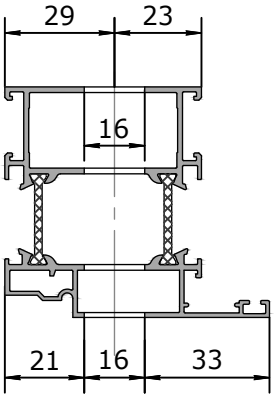

contents
profiles
delivery set
profiles (1:1)
sections
glazing tables
sub-assemblies tables
fitting arrangements
additional solutions
sub-assemblies
fire-resistant structures
connections
equipment and tools

Installation of fittings: latch (gear) and handle

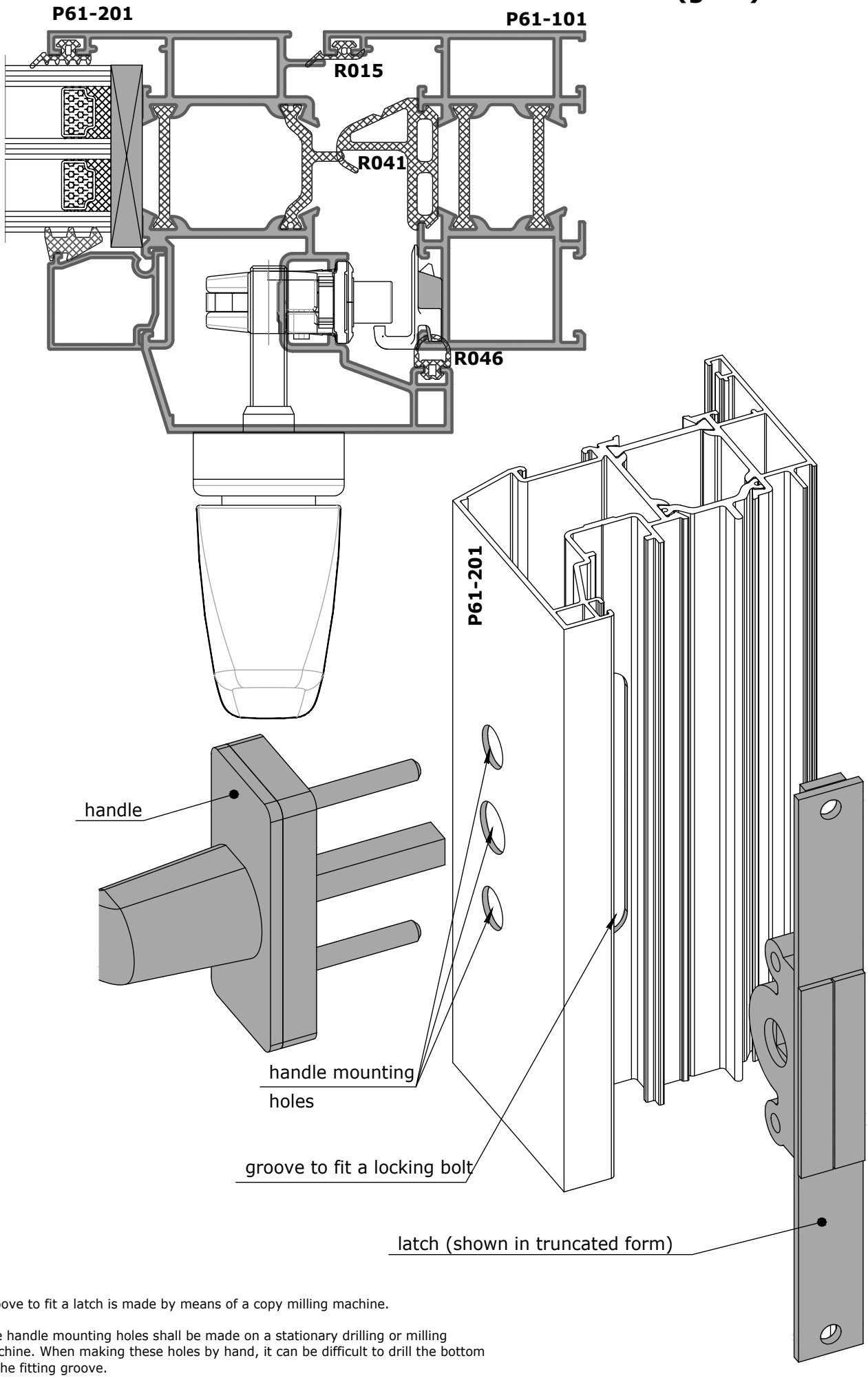

Groove to fit a latch is made by means of a copy milling machine.

The handle mounting holes shall be made on a stationary drilling or milling machine. When making these holes by hand, it can be difficult to drill the bottom of the fitting groove.

contents
profiles
delivery set
profiles (1:1)
sections
glazing tables
sub-assemblies tables
fitting arrangements
additional solutions
sub-assemblies
fire-resistant structures
connections
equipment and tools

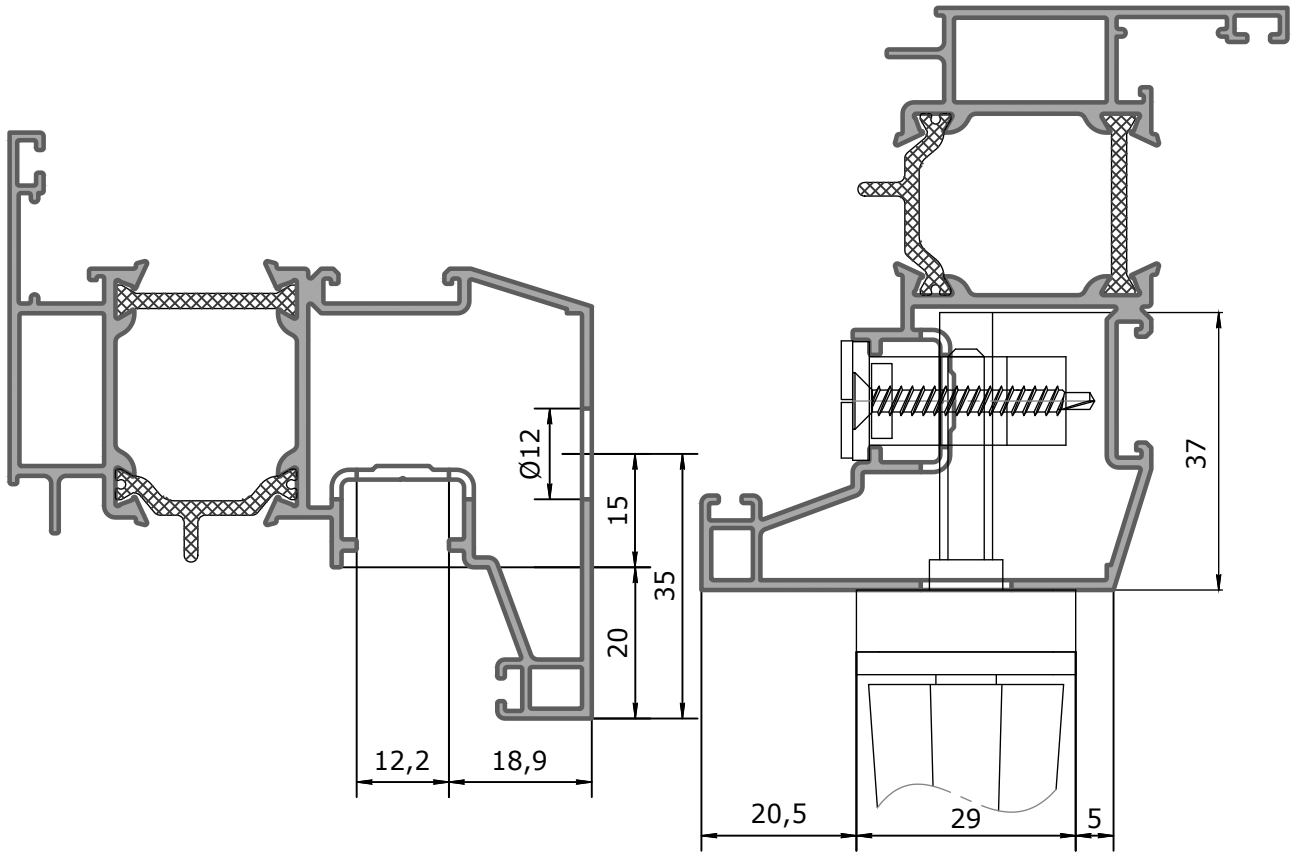

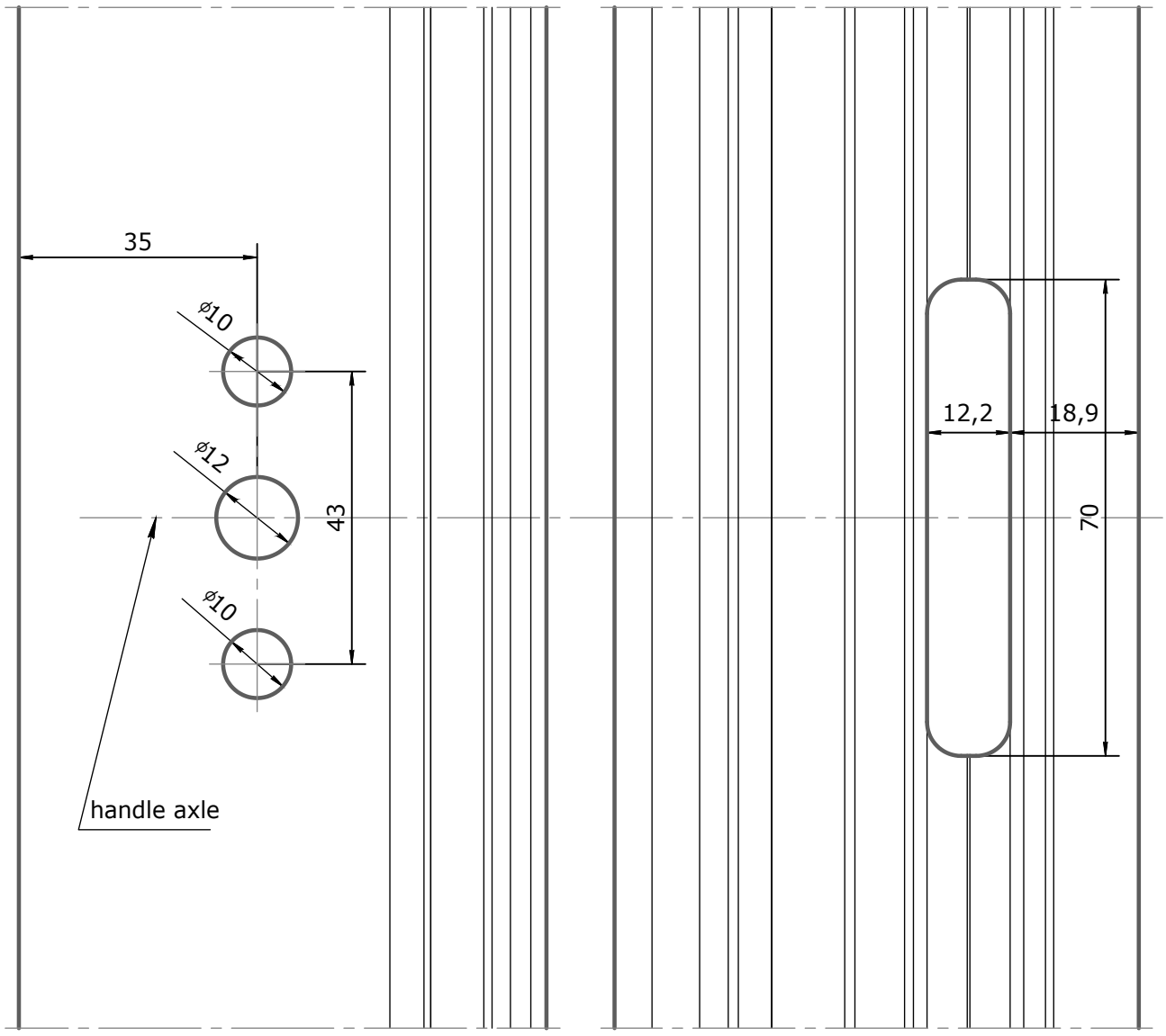

contents
profiles
delivery set
profiles (1:1)
sections
glazing tables
sub-assemblies tables
fitting arrangements
additional solutions
sub-assemblies
fire-resistant structures
connections
equipment and tools

contents
profiles
delivery set
profiles (1:1)
sections
glazing tables
sub-assemblies tables
fitting arrangements
additional solutions
sub-assemblies
fire-resistant structures
connections
equipment and tools

Doors. Hinge installation

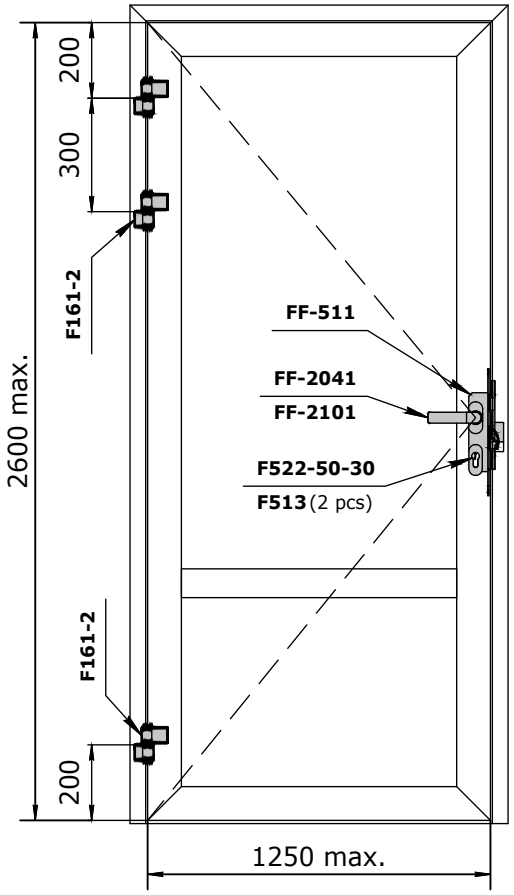

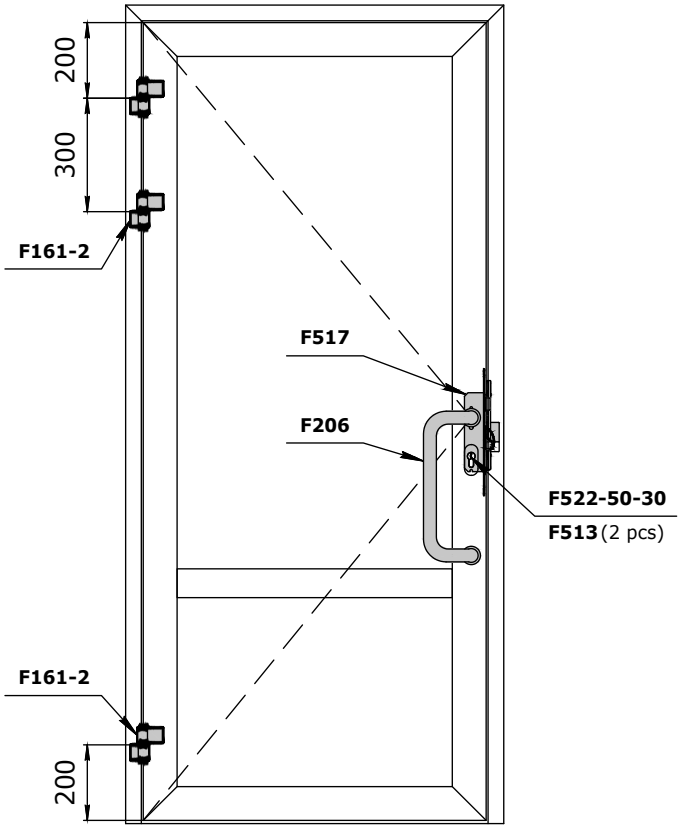

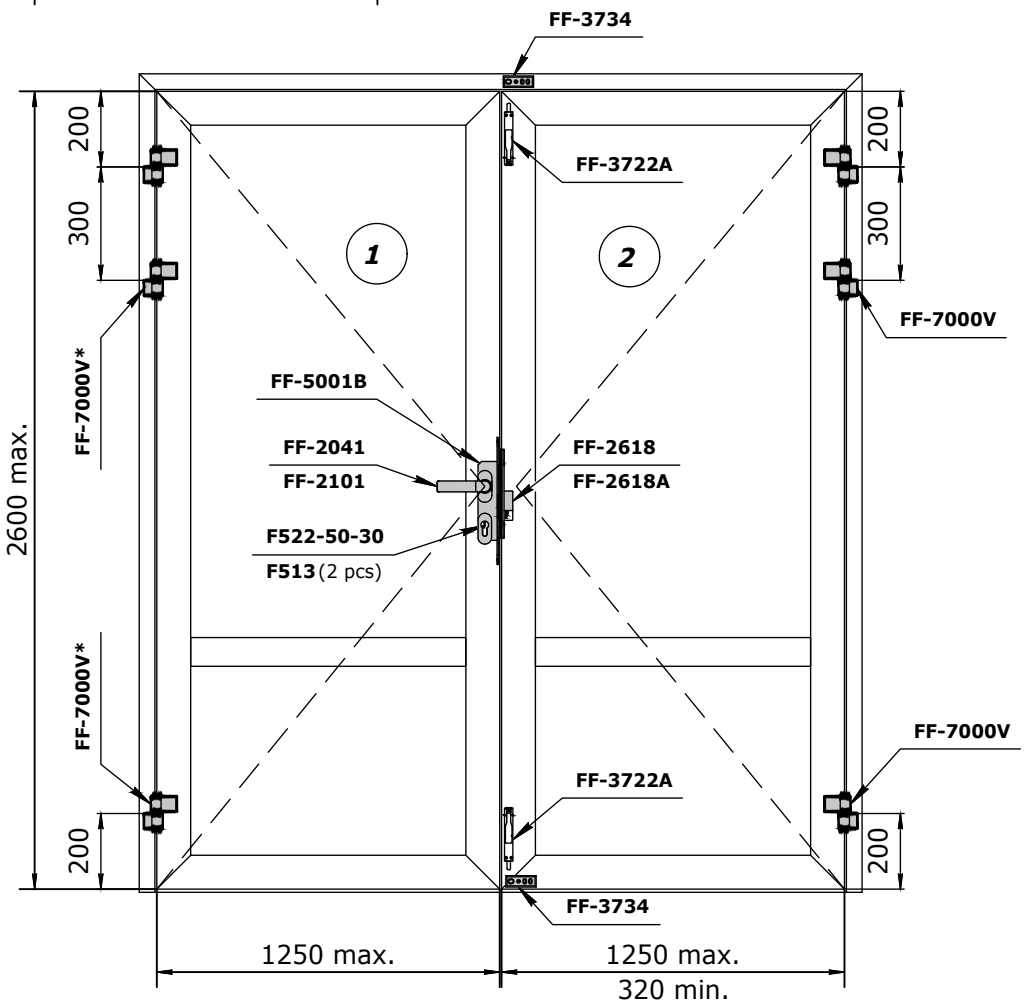

contents
profiles
delivery set
profiles (1:1)
sections
glazing tables
sub-assemblies tables
fitting arrangements
additional solutions
sub-assemblies
fire-resistant structures
connections
equipment and tools

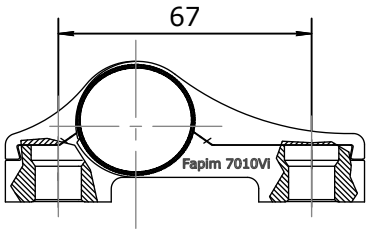

F161-2

2-section flap hinge with center-to-center distance of 67 mm for anchor **F152** (4 pcs)

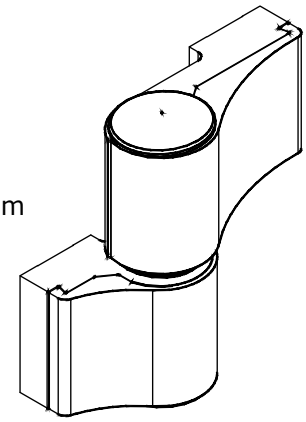

Doors for residential buildings	Doors for public buildings	Doors for public buildings with door closer	Doors for public buildings with door closer and opening brake

2 hinges

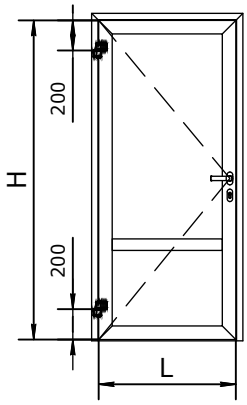

MAX. 160 kg

H \ L	≤800	900	1000	1100	1200	1250
2600	160	160	160	160	160	160
2500	160	160	160	160	160	148
2400	160	160	160	160	160	136
2300	160	160	160	160	147	124
2200	160	160	160	160	134	111
2100	160	160	160	146	120	99
2000	160	160	160	131	107	87

3 hinges

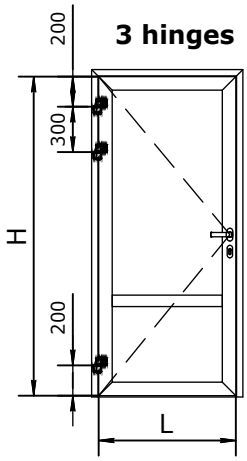

MAX. 185 kg

H \ L	≤800	900	1000	1100	1200	1250
2600	185	185	185	185	185	185
2500	185	185	185	185	185	171
2400	185	185	185	185	185	157
2300	185	185	185	185	170	143
2200	185	185	185	185	155	129
2100	185	185	185	169	139	114
2000	185	185	185	152	124	100

4 hinges

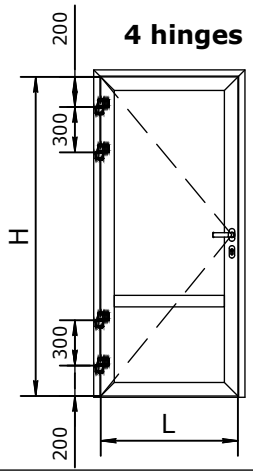

MAX. 200 kg

H \ L	≤800	900	1000	1100	1200	1250
2600	200	200	200	200	200	200
2500	200	200	200	200	200	185
2400	200	200	200	200	200	170
2300	200	200	200	200	184	154
2200	200	200	200	200	167	139
2100	200	200	200	182	150	124
2000	200	200	200	164	134	108

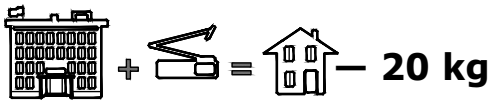

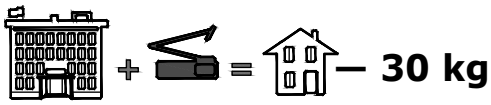

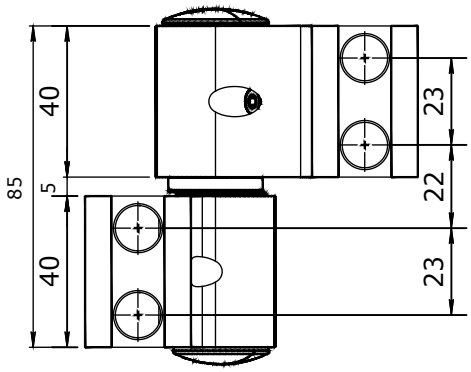

contents
profiles
delivery set
profiles (1:1)
sections
glazing tables
sub-assemblies tables
fitting arrangements
additional solutions
sub-assemblies
fire-resistant structures
connections
equipment and tools

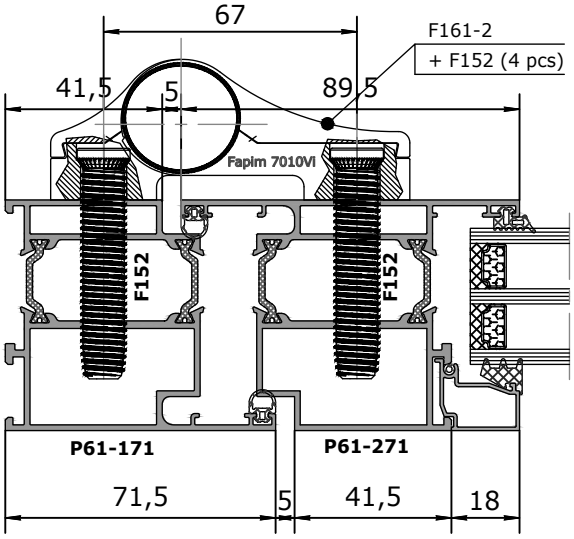

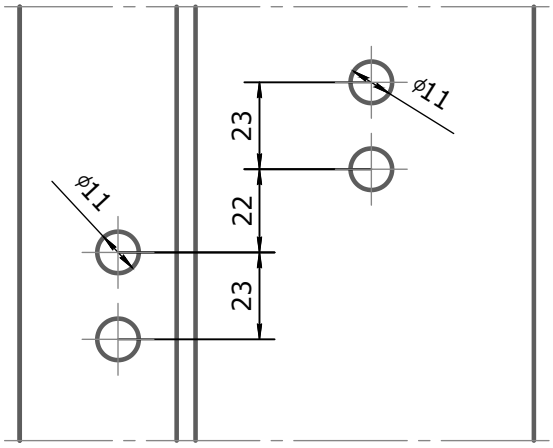

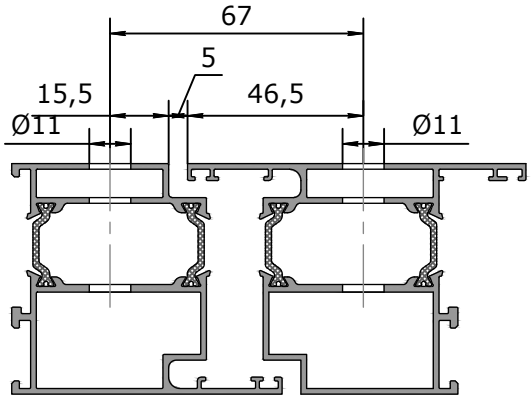

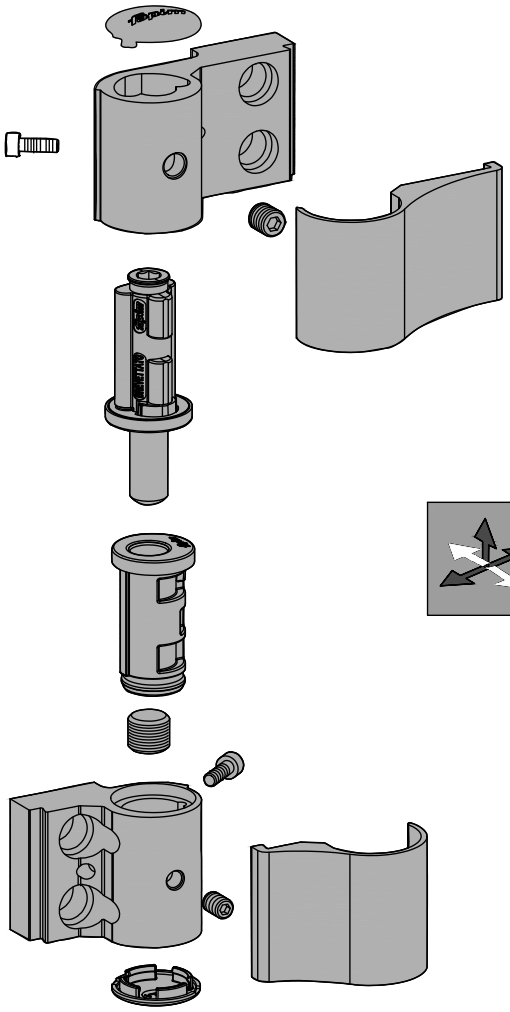

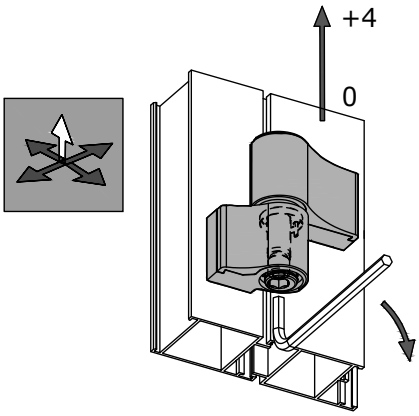

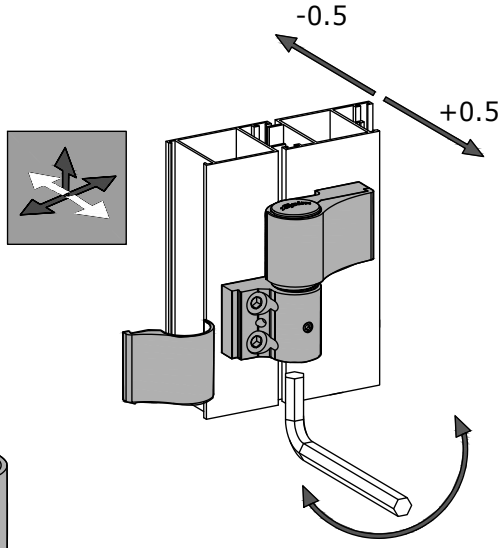

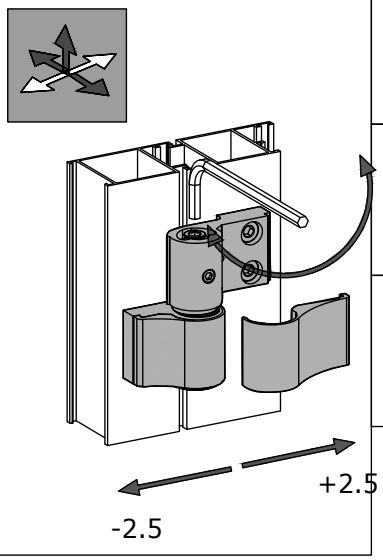

contents
profiles
delivery set
profiles (1:1)
sections
glazing tables
sub-assemblies tables
fitting arrangements
additional solutions
sub-assemblies
fire-resistant structures
connections
equipment and tools

Doors. Lock installation

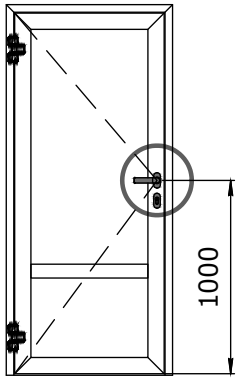

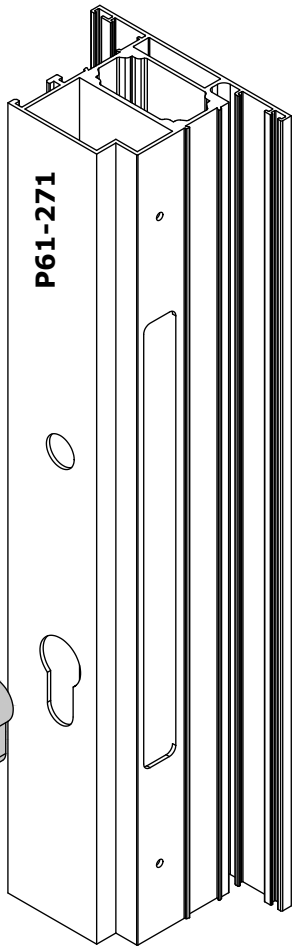

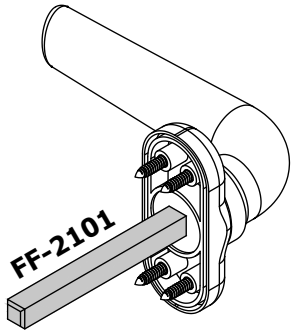

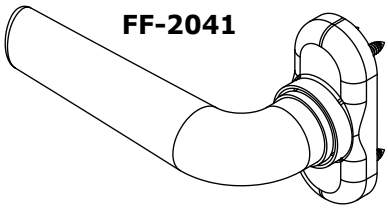

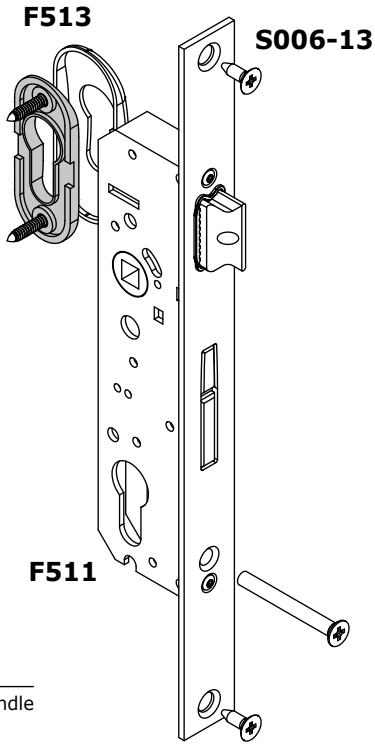

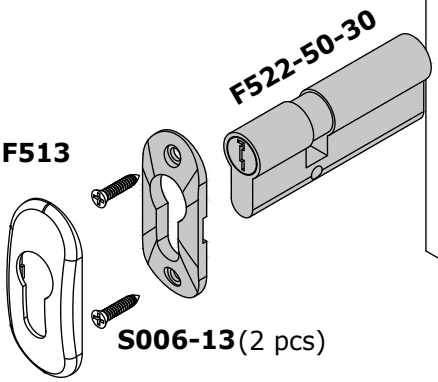

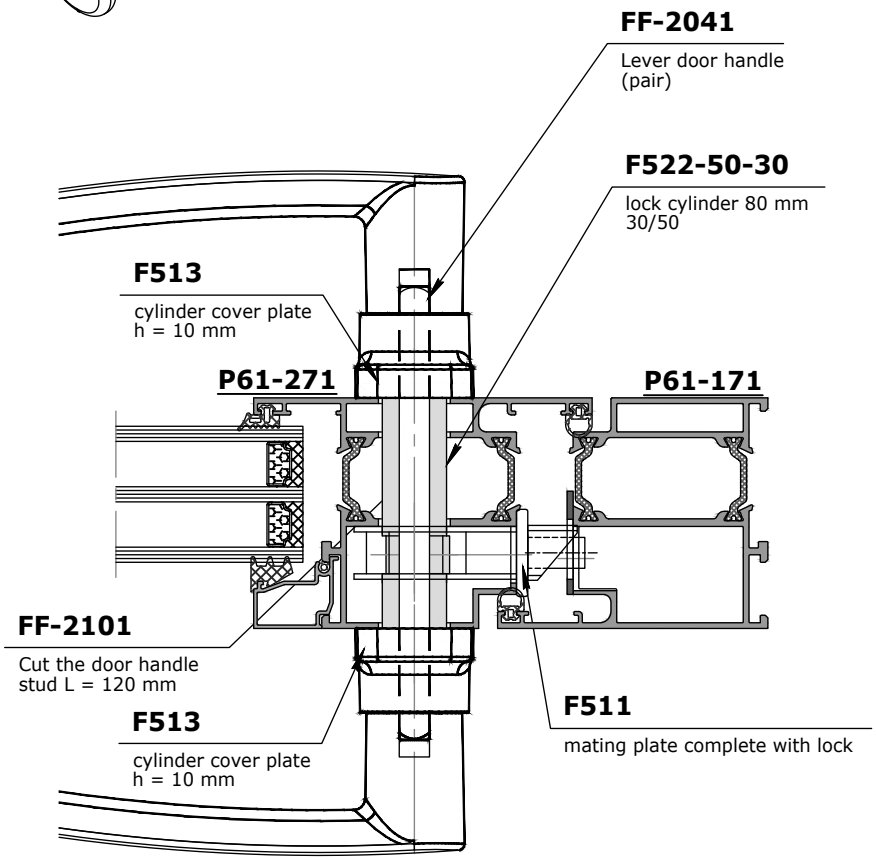

contents
profiles
delivery set
profiles (1:1)
sections
glazing tables
sub-assemblies tables
fitting arrangements
additional solutions
sub-assemblies
fire-resistant structures
connections
equipment and tools

Machining: door lock with center-to-center distance of 85 mm, backset of 30 mm

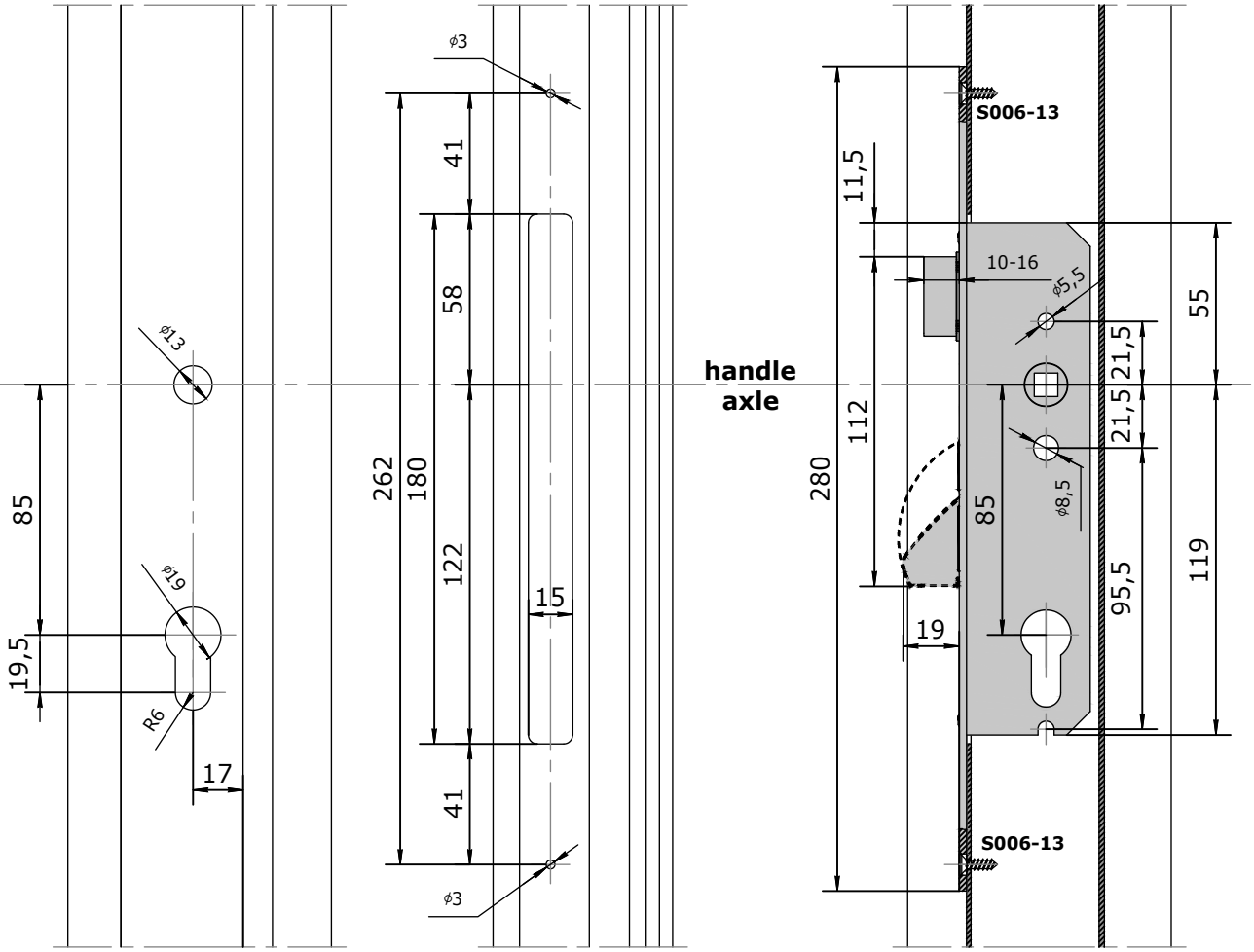

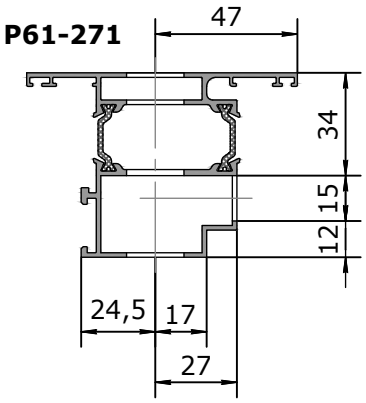

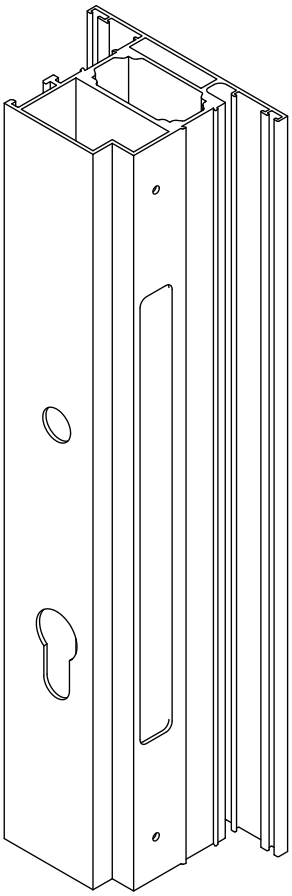

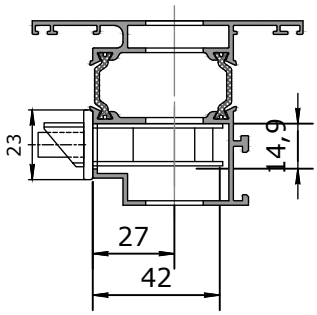

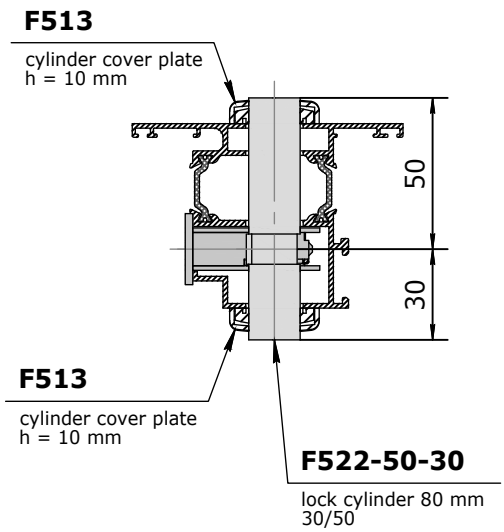

contents
profiles
delivery set
profiles (1:1)
sections
glazing tables
sub-assemblies tables
fitting arrangements
additional solutions
sub-assemblies
fire-resistant structures
connections
equipment and tools

E15...EIW60

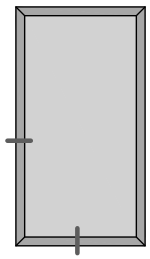

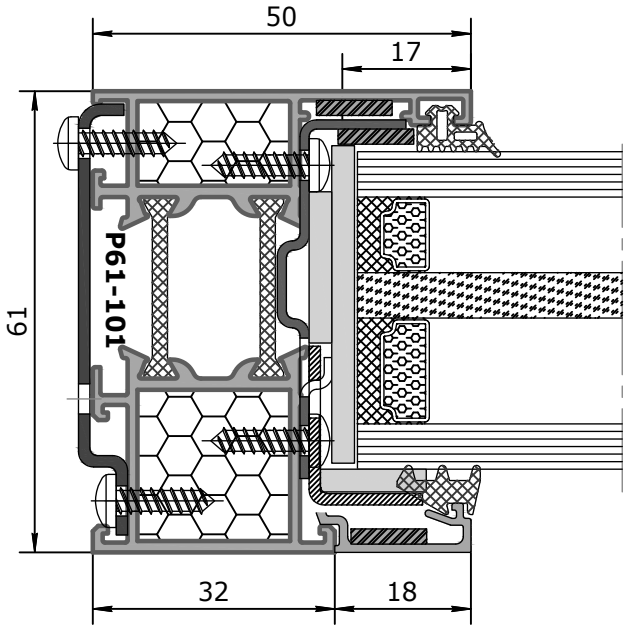

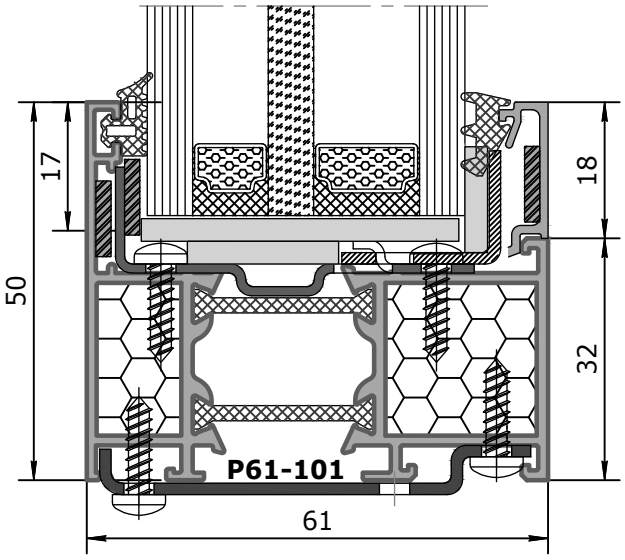

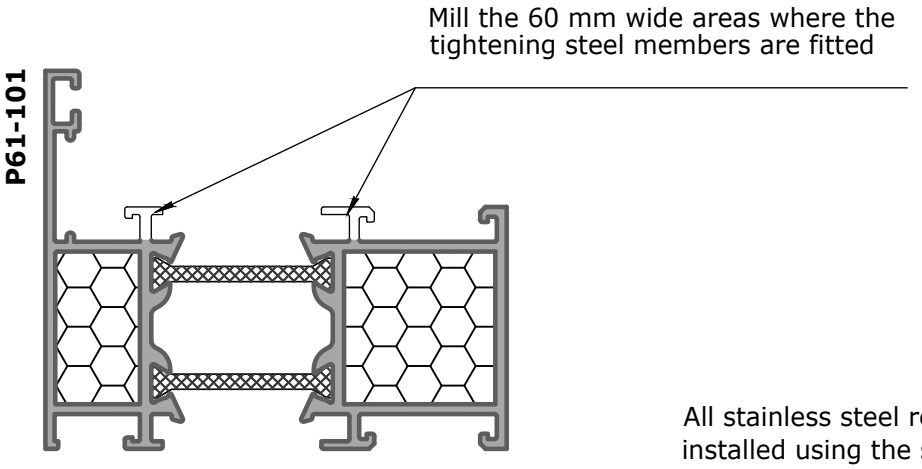

All stainless steel retainers shall be installed using the stainless self-tapping screws **S002**

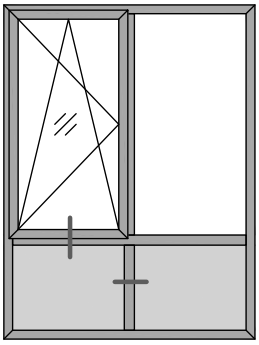

E15...EIW60

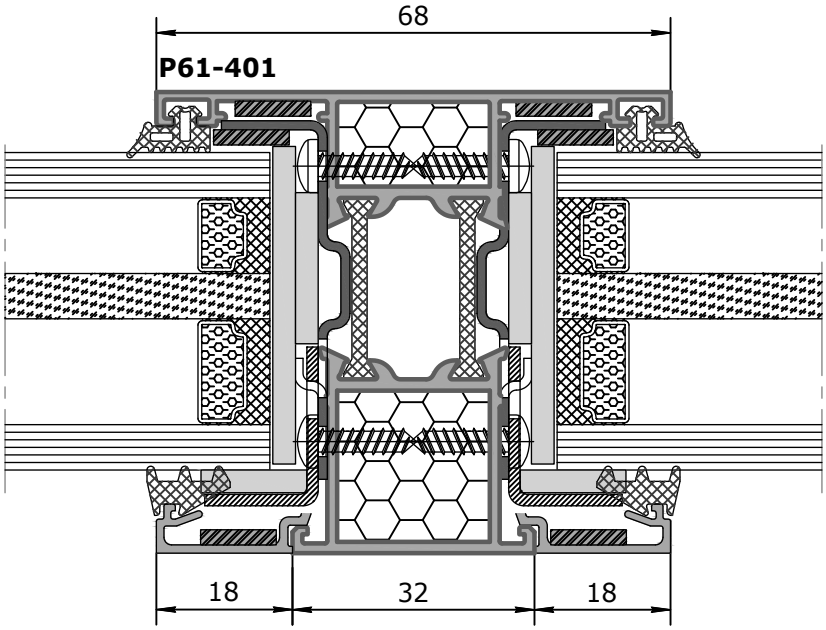

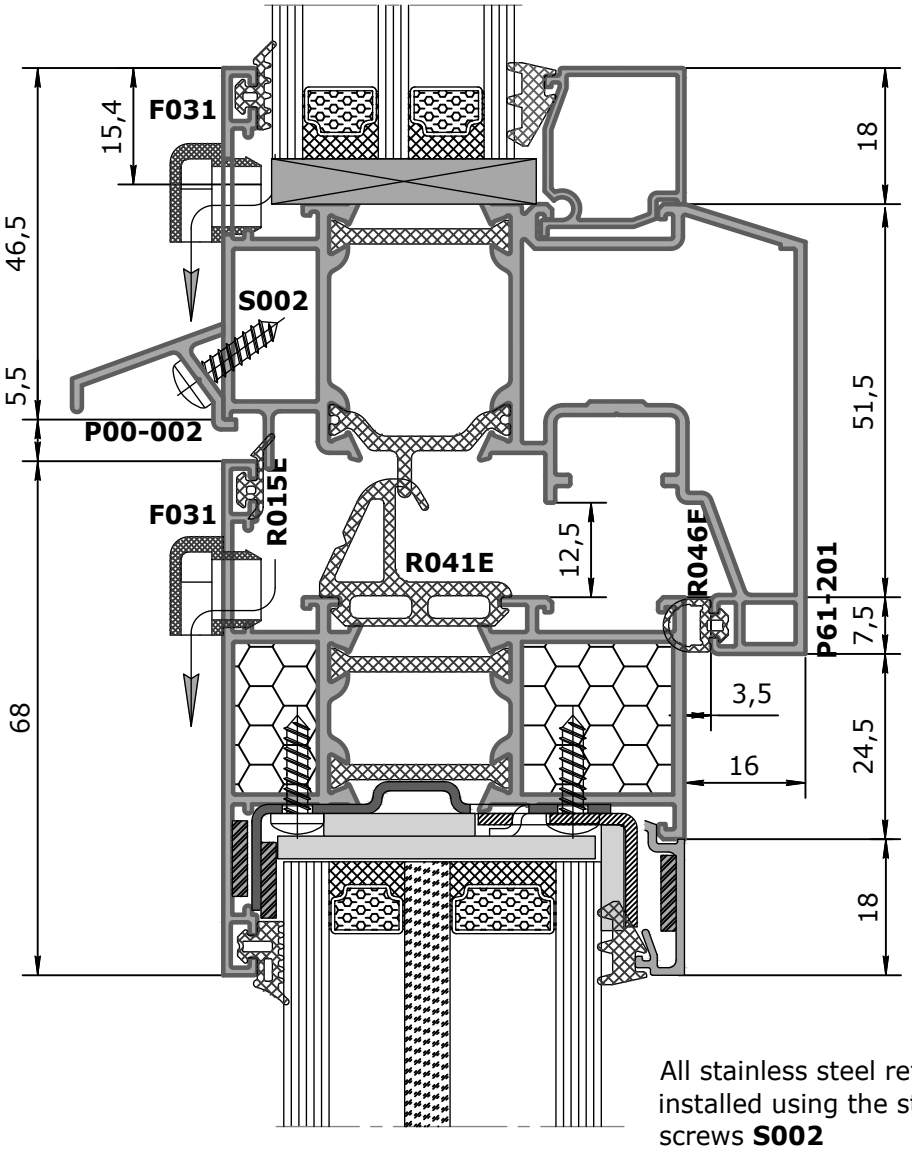

All stainless steel retainers shall be installed using the stainless self-tapping screws **S002**

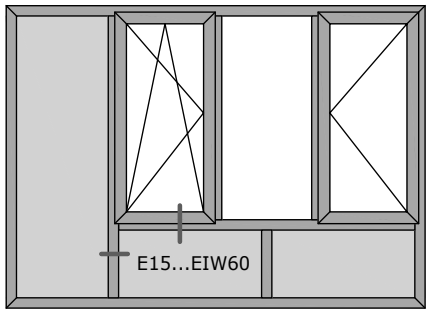

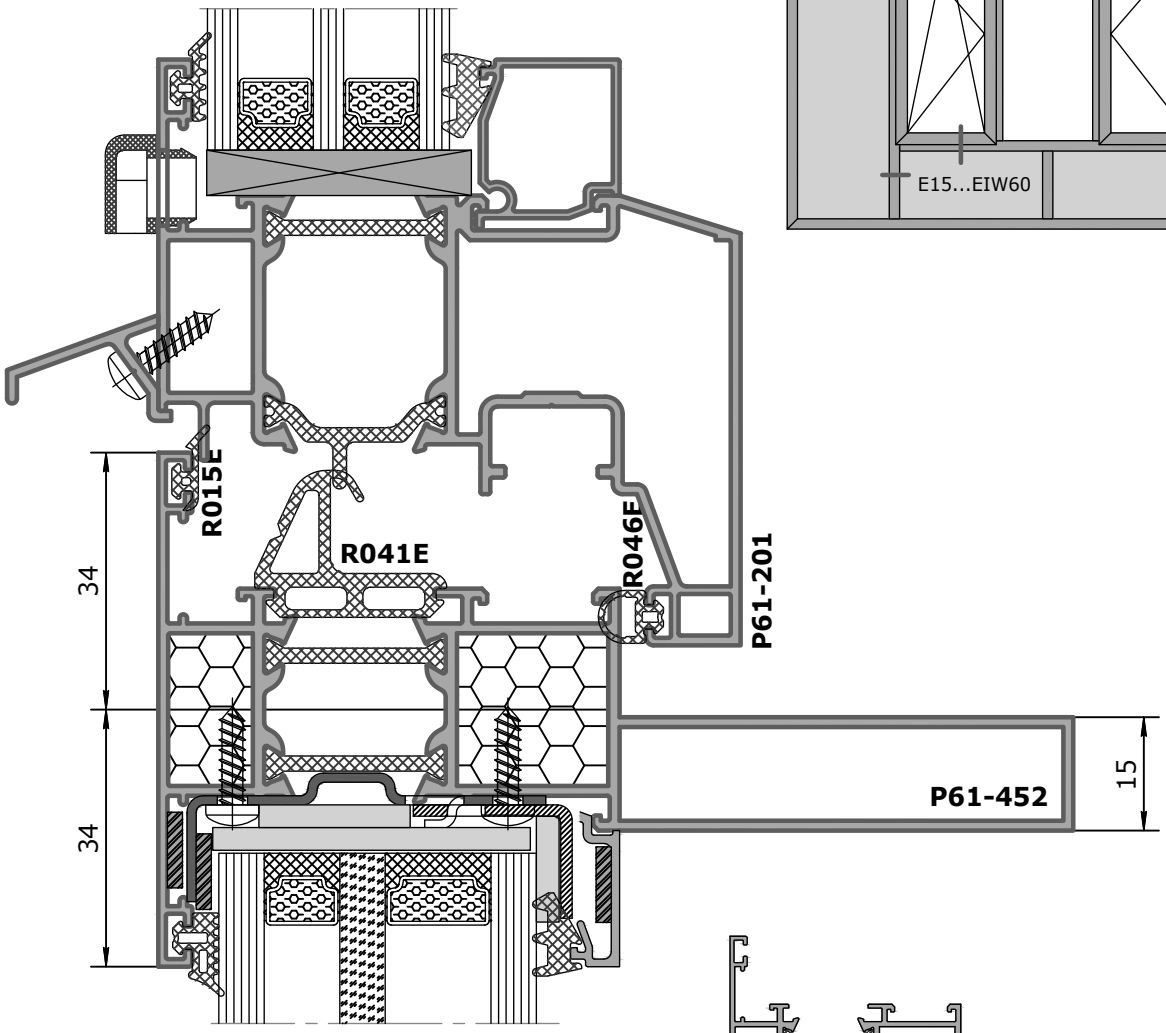

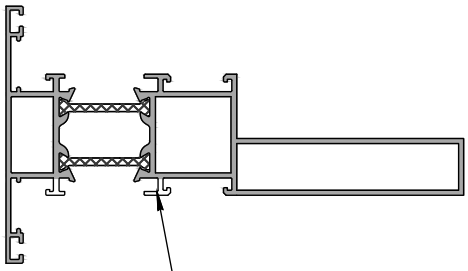

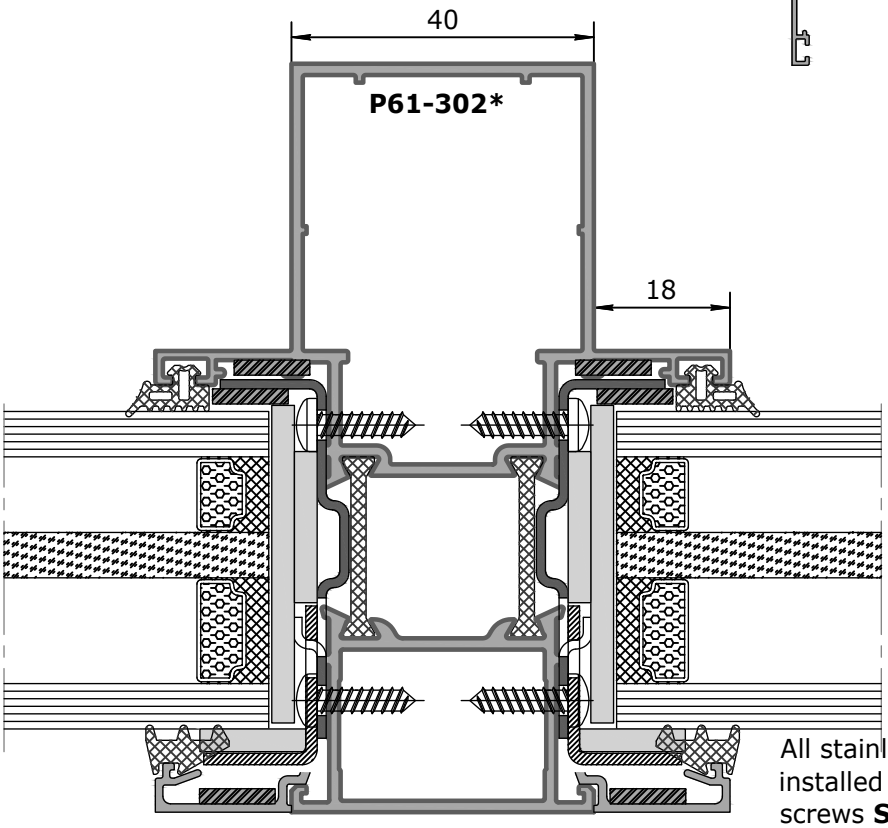

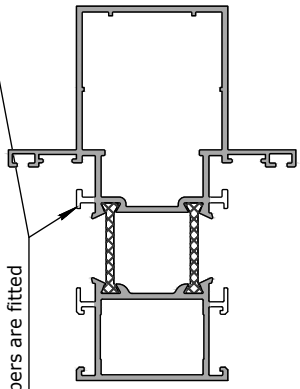

Mill the 60 mm wide areas where the tightening steel members are fitted

All stainless steel retainers shall be installed using the stainless self-tapping screws **S002**

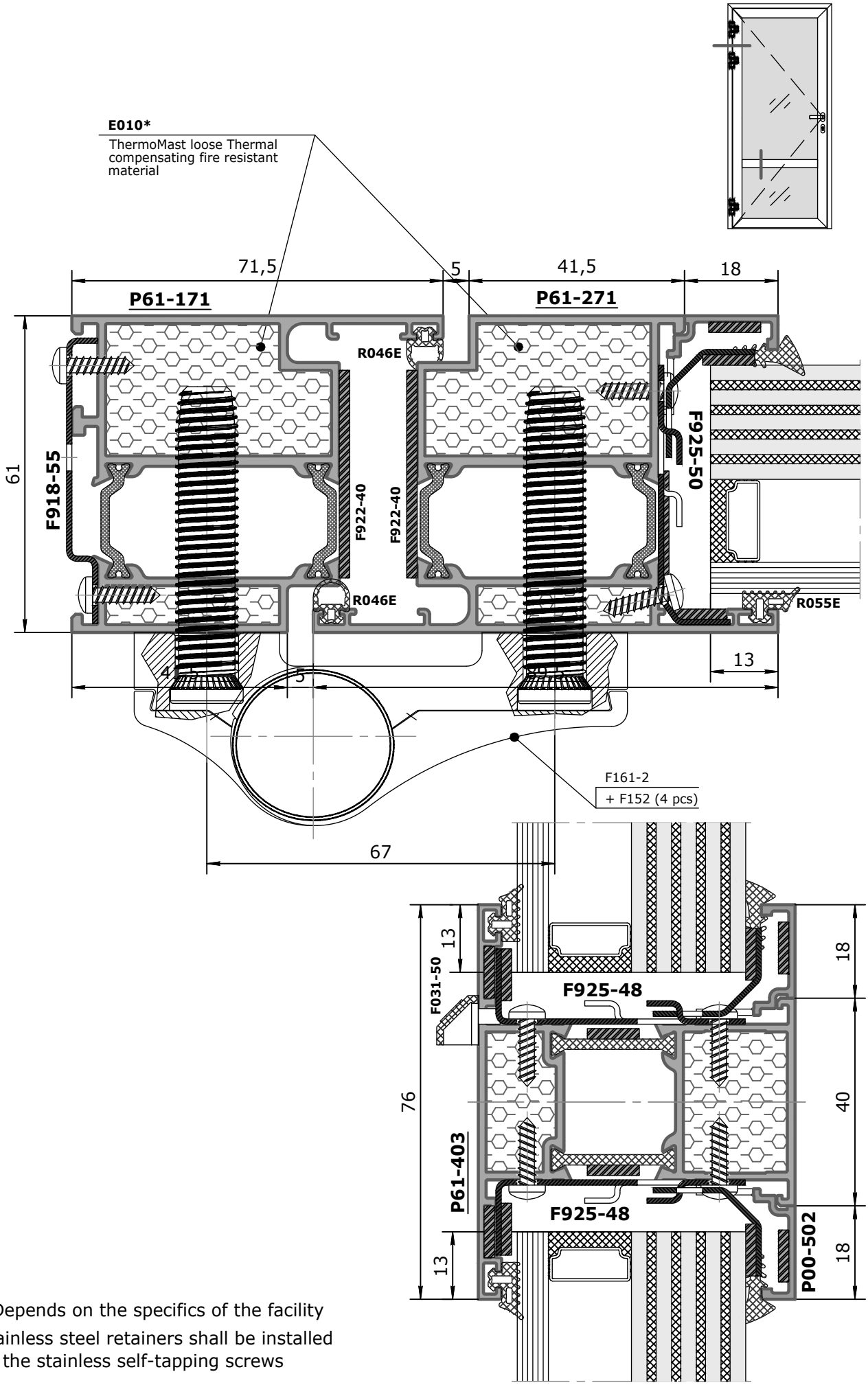

* — Depends on the specifics of the facility

All stainless steel retainers shall be installed using the stainless self-tapping screws **S002**

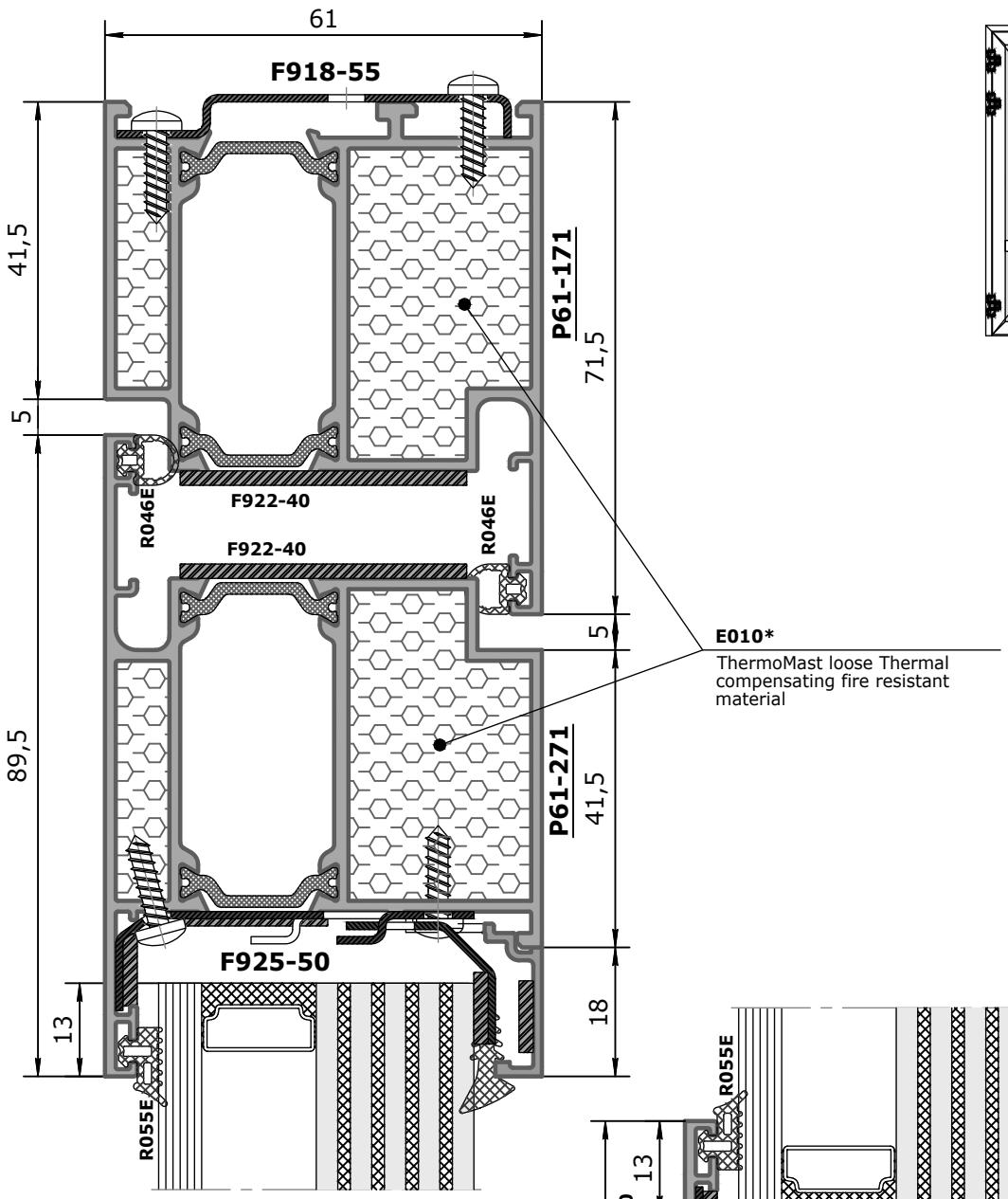

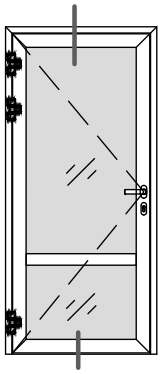

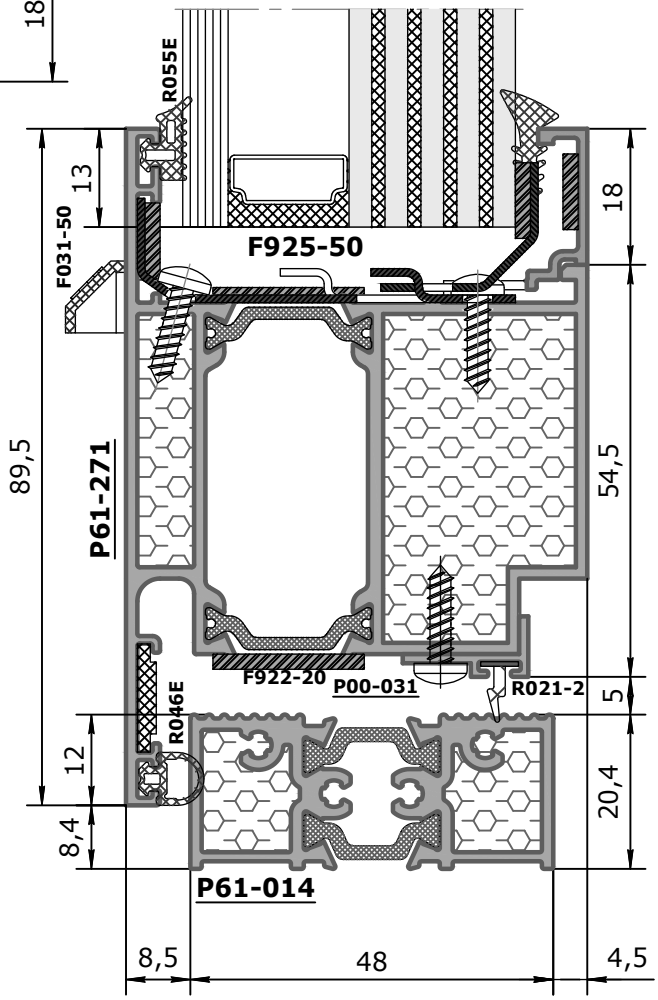

* — Depends on the specifics of the facility

All stainless steel retainers and supplementary aluminium profiles shall be installed using the stainless self-tapping screws **S002**.

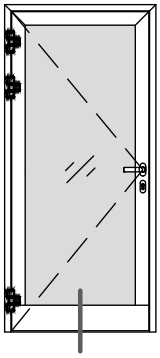

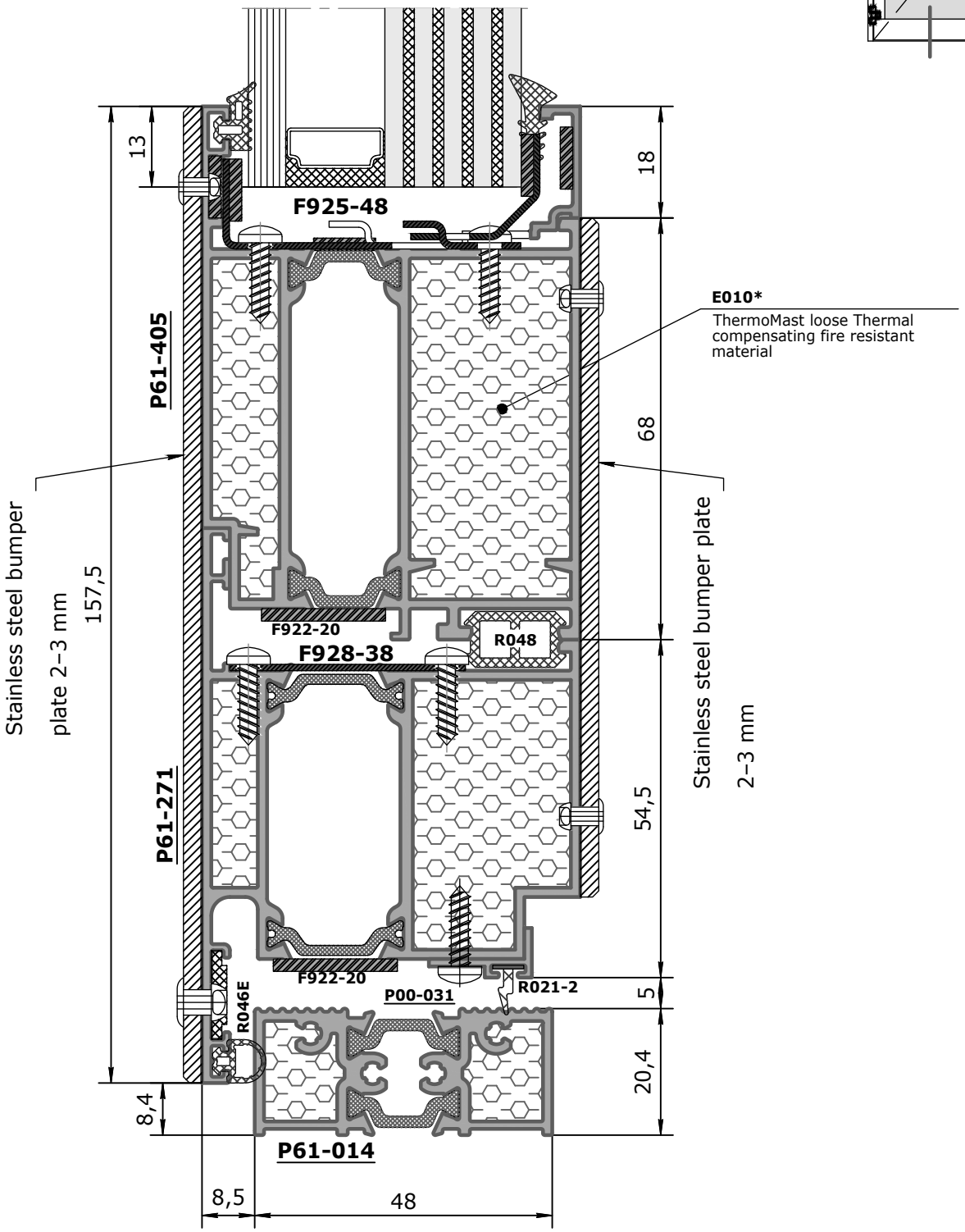

* — Depends on the specifics of the facility

All stainless steel retainers and supplementary aluminium profiles shall be installed using the stainless self-tapping screws **S002**

The bumper plate is fastened using 3 x 10 stainless steel/stainless steel brakestem rivets

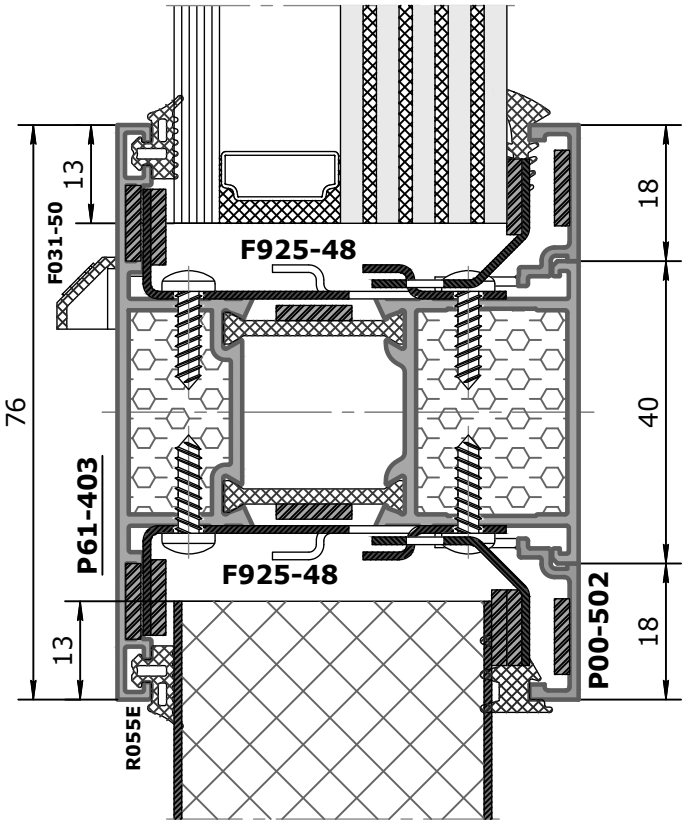

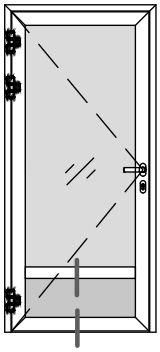

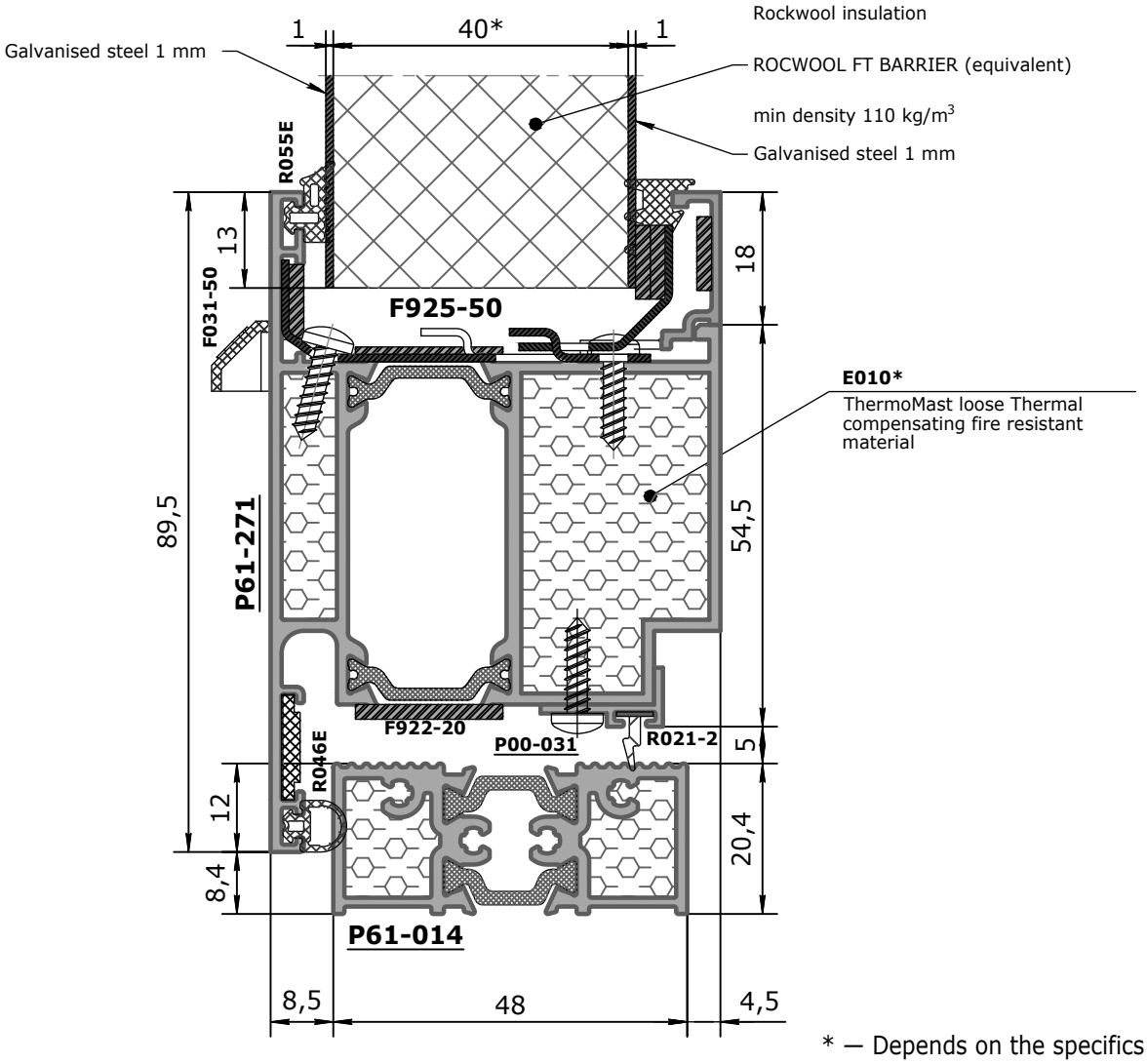

* — Depends on the specifics of the facility

All stainless steel retainers and supplementary aluminium profiles shall be installed using the stainless self-tapping screws **S002**

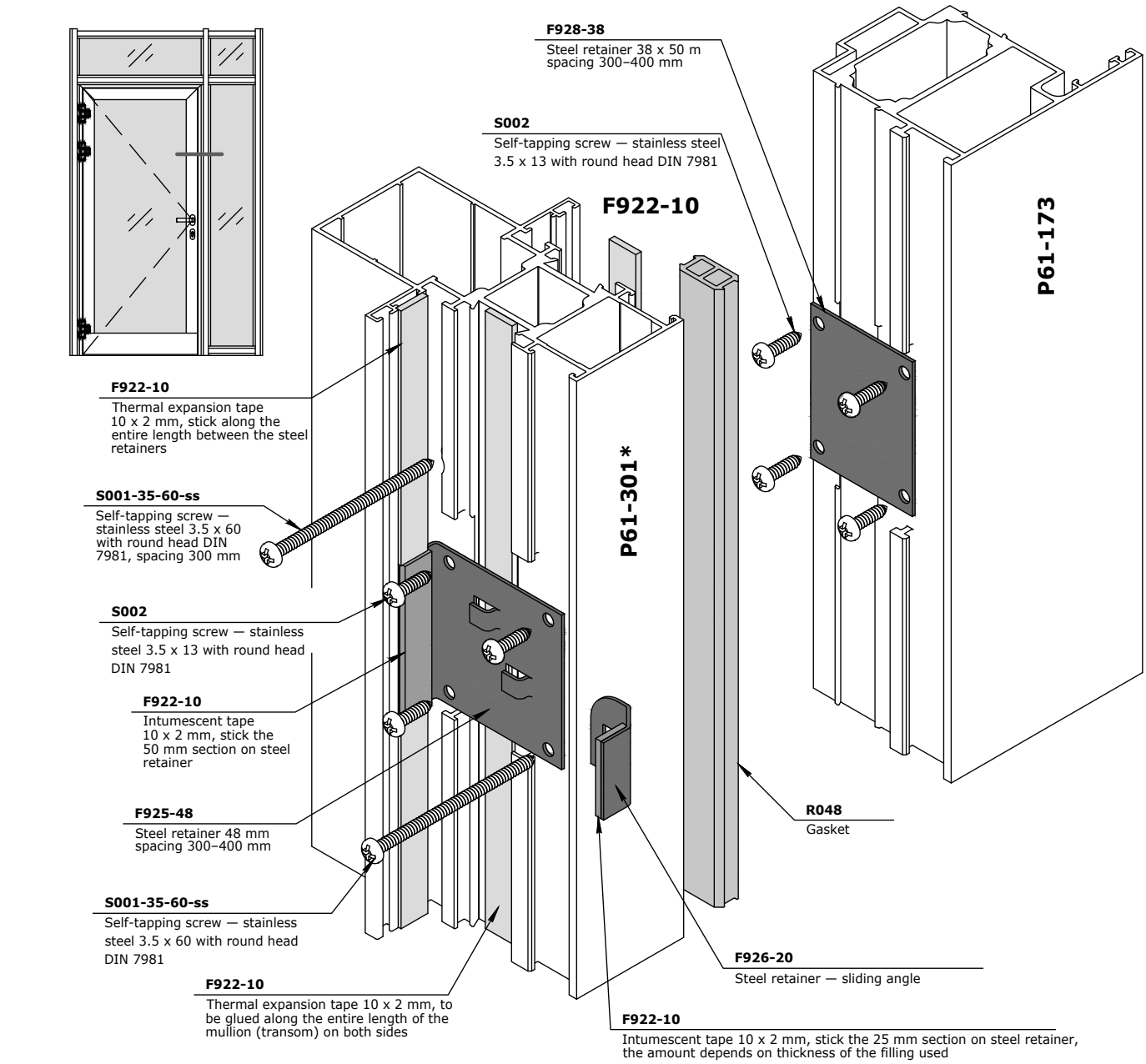
F928-38
Steel retainer 38 x 50 m spacing 300–400 mm
S002
Self-tapping screw — stainless steel 3.5 x 13 with round head DIN 7981
F922-10
P61-173
F922-10
Thermal expansion tape 10 x 2 mm, stick along the entire length between the steel retainers
P61-301*
S001-35-60-ss
Self-tapping screw — stainless steel 3.5 x 60 with round head DIN 7981, spacing 300 mm
S002
Self-tapping screw — stainless steel 3.5 x 13 with round head DIN 7981
F922-10
Intumescent tape 10 x 2 mm, stick the 50 mm section on steel retainer
F925-48
Steel retainer 48 mm spacing 300–400 mm
R048
Gasket
S001-35-60-ss
Self-tapping screw — stainless steel 3.5 x 60 with round head DIN 7981
F926-20
Steel retainer — sliding angle
F922-10
Thermal expansion tape 10 x 2 mm, to be glued along the entire length of the mullion (transom) on both sides
F922-10
Intumescent tape 10 x 2 mm, stick the 25 mm section on steel retainer, the amount depends on thickness of the filling used

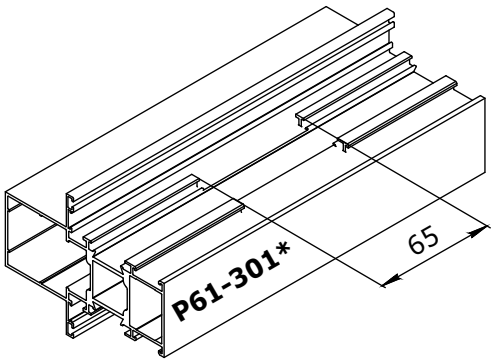
P61-301*
65

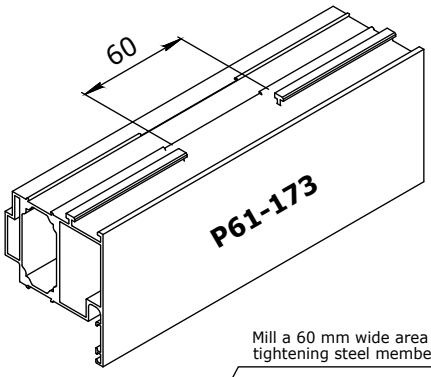
60
P61-173

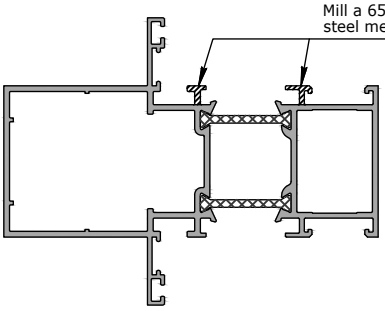
Mill a 65 mm wide area where the tightening steel members are fitted

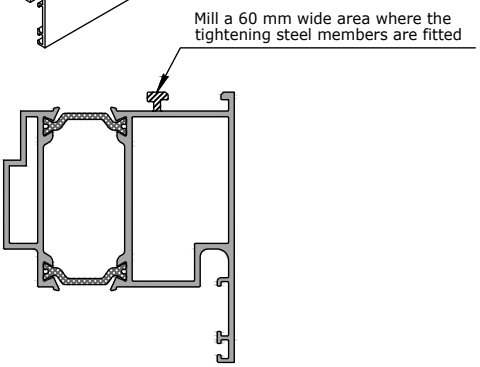
Mill a 60 mm wide area where the tightening steel members are fitted

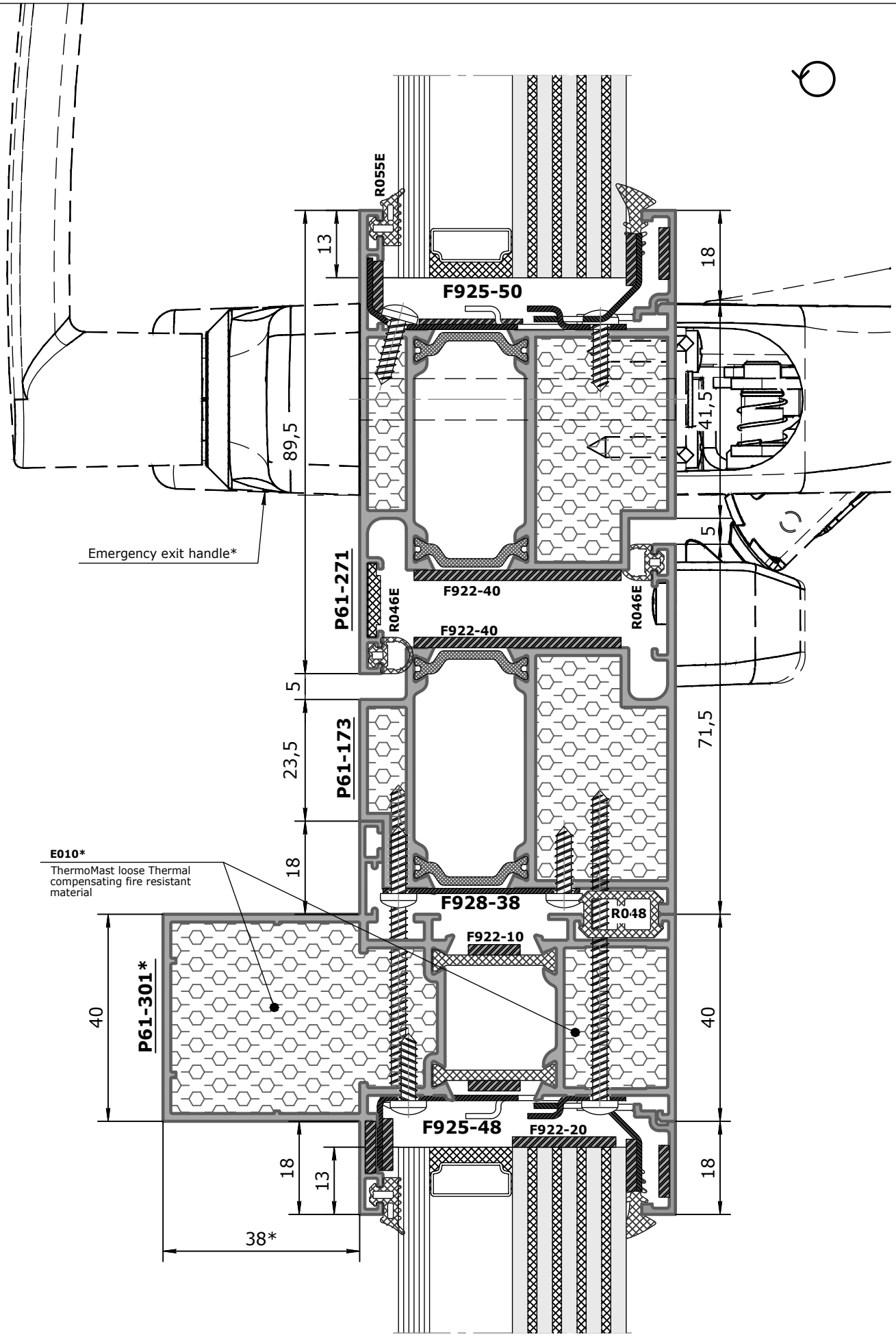

* — Depends on the specifics of the facility

All stainless steel retainers and supplementary aluminium profiles shall be installed using the stainless self-tapping screws **S002** and **S001-35-60-ss** for profile tightening.

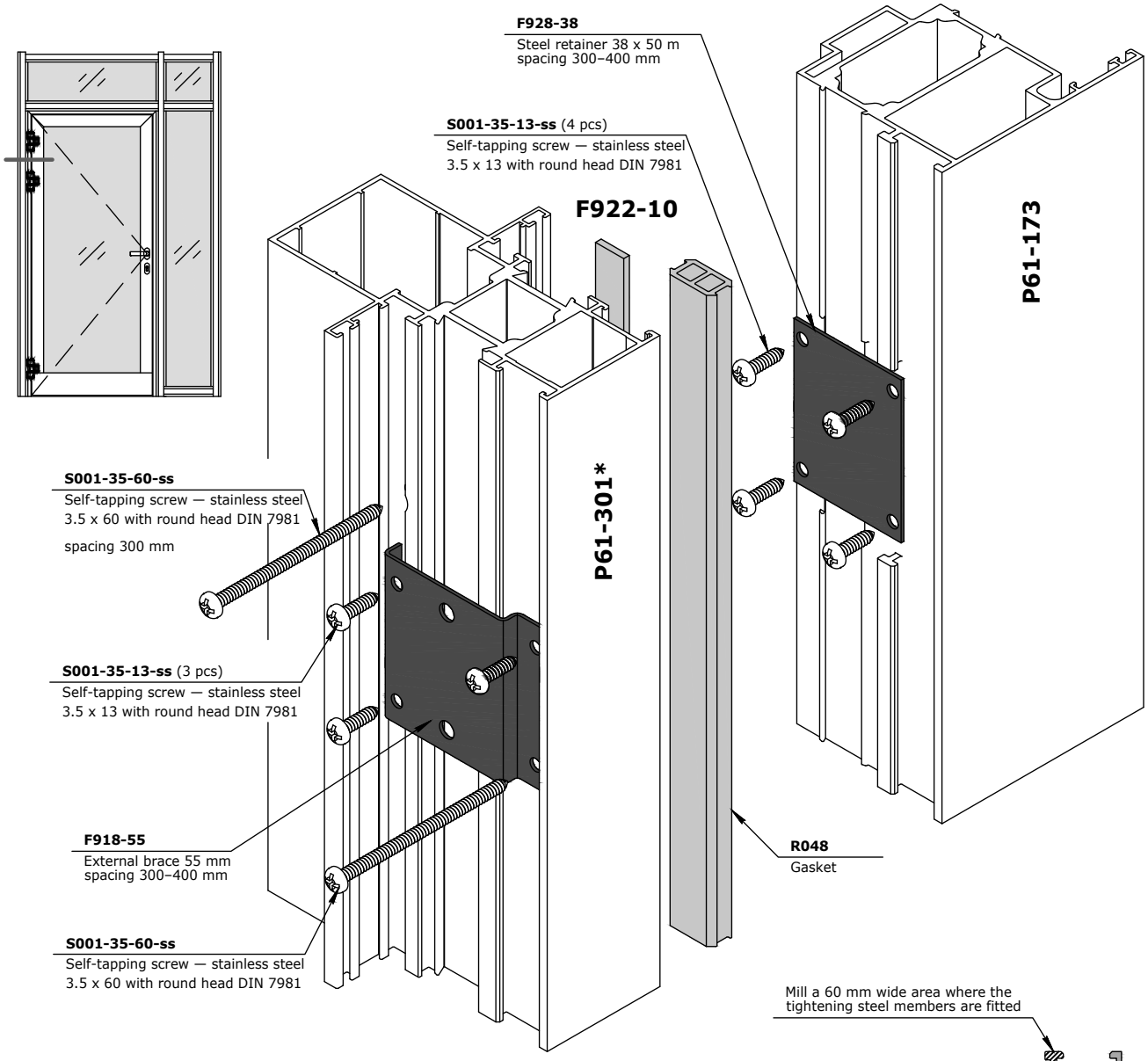
F928-38
Steel retainer 38 x 50 m
spacing 300–400 mm
S001-35-13-ss (4 pcs)
Self-tapping screw — stainless steel
3.5 x 13 with round head DIN 7981
F922-10
P61-173
P61-301*
S001-35-60-ss
Self-tapping screw — stainless steel
3.5 x 60 with round head DIN 7981
spacing 300 mm
S001-35-13-ss (3 pcs)
Self-tapping screw — stainless steel
3.5 x 13 with round head DIN 7981
F918-55
External brace 55 mm
spacing 300–400 mm
S001-35-60-ss
Self-tapping screw — stainless steel
3.5 x 60 with round head DIN 7981
R048
Gasket

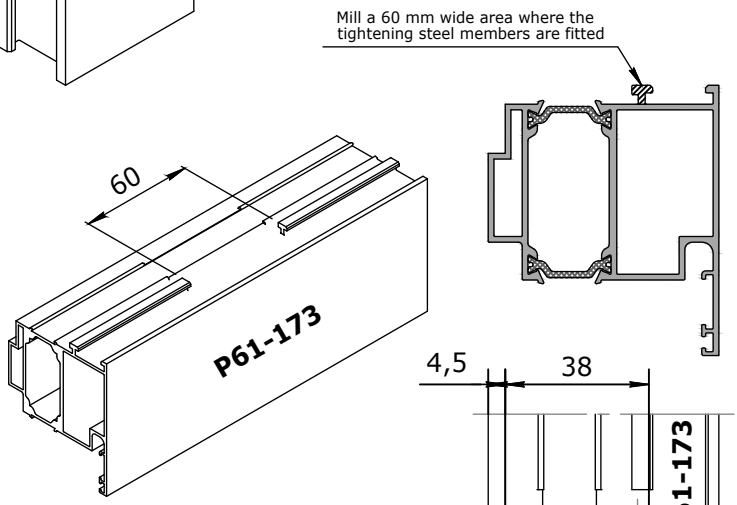
Mill a 60 mm wide area where the
tightening steel members are fitted
60
P61-173

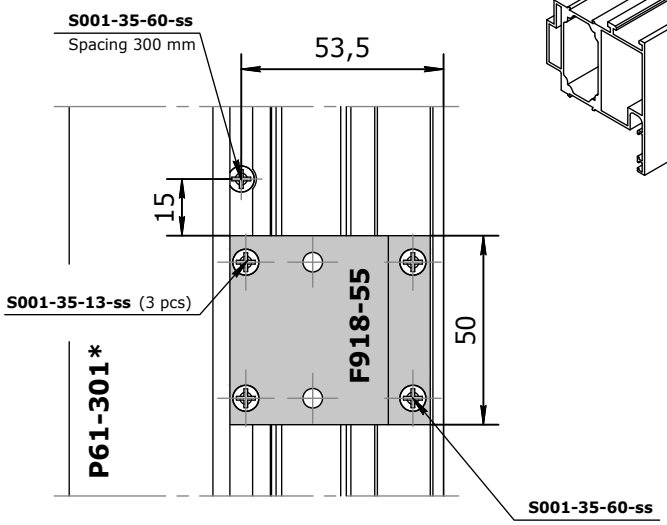
S001-35-60-ss
Spacing 300 mm
53,5
15
S001-35-13-ss (3 pcs)
F918-55
50
P61-301*
S001-35-60-ss

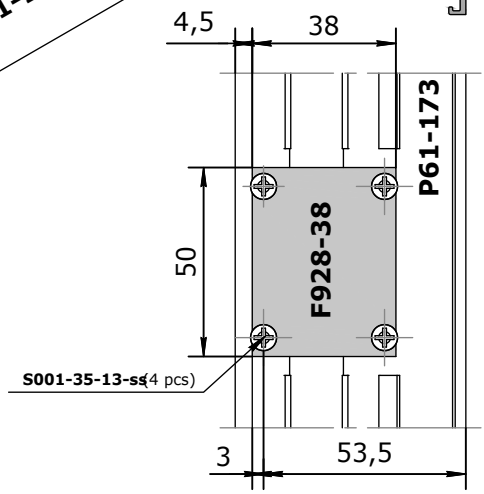
4,5
38
P61-173
50
F928-38
S001-35-13-ss (4 pcs)
3
53,5

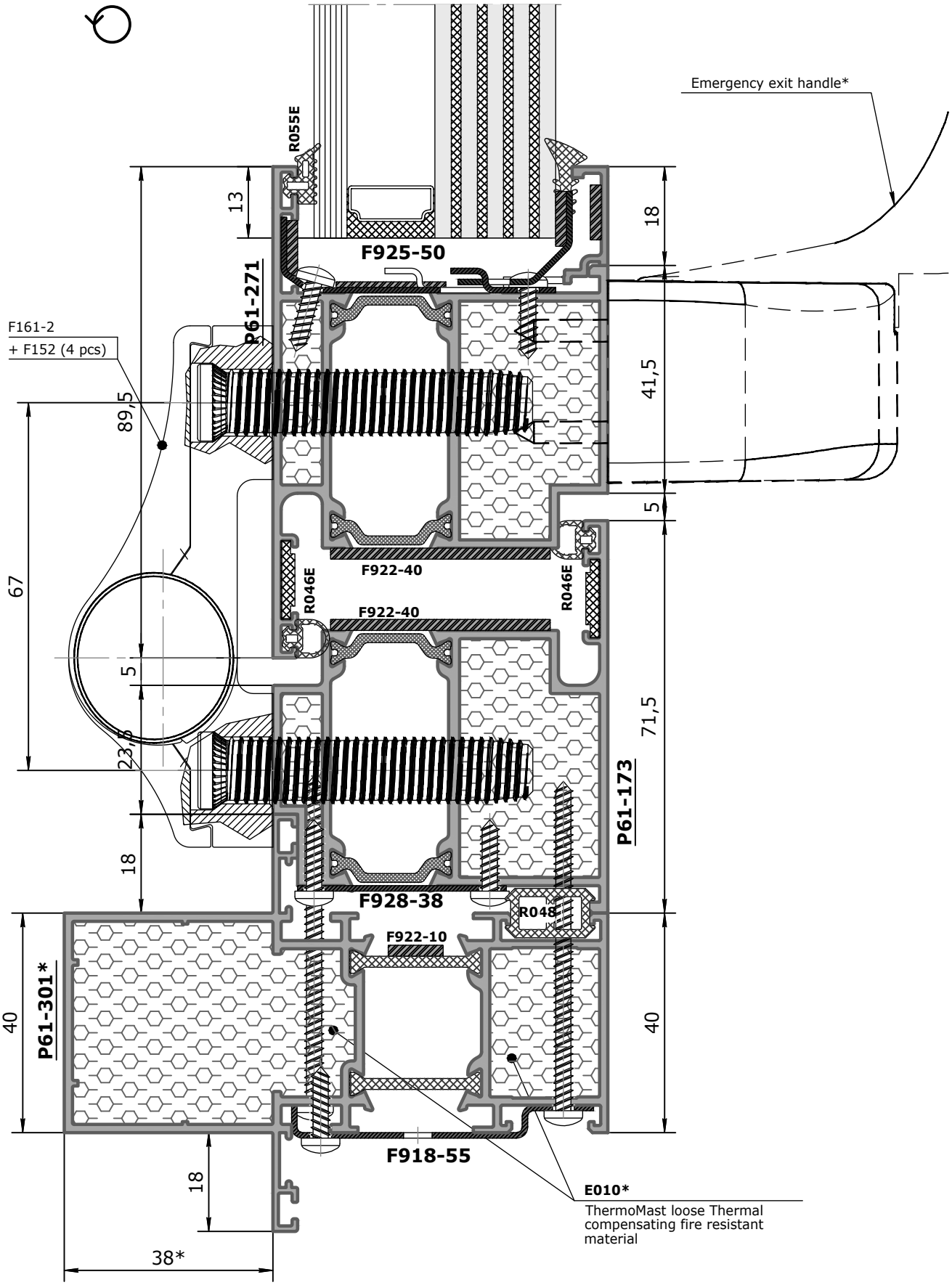

* — Depends on the specifics of the facility

All stainless steel retainers and supplementary aluminium profiles shall be installed using the stainless self-tapping screws **S002** and **S001-35-60-ss** for profile tightening.

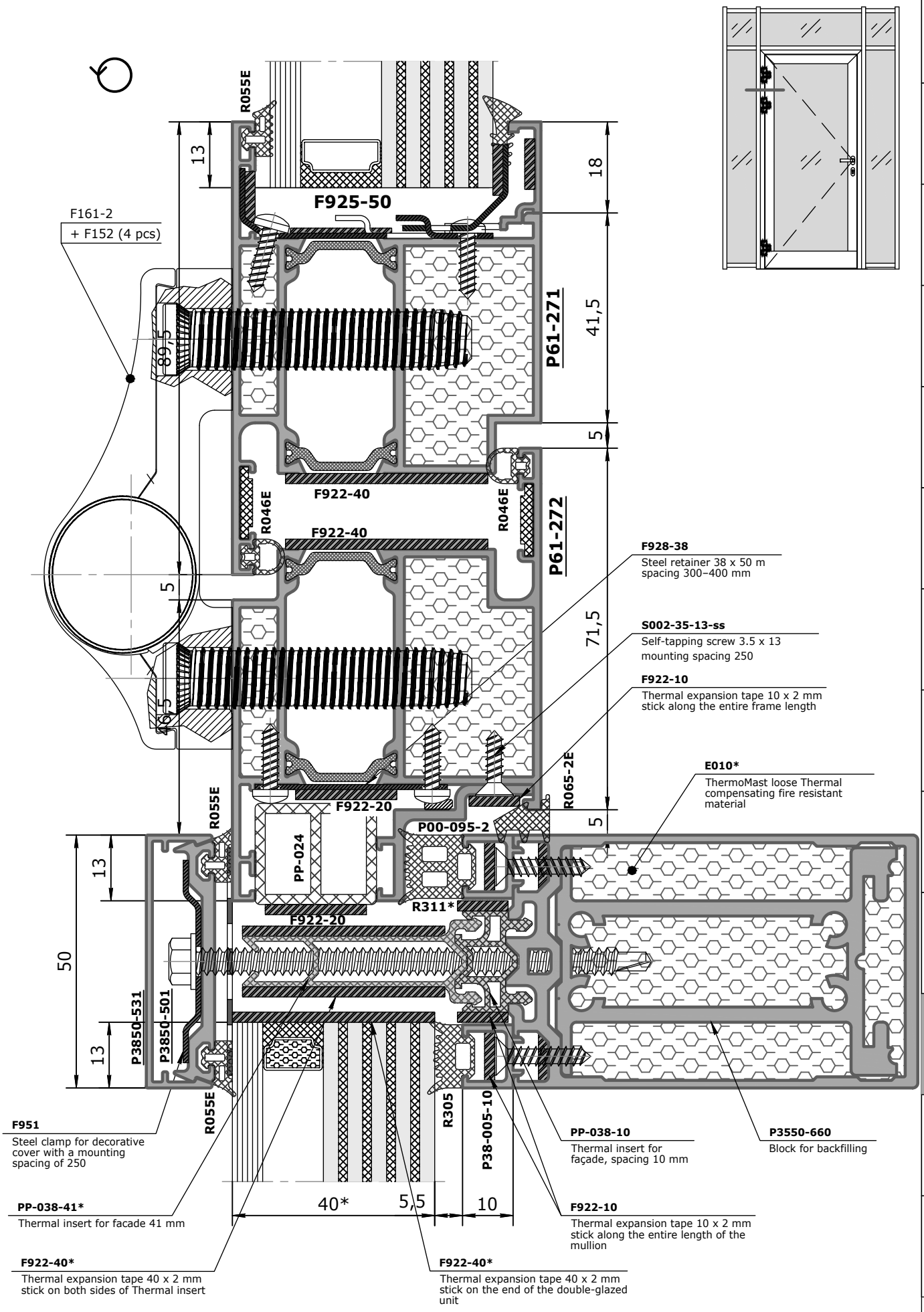

* — Depends on the specifics of the facility

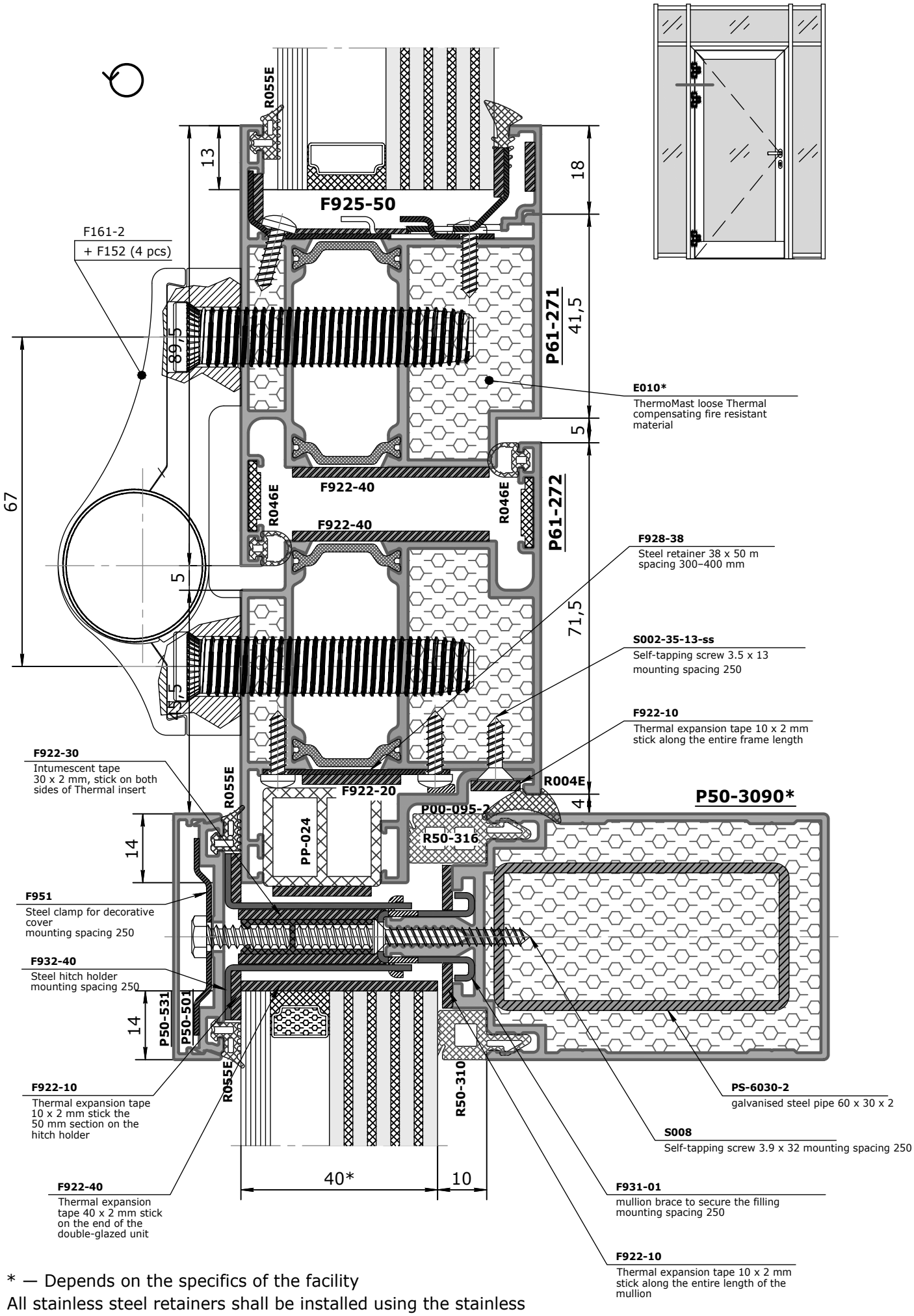

* — Depends on the specifics of the facility

All stainless steel retainers shall be installed using the stainless self-tapping screws **S002**

Installation diagram for tightening steel members. Stained-glass windows

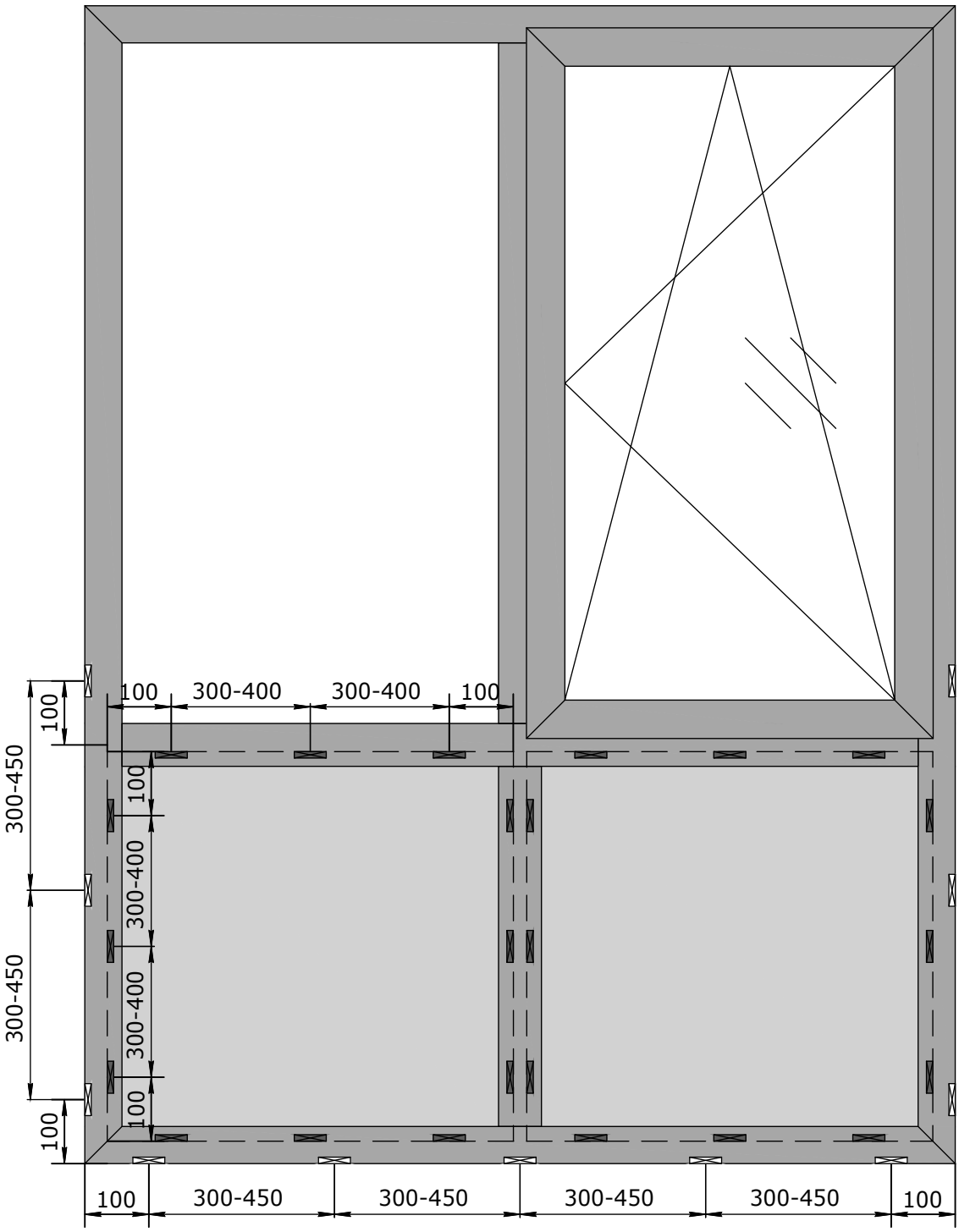

Tightening steel angles F921-42* + F917-50

Tightening steel brace F918

* — Depends on filling thickness

Installation diagram for tightening steel members. doors

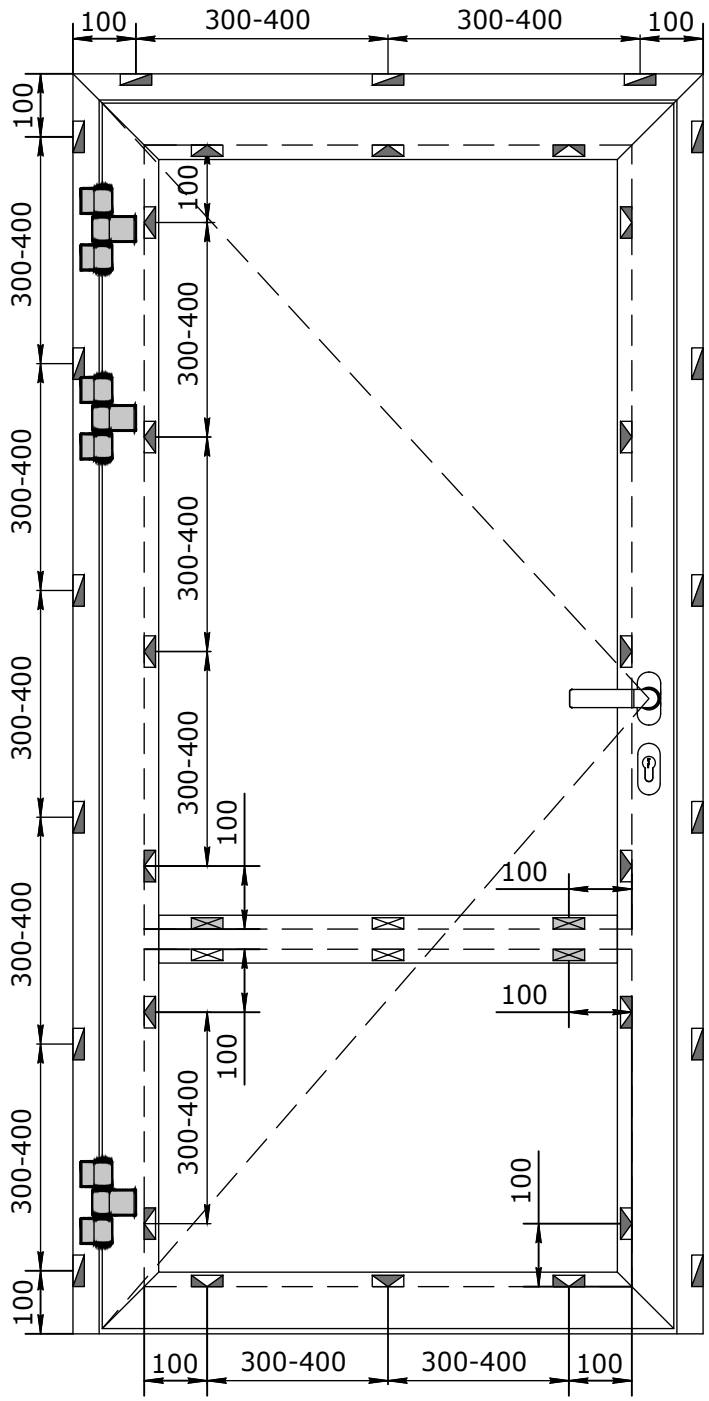

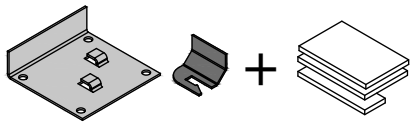

— Tightening steel angles **F925-48** + **F926-20** + glass retainers **F902** + **F905-24***(2 pcs)

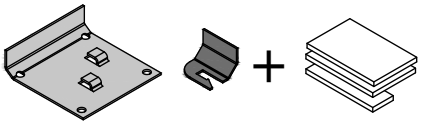

— Tightening steel angles **F925-50** + **F926-20** + glass retainers **F902** + **F905-24***(2 pcs)

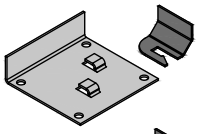

— Tightening steel angles **F925-48** + **F926-20**

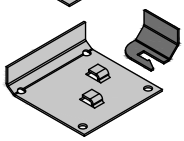

— Tightening steel angles **F925-50** + **F926-20**

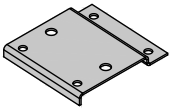

— **F918-55*** External brace

* — Depends on design parameters

Thermal interlock installation diagram

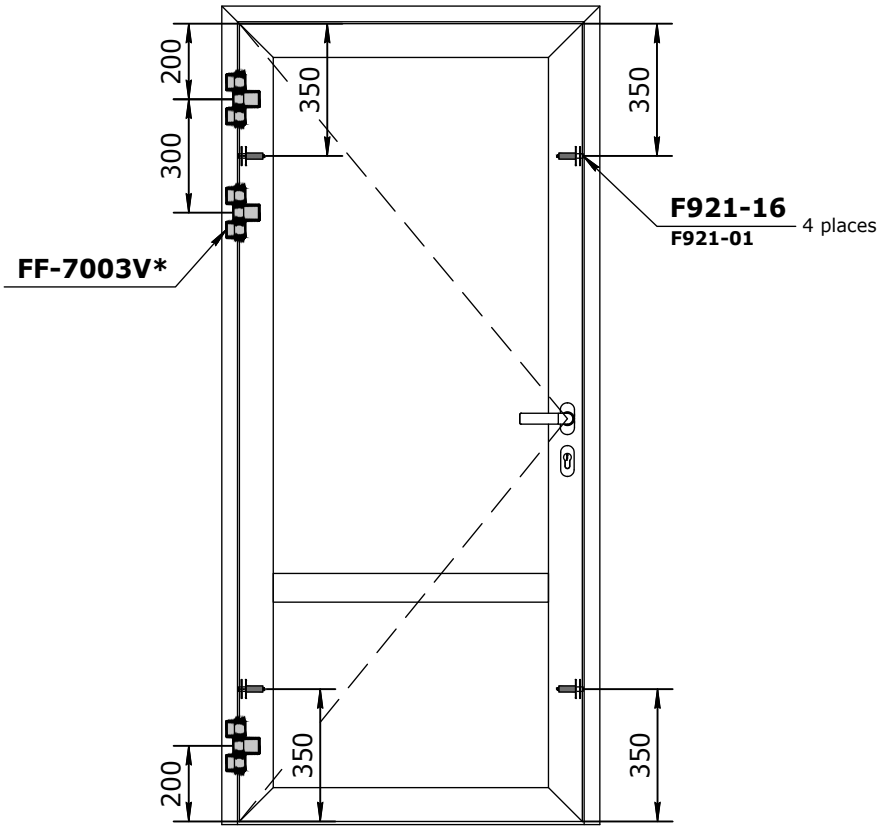

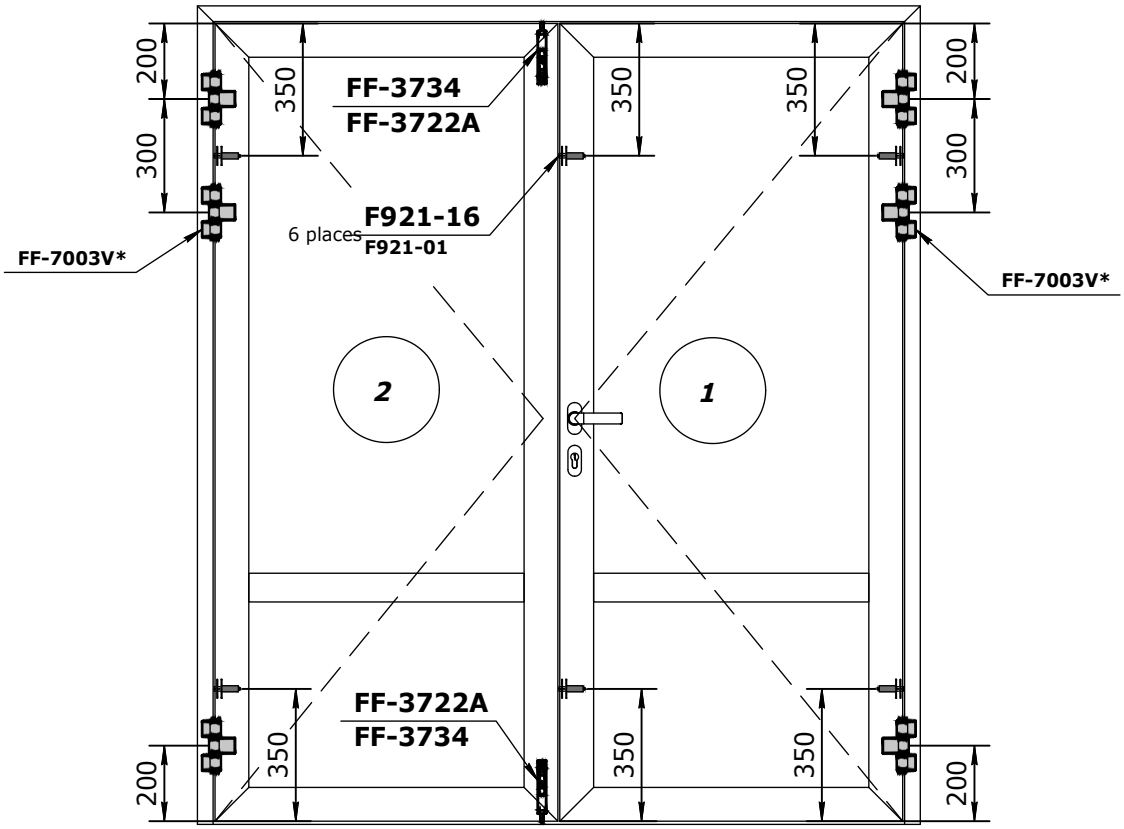

* — The quantity of hinges depends on the product parameters

The electromagnetic locks shall be mounted **within 100 mm** from the regular lock.

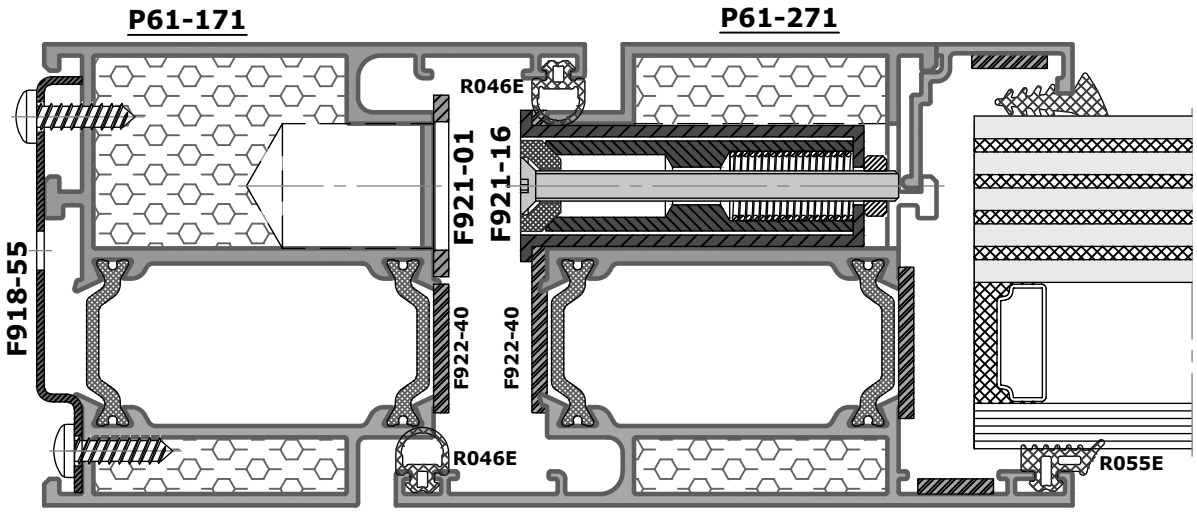

The Thermal interlock"**F921-16** is triggered when the temperature rises during a fire; the fusible cap of the interlock melts and releases a spring-loaded pintle which shoots out into the groove on the door frame.

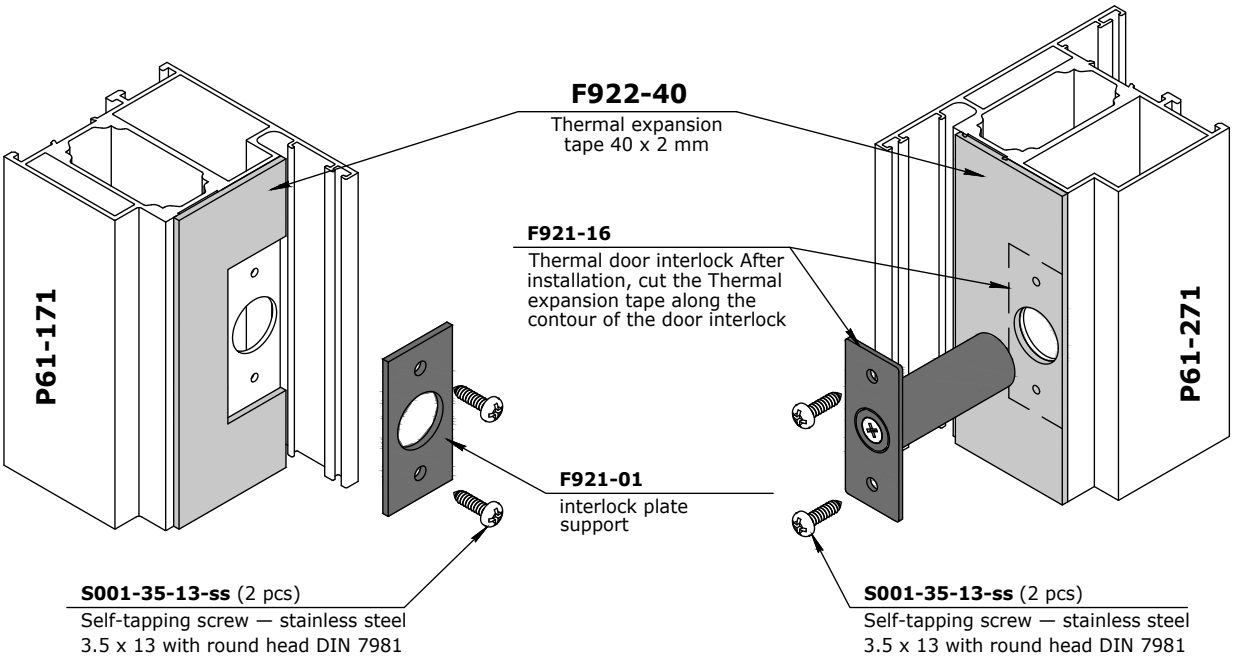

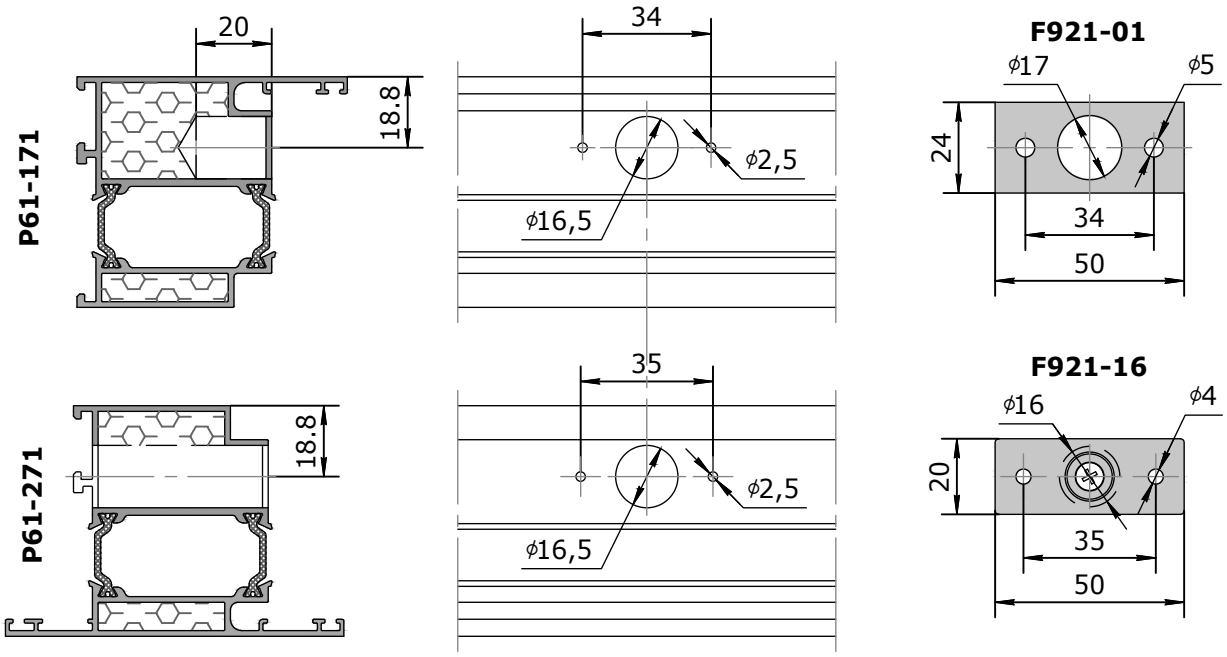

Procedure for filling profiles with fire resistant material

1. Cut up the profiles to assemble the structure. Mill the profile ends (where necessary) for subsequent assembly.

2. Place the profiles upright. The ends of the profiles sawn at a 45 degree angle must face downwards.

3. Temporarily insert the corner embedding parts into the profile chambers and fix them in place. Seal the open profile chambers from below with masking tape. Make 2–3 holes of 5–7 mm dia. each in the masking tape. It is also permissible to make a "plug" of fire-fighting foam in the profile instead of using a masking tape.

4. Fill the internal chambers of the profiles with loose fire resistant material. Leave space where the embedded parts are to be installed.

5. Pour "liquid glass" adhesive into the profile chambers filled with fire resistant material. Any excess adhesive that leaks out can be reused.

6. Allow the adhesive to dry on the profiles for 6–8 hours.

7. Install the tightening steel members (angles and braces) and intumescent tape on the dried-out prefabricated profiles. Fix the steel components with self-tapping screws. The use of rivets is not recommended.

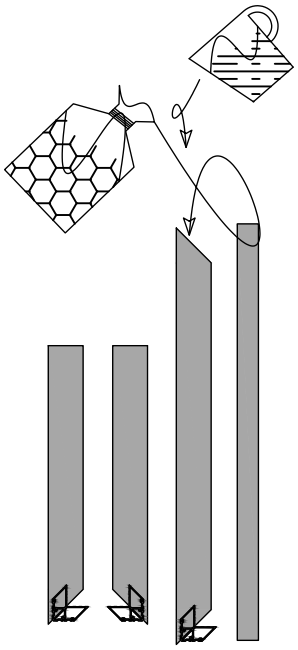

If it is not necessary to fill the entire profile with loose fire retardant material, make an opening in the non-facing part of the profile and pour the fire retardant foam through this opening to form a "plug". Once the foam has cured, fill the remaining part of the profile with loose fire resistant material and adhesive following the procedure above.

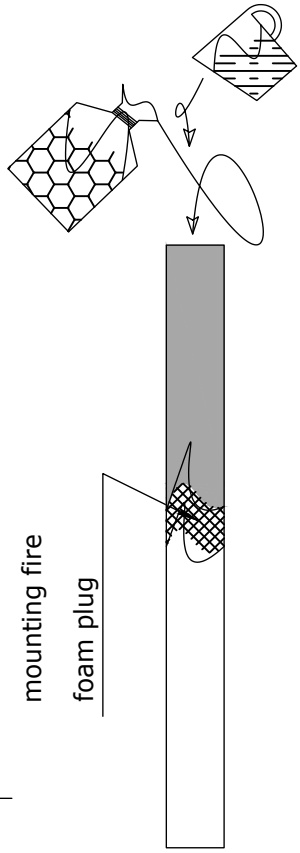

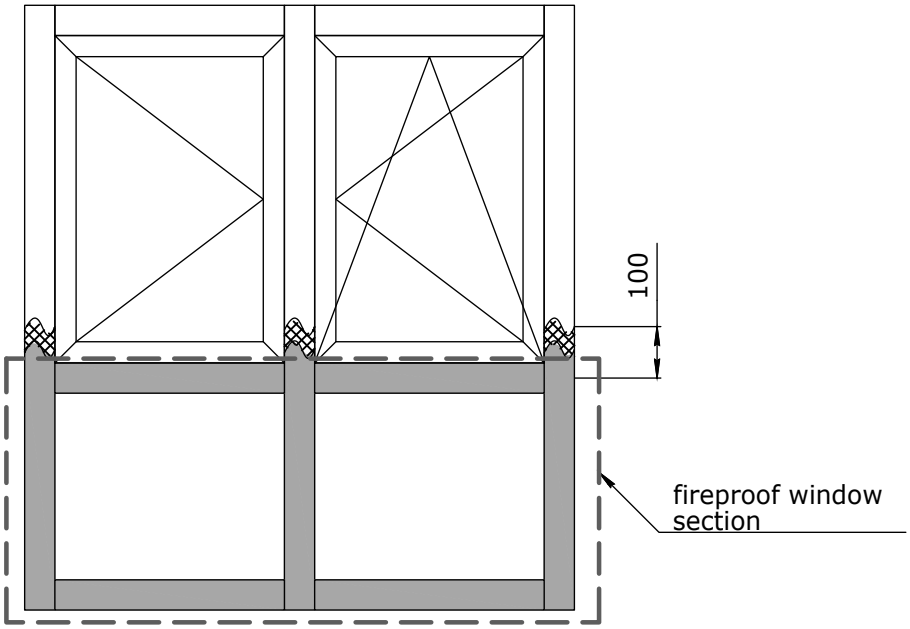

Procedure for filling profiles with fire resistant material (for fire resistance class EIW60)

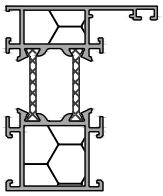

P61-101

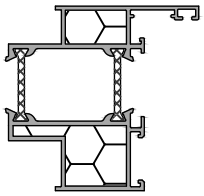

P61-102

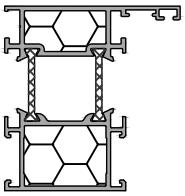

P61-103

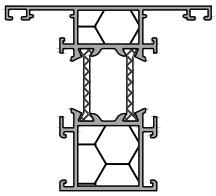

P61-401

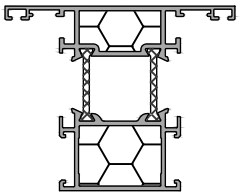

P61-403

P61-452

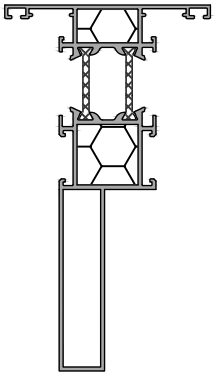

P61-002

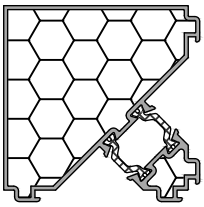

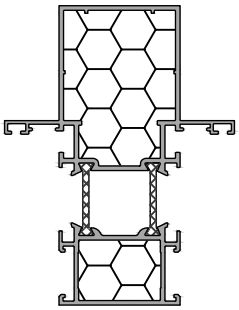

P61-301

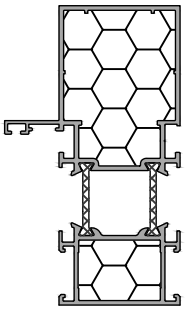

P61-321

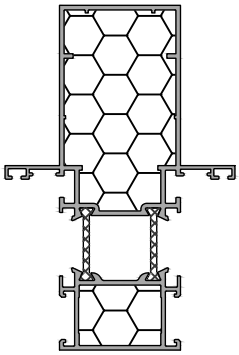

P61-302

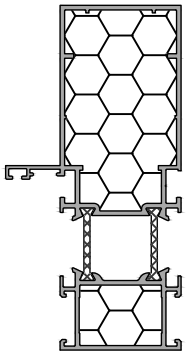

P61-322

filler consumption for profiles:

	E010	E011
P61-002	2.5 L/running meter	0.6 L/running meter
P61-101	0.6 L/running meter	0.2 L/running meter
P61-102	0.7 L/running meter	0.2 L/running meter
P61-103	0.8 L/running meter	0.2 L/running meter
P61-301	2.2 L/running meter	0.5 L/running meter
P61-302	2.8 L/running meter	0.7 L/running meter
P61-303	3.5 L/running meter	0.9 L/running meter
P61-321	2.2 L/running meter	0.5 L/running meter
P61-322	2.8 L/running meter	0.7 L/running meter
P61-323	3.5 L/running meter	0.9 L/running meter
P61-401	0.6 L/running meter	0.2 L/running meter
P61-403	0.7 L/running meter	0.2 L/running meter
P61-452	0.6 L/running meter	0.2 L/running meter

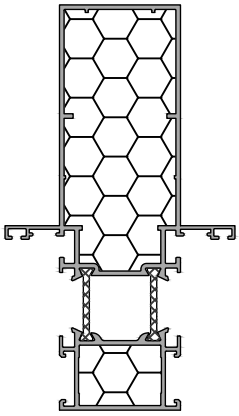

P61-303

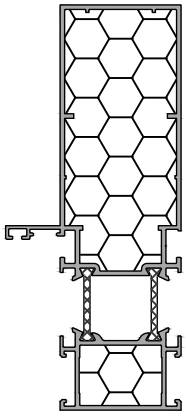

P61-323

Volumes of profile filling with ThermoMast fire resistant material (for fire resistance class E30)

Filler consumption for profiles **E30**			
Designation	**E010**	**E011**	**Theoretical weight, kg/running meter**
P61-014	0.1 L/running meter	0.05 L/running meter	1.255
P61-014-2	0.4 L/running meter	0.1 L/running meter	2.018
P61-103	0.5 L/running meter	0.1 L/running meter	2.489
P61-171	1 L/running meter	0.2 L/running meter	3.107
P61-172	1 L/running meter	0.2 L/running meter	3.106
P61-173	1 L/running meter	0.2 L/running meter	3.076
P61-174	1 L/running meter	0.2 L/running meter	3.075
P61-212-190	3.3 L/running meter	0.8 L/running meter	8.515
P61-271	1 L/running meter	0.2 L/running meter	3.201
P61-272	1 L/running meter	0.2 L/running meter	3.202
P61-403	0.5 L/running meter	0.1 L/running meter	2.26
P61-404	0.7 L/running meter	0.2 L/running meter	2.679
P61-405	1.4 L/running meter	0.3 L/running meter	4.104

P61-171

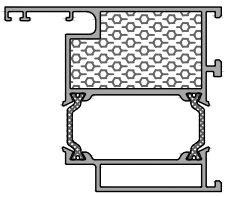

P61-172

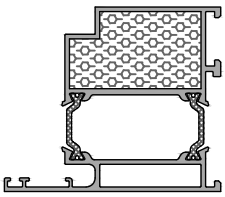

P61-173

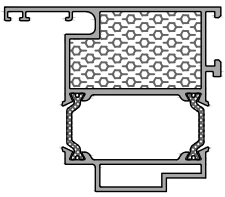

P61-174

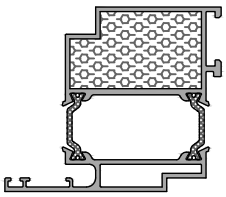

P61-271

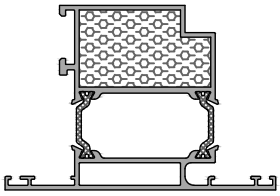

P61-272

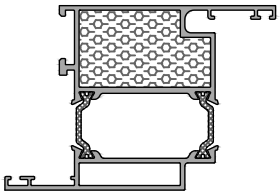

P61-212-190

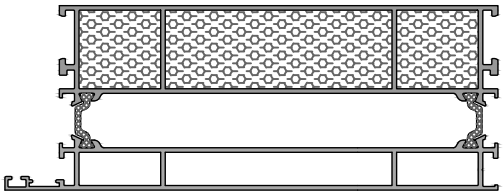

P61-403

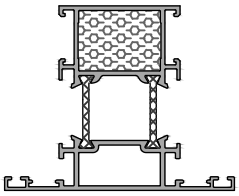

P61-404

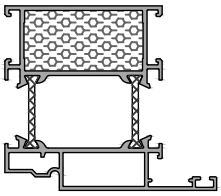

P67-405

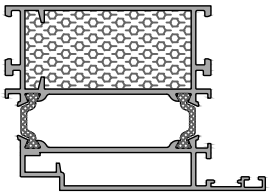

P61-103

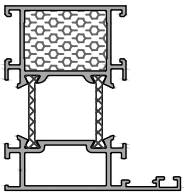

P61-014

P61-014-2

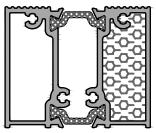

Volumes of profile filling with ThermoMast fire resistant material (for fire resistance class E60)

Filler consumption for profiles **E60**			
Designation	**E010**	**E011**	**Theoretical weight, kg/running meter**
P61-014	0.3 L/running meter	0.1 L/running meter	1.519
P61-014-2	0.9 L/running meter	0.2 L/running meter	2.702
P61-103	0.8 L/running meter	0.2 L/running meter	2.988
P61-171	1.2 L/running meter	0.3 L/running meter	3.484
P61-172	1.2 L/running meter	0.3 L/running meter	3.483
P61-173	1.2 L/running meter	0.3 L/running meter	3.365
P61-174	1.2 L/running meter	0.3 L/running meter	3.364
P61-212-190	4.7 L/running meter	1.1 L/running meter	10.643
P61-271	1.2 L/running meter	0.3 L/running meter	3.578
P61-272	1.2 L/running meter	0.3 L/running meter	3.579
P61-403	0.8 L/running meter	0.2 L/running meter	2.76
P61-404	1.1 L/running meter	0.3 L/running meter	3.278
P61-405	1.9 L/running meter	0.2 L/running meter	4.911

P61-171

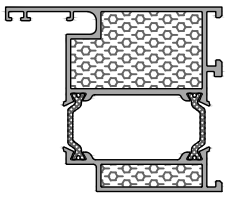

P61-172

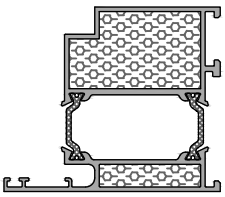

P61-173

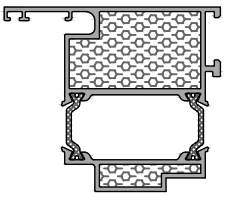

P61-174

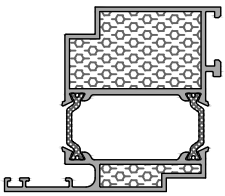

P61-271

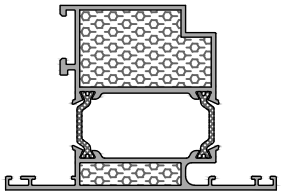

P61-272

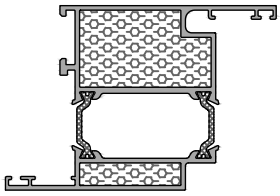

P61-212-190

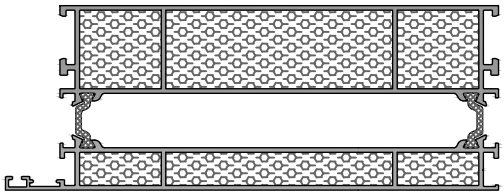

P61-403

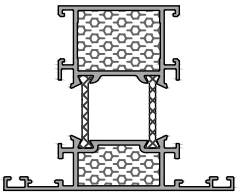

P61-404

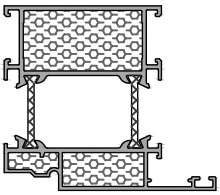

P67-405

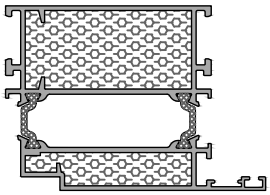

P61-103

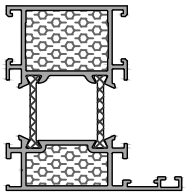

P61-014

P61-014-2

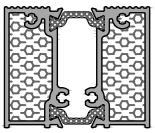

Profile machining for installation of tightening steel members

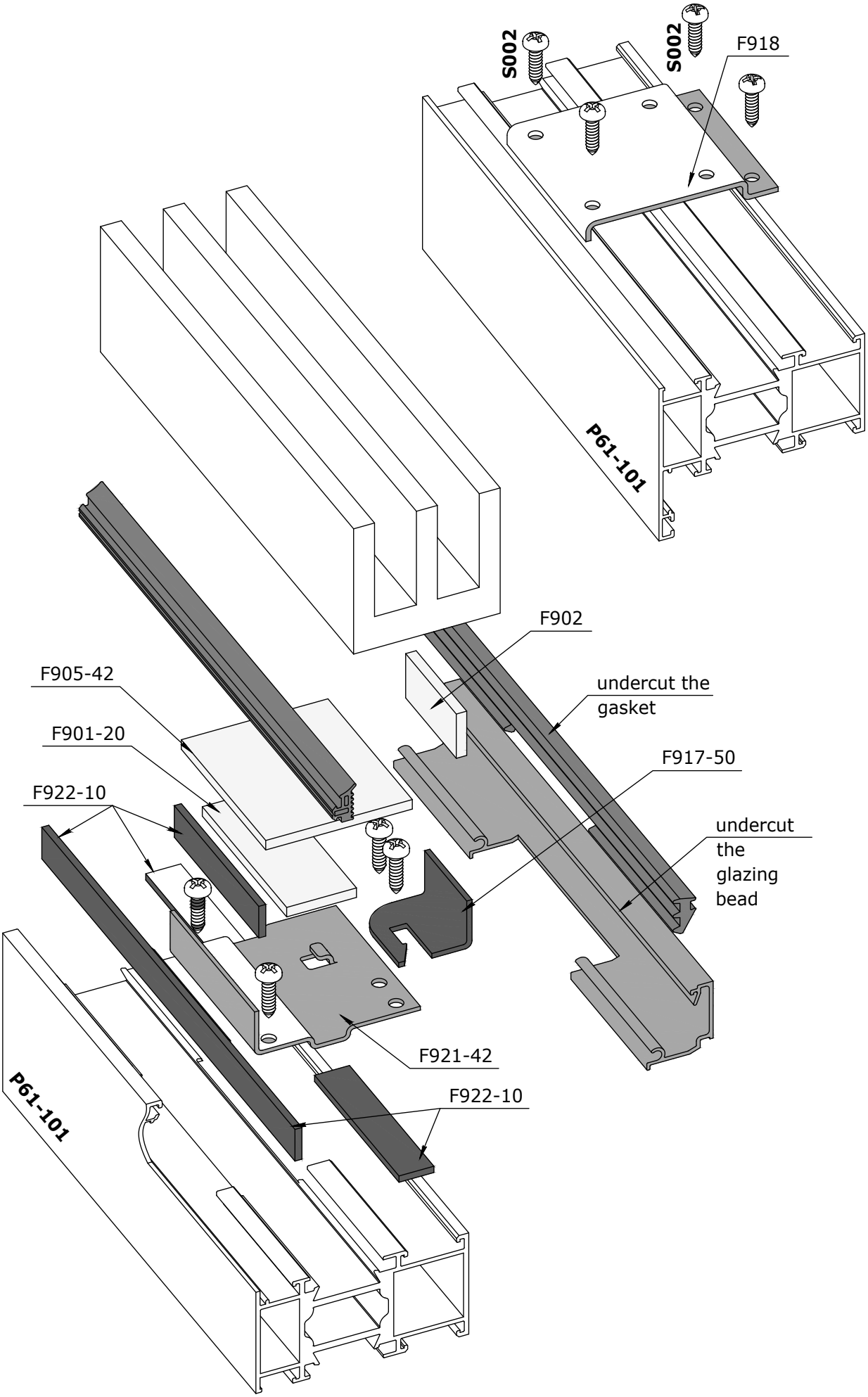

Glazing table. Stained-glass windows

Section **A** across the mounting points of tightening steel members

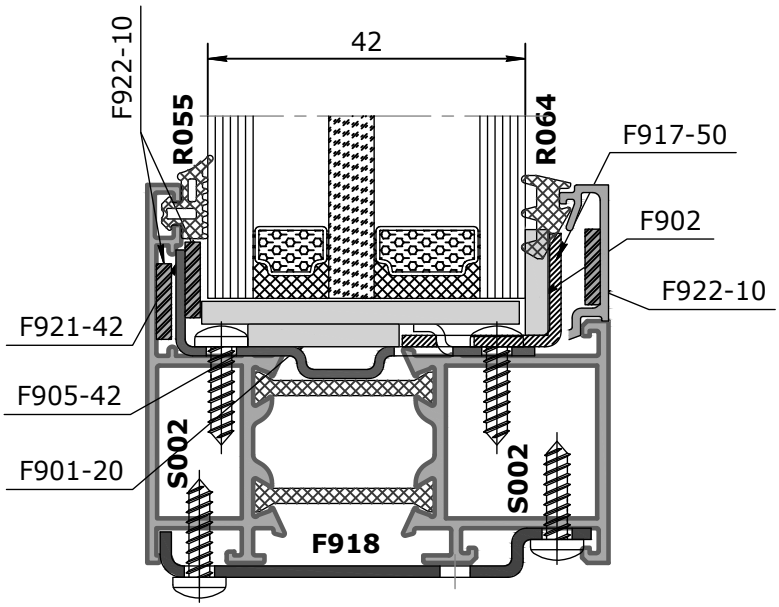

Section **A** across the mounting points of tightening steel members

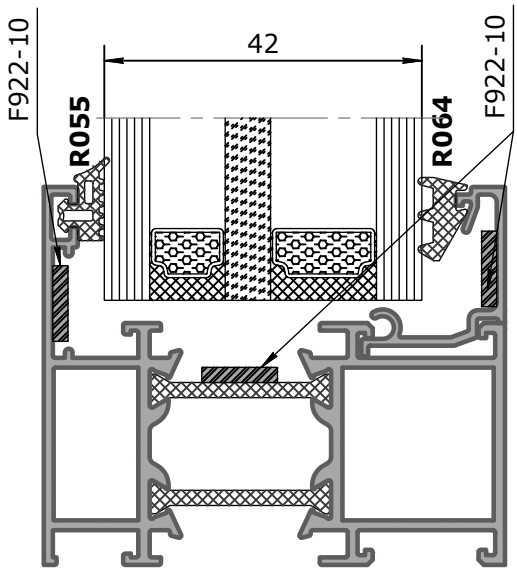

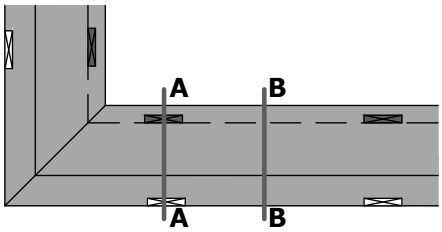

Profile fillers
E010 — loose fire resistant material

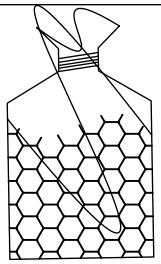

E011 — "liquid glass" adhesive

Glass retainer (glass magnesium board)
F901-20 — 3 x 50 x 20 mm
F902 — 3 x 14 x 30 mm
F905-42 — 3 x 50 x 42 mm

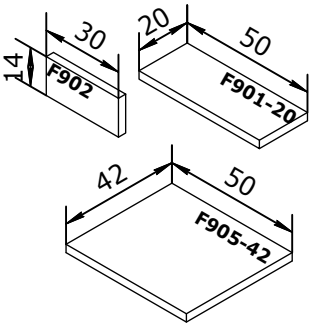

Thermal expansion tape
F922-20 — 2 x 20 mm
F922-10 — 2 x 10 mm

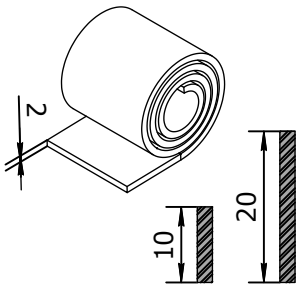

F918
external brace

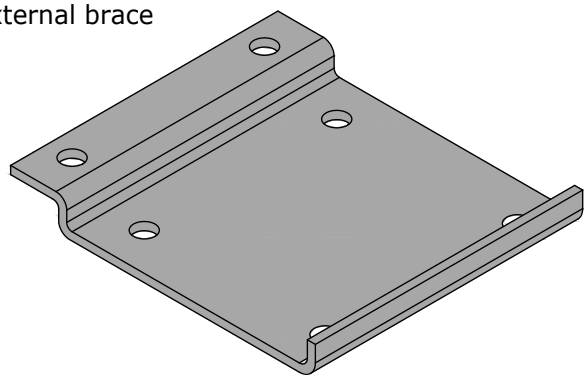

Steel retainers — Internal angles **F921-42**
— for 42 mm filling

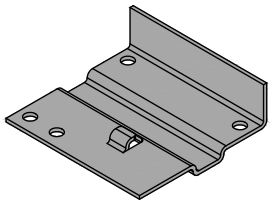

F917-50
Steel retainer — external angle

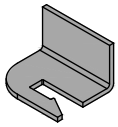

Installation of tightening steel members doors

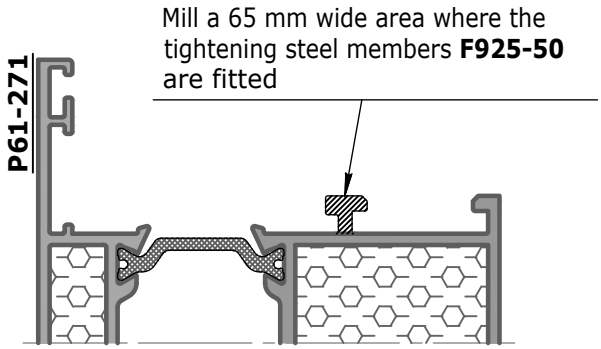

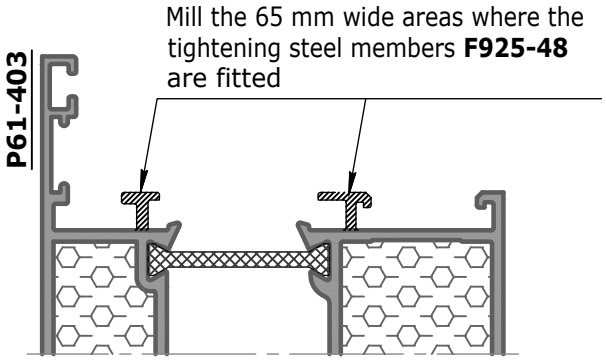

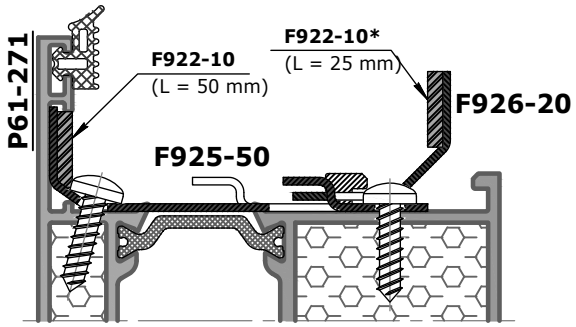

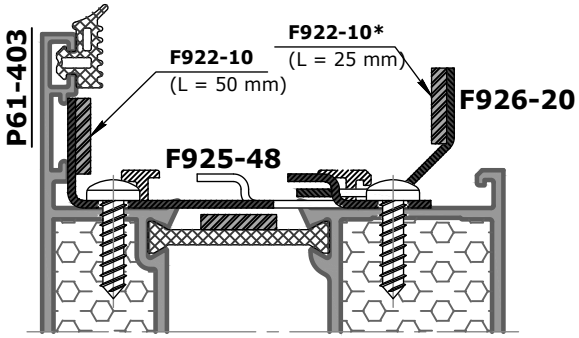

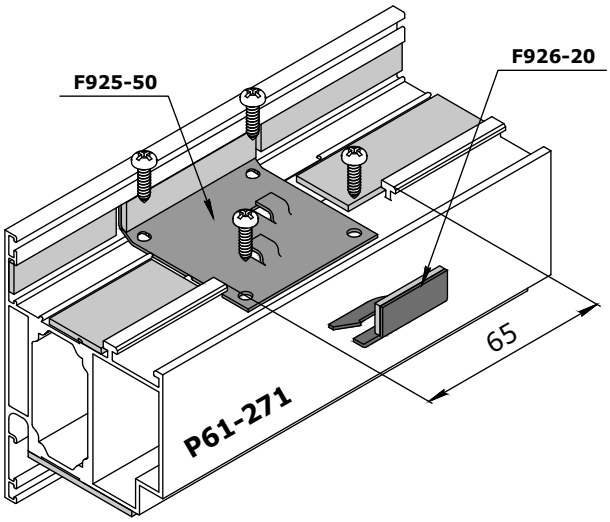

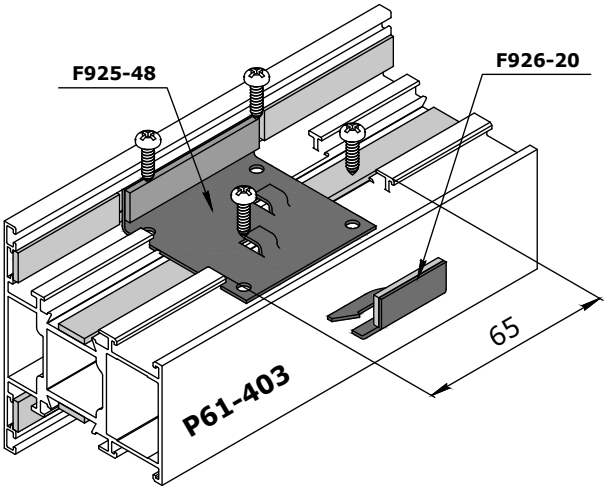

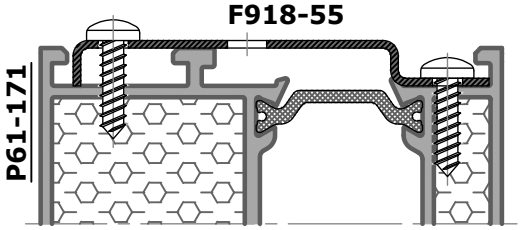

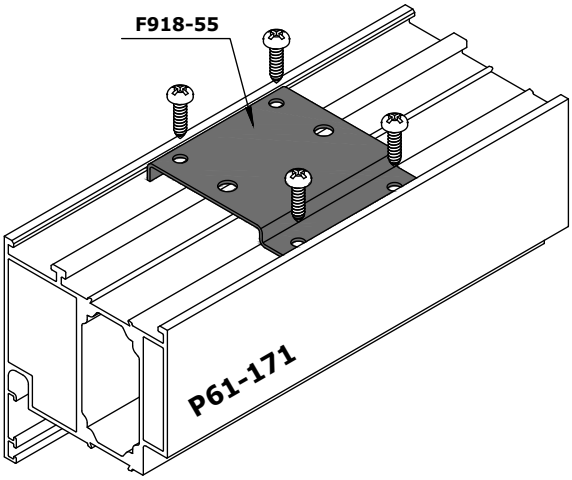

All stainless steel retainers shall be installed using the stainless self-tapping screws **S002**

Installation of Thermal expansion tapes doors

The self-adhesive sealing Thermal expansion (intumescent) tape, based on oxidised graphite, shall be installed around the perimeter of the fire-resistant filler and at the junction of the two profiles.
Operating principle: in the event of a fire, the heat-sealing tape immediately begins to intumesce under the effect of high temperatures (from 180 °C). It expands tenfold and fills the gaps in the fire resistant structure, preventing the spread of fire and combustion products to adjacent rooms.

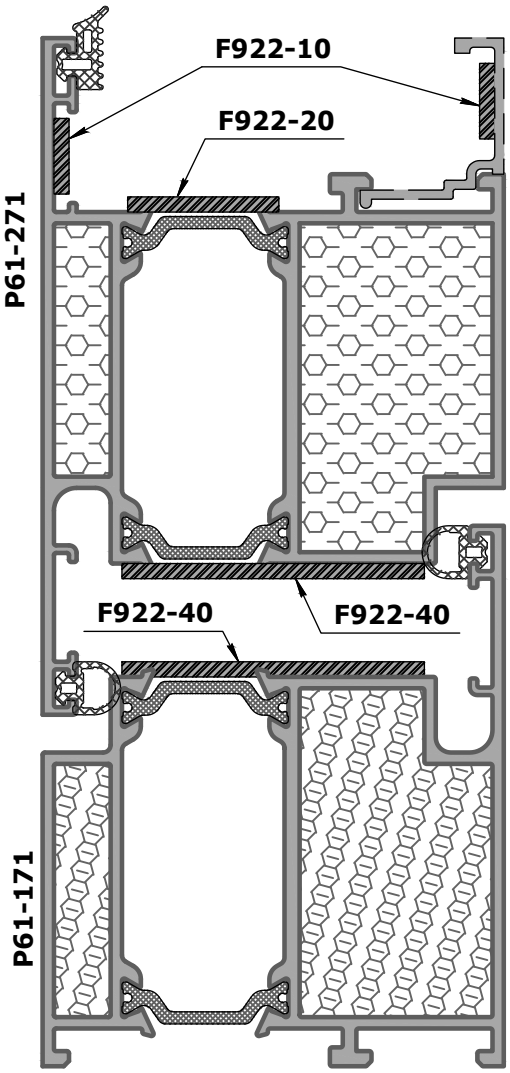

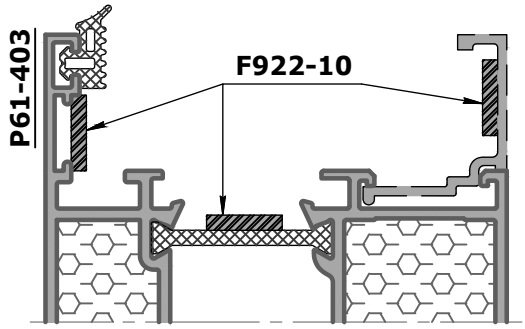

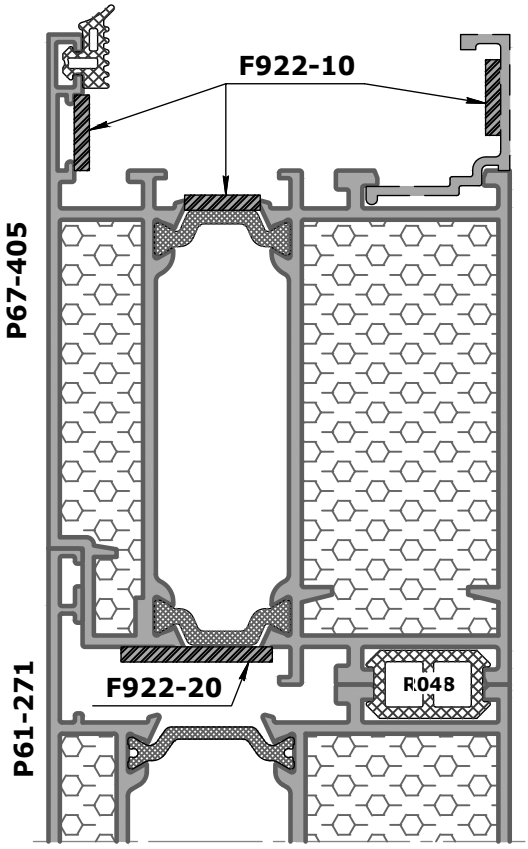

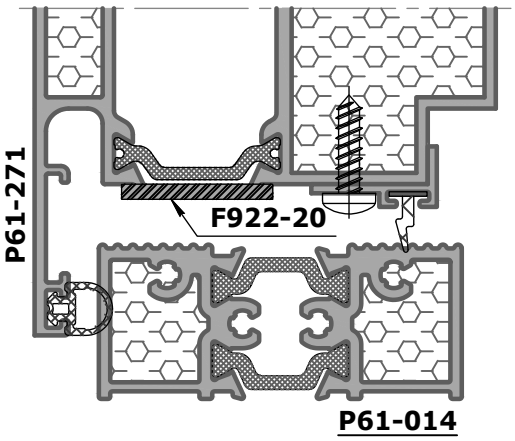

Installation of tightening steel members door frame integrated in façade

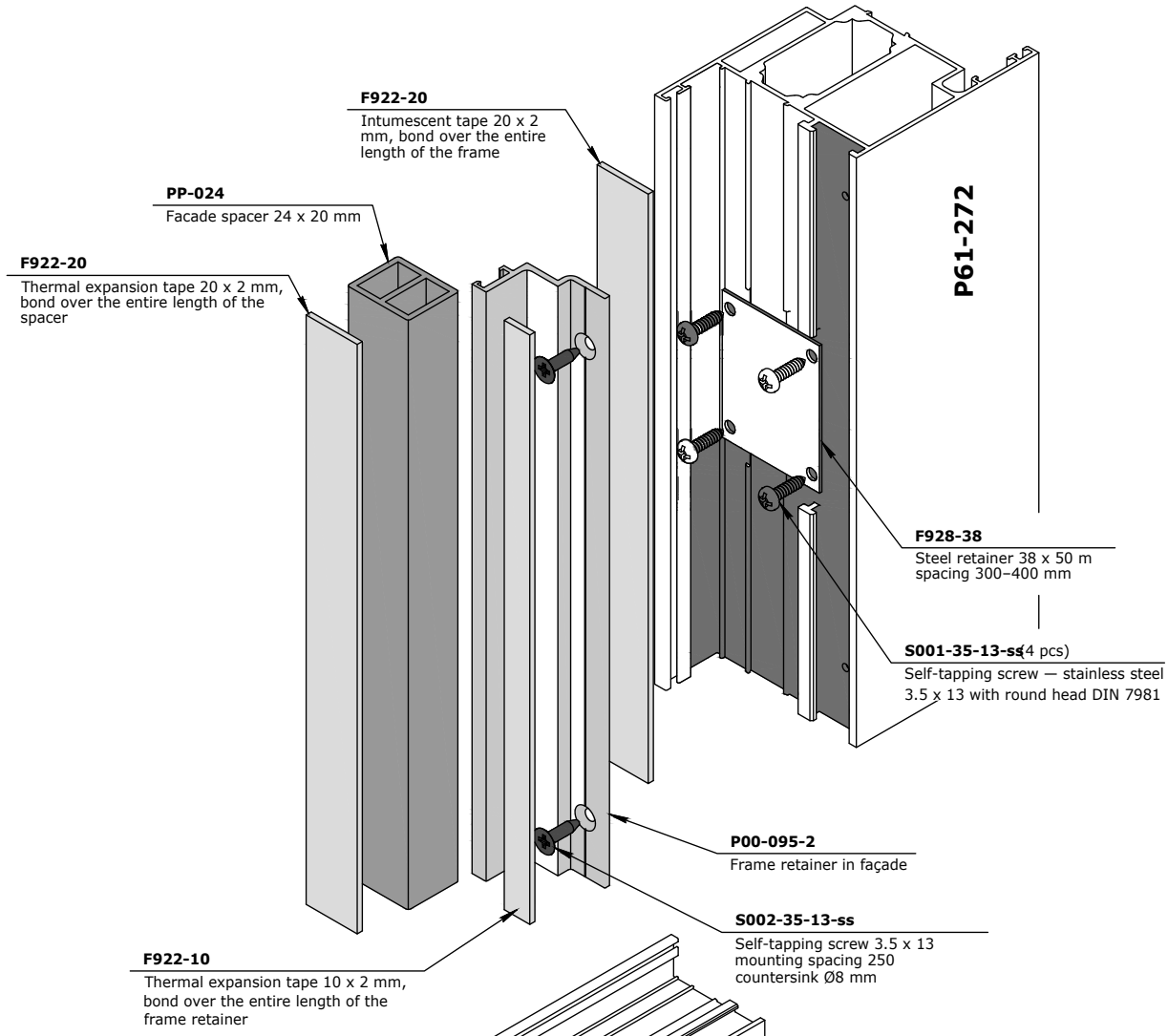

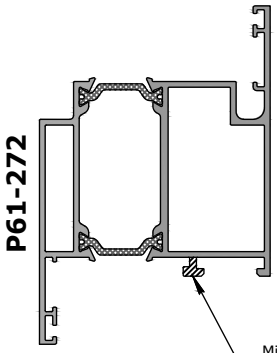

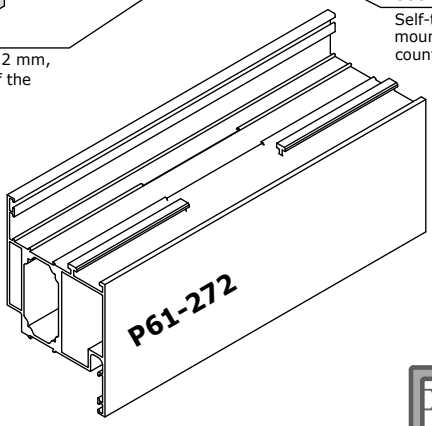

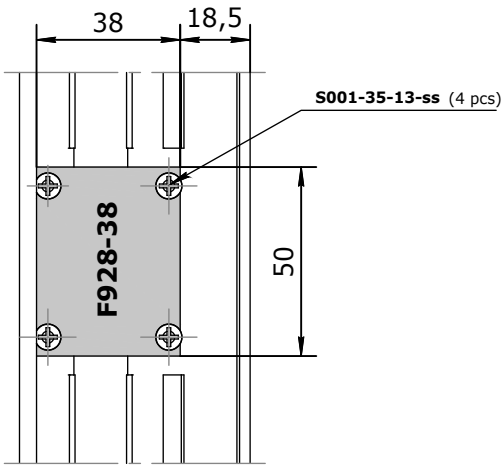

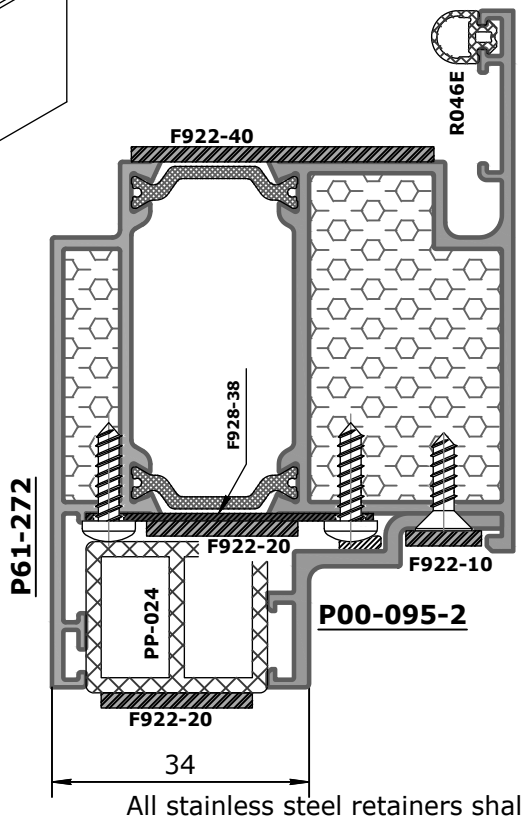

All stainless steel retainers shall be installed using the stainless self-tapping screws **S002**

Glazing table fire resistant filling 28–32 mm doors

All stainless steel retainers shall be installed using the stainless self-tapping screws
S002

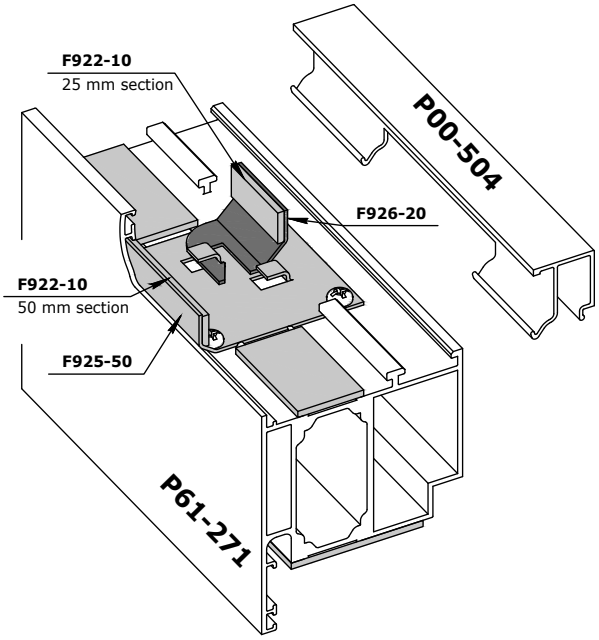

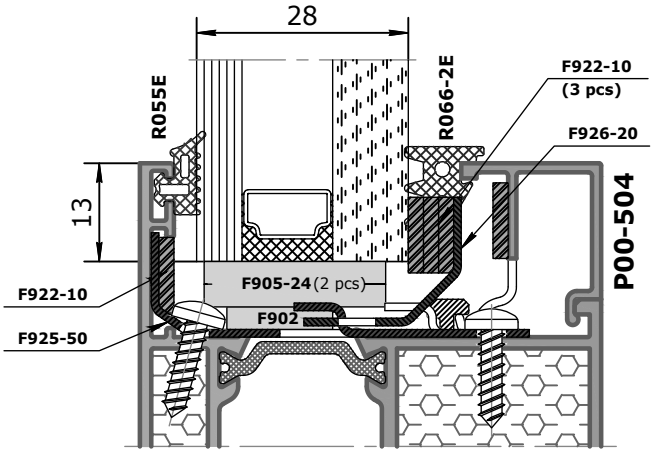

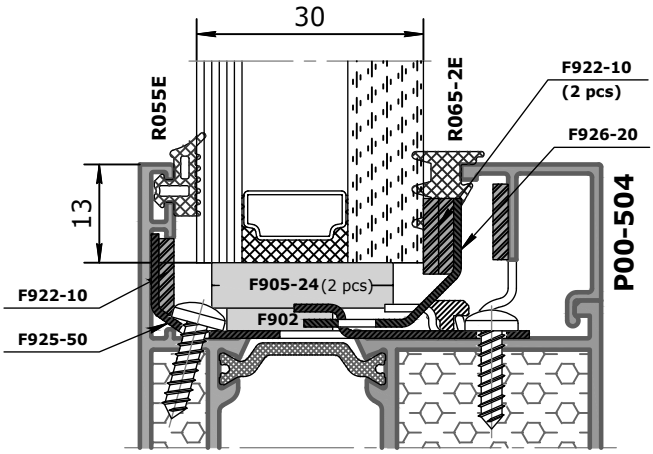

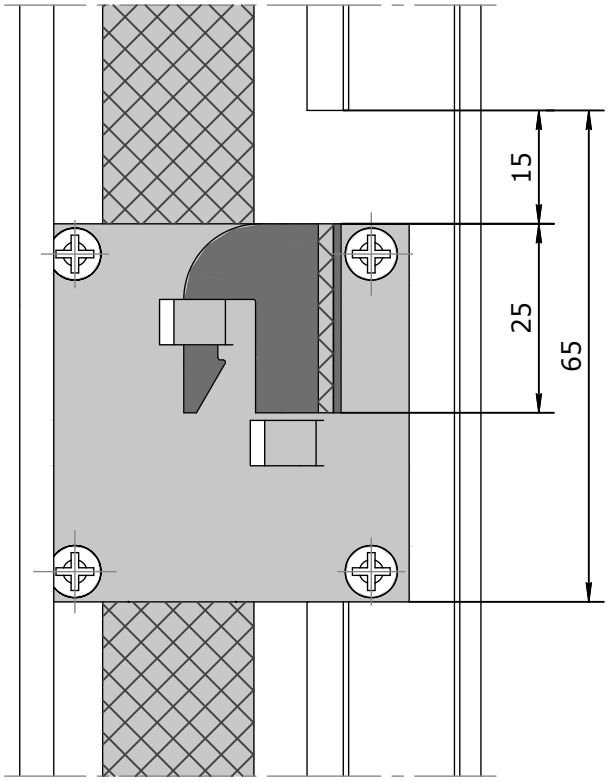

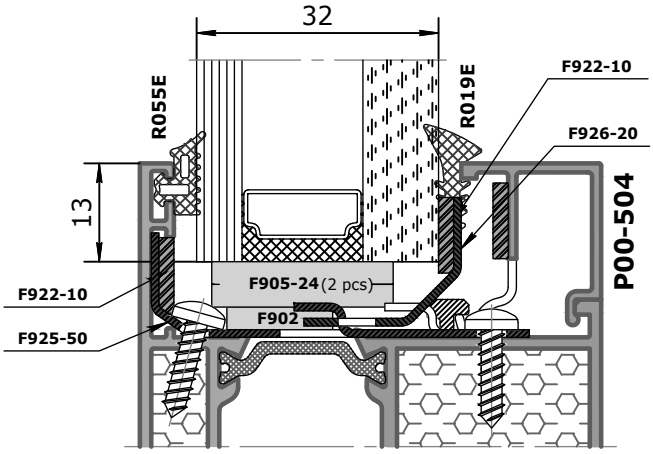

Machining
glazing bead P00-504

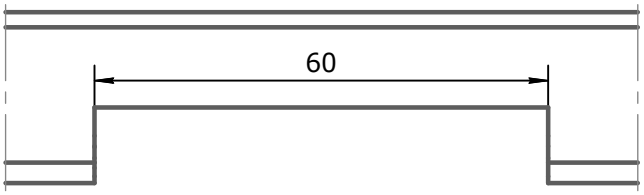

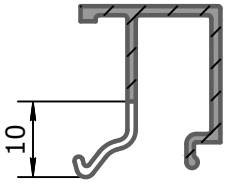

Glazing table fire resistant filling 28–32 mm impost (base) of the door

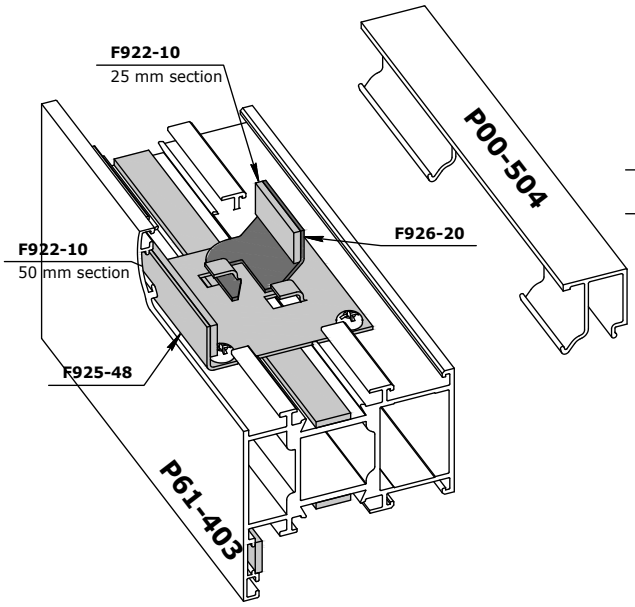

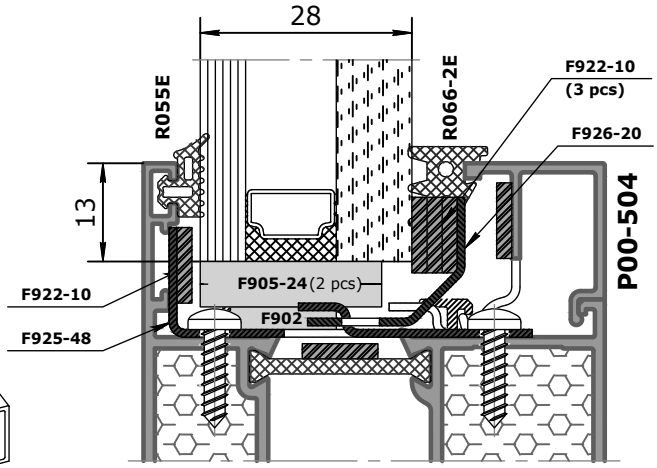

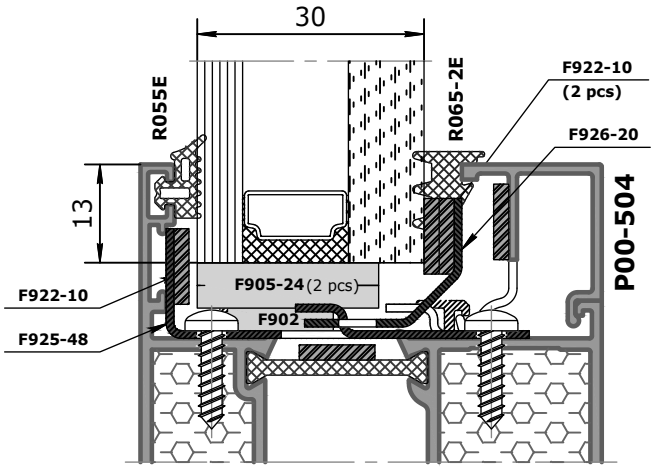

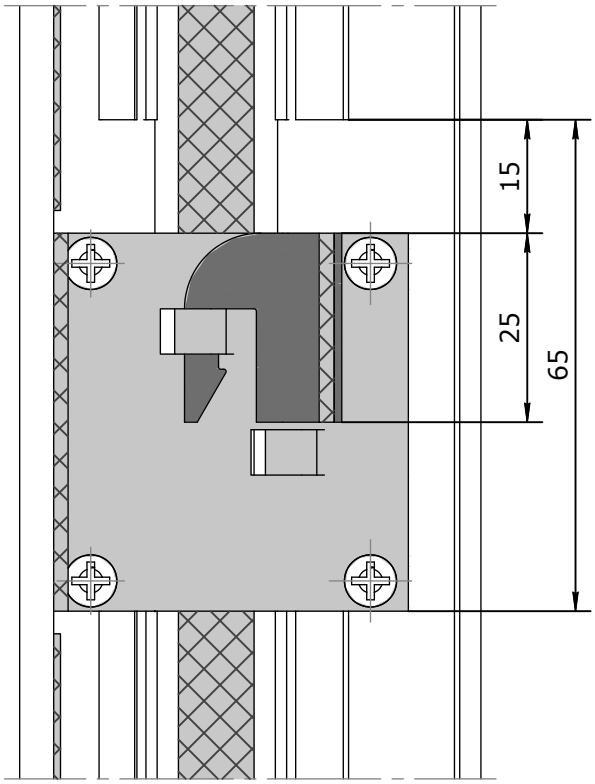

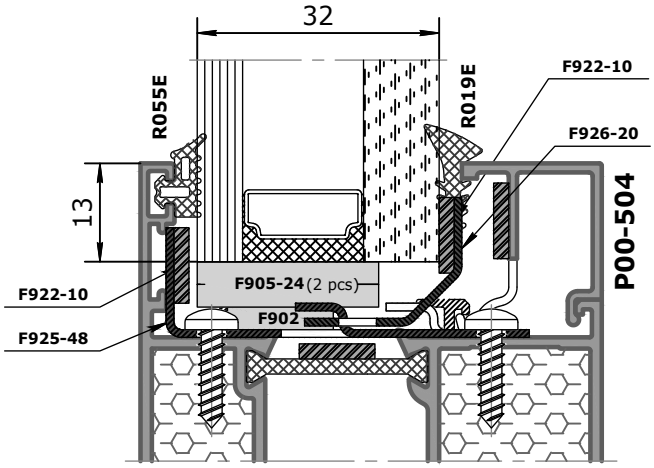

All stainless steel retainers shall be installed using the stainless self-tapping screws **S002**

Glazing table fire resistant filling 40–44 mm doors

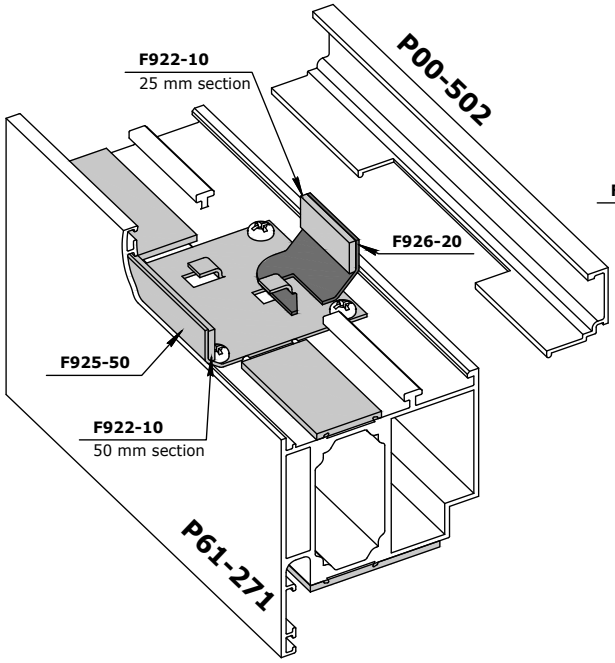

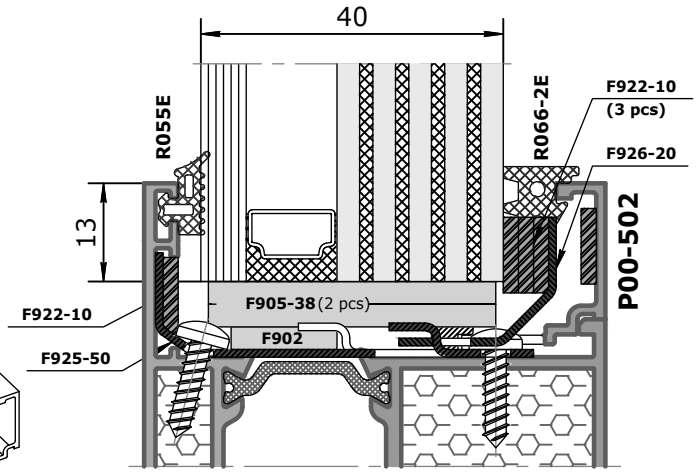

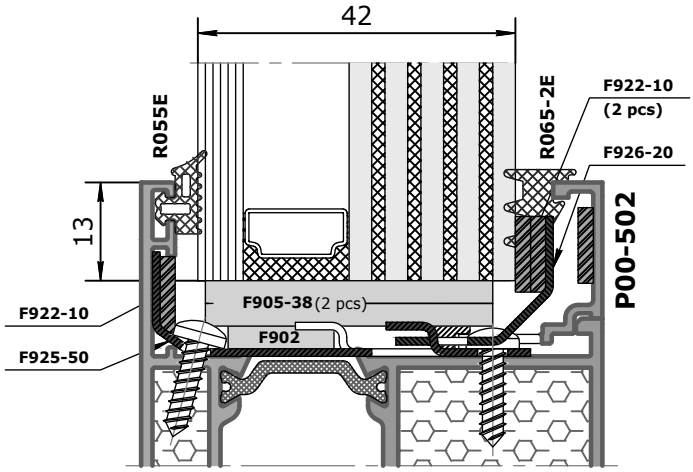

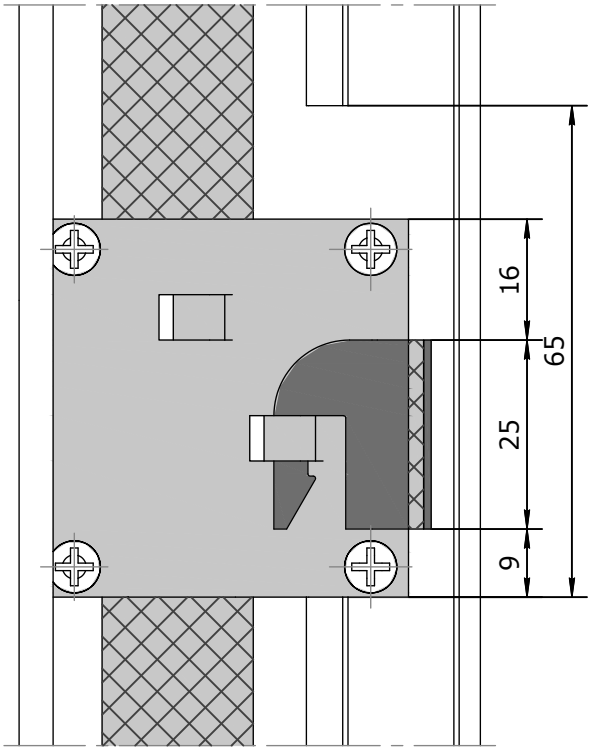

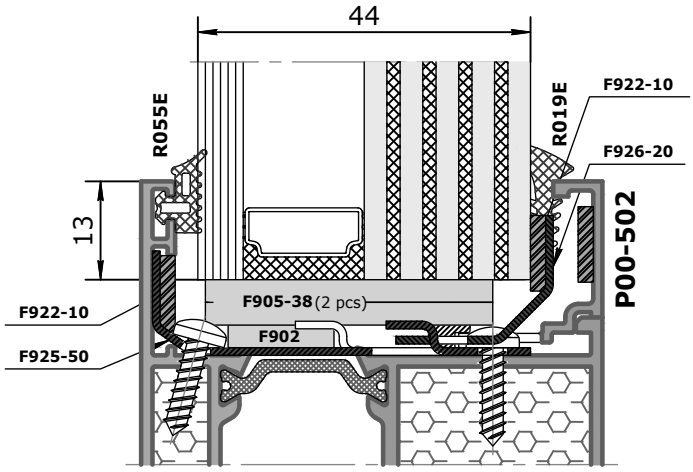

Machining
glazing bead P00-502

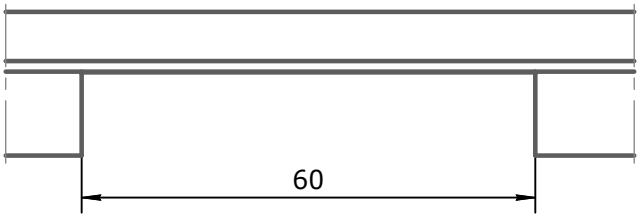

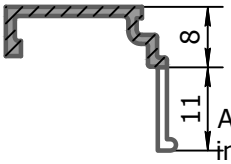

All stainless steel retainers shall be installed using the stainless self-tapping screws **S002**

Glazing table fire resistant filling 40–44 mm impost (base) of the door

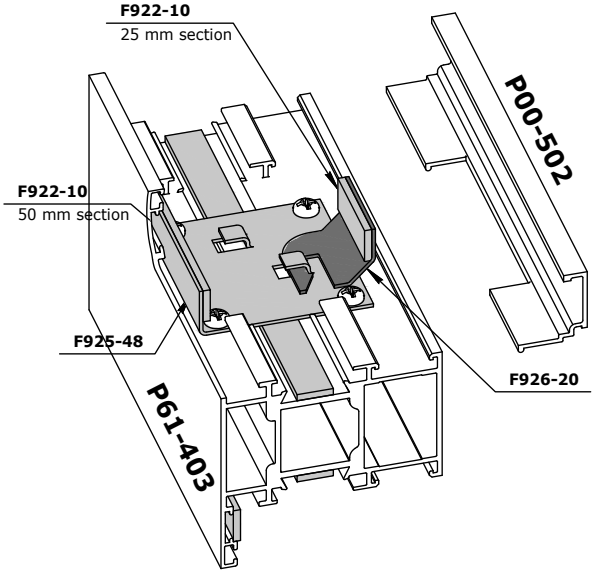

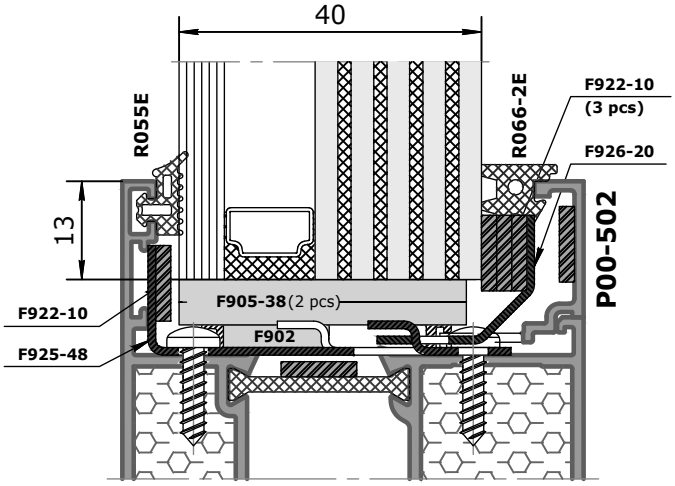

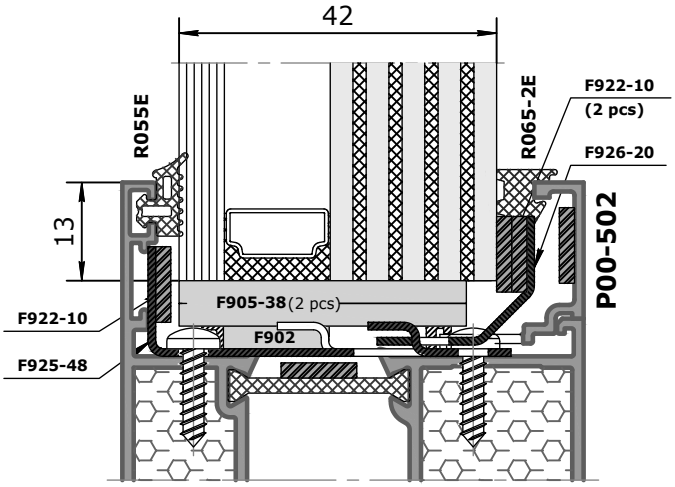

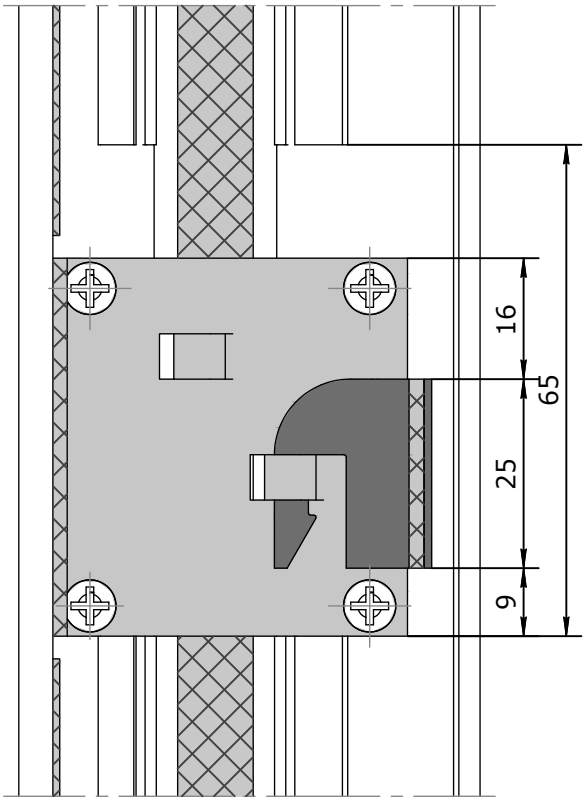

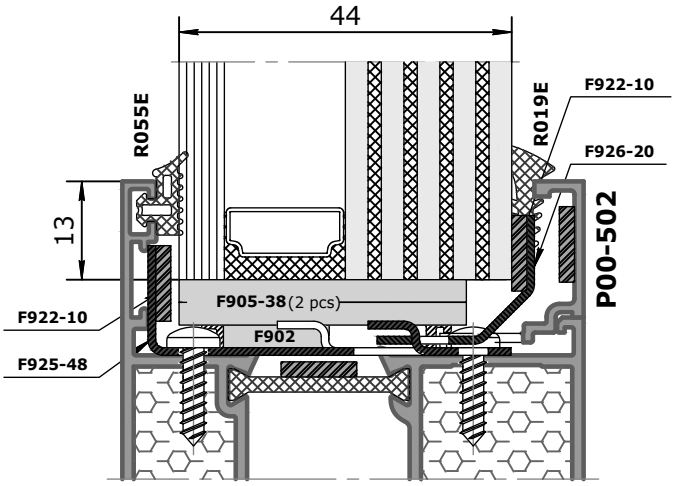

All stainless steel retainers shall be installed using the stainless self-tapping screws **S002**

Range of fire-resistant laminated glasses

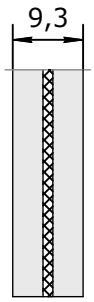

EIW15

Pyrobel 8 laminated glass 4-gel-4

9.3 mm thick (+/–1 mm)
weight 20 kg/m²

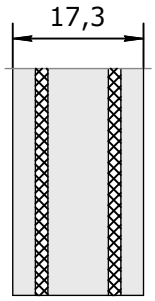

EIW30

Pyrobel 16 laminated glass 3-gel-8-gel-3

17.3 mm thick (+/–1.2 mm)
weight 40 kg/m²

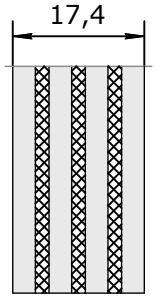

EIW45

Pyrobel 17 laminated glass 3-gel-3-gel-3-gel-3

17.4 mm thick (+/–2 mm)
weight 40 kg/m²

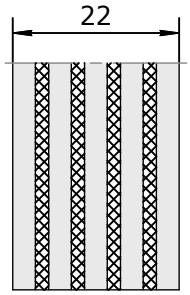

EIW60

Pyrobel 21 laminated glass 3-gel-3-gel-3-gel-3-gel-3

22 mm thick (+/–2 mm)
weight 47 kg/m²

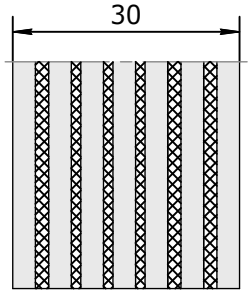

EIW90

Pyrobel 30 laminated glass 3-gel-3-gel-3-gel-3-gel-3-gel-3-gel-3

30 mm thick (+/–2 mm)
weight 69 kg/m²

Diagram for attaching the frame structures in the opening

A — distance between the fasteners;

— fasteners* (dowel*);

— support (bearing) pads NG (glass magnesium board).

* — Depends on the specifics of the facility. The length of the concrete dowel (screw) depends on the mounting joint.

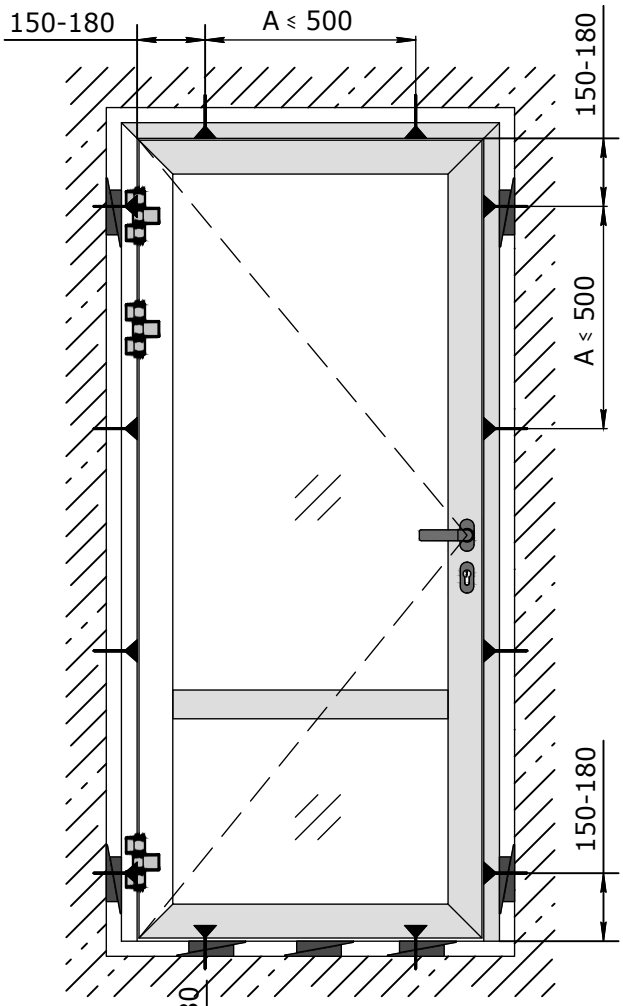

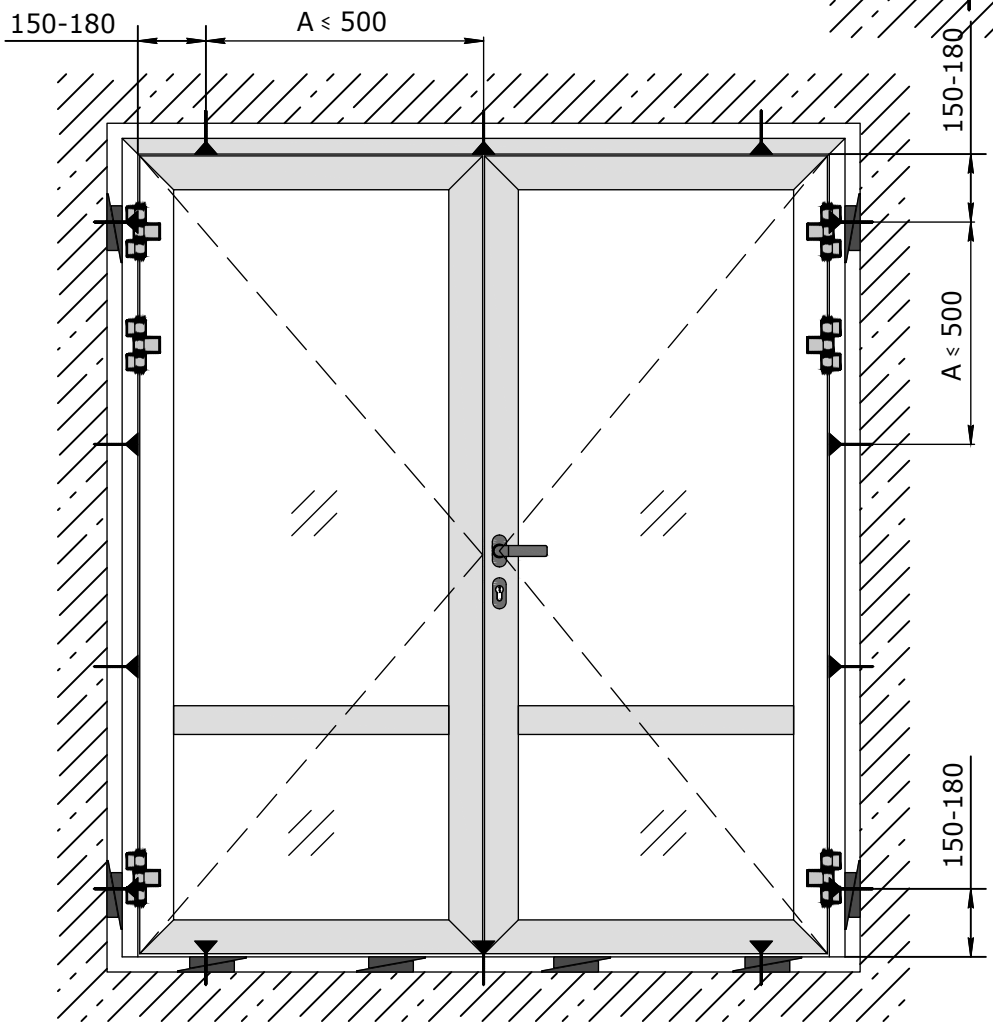

Fastening through the frame

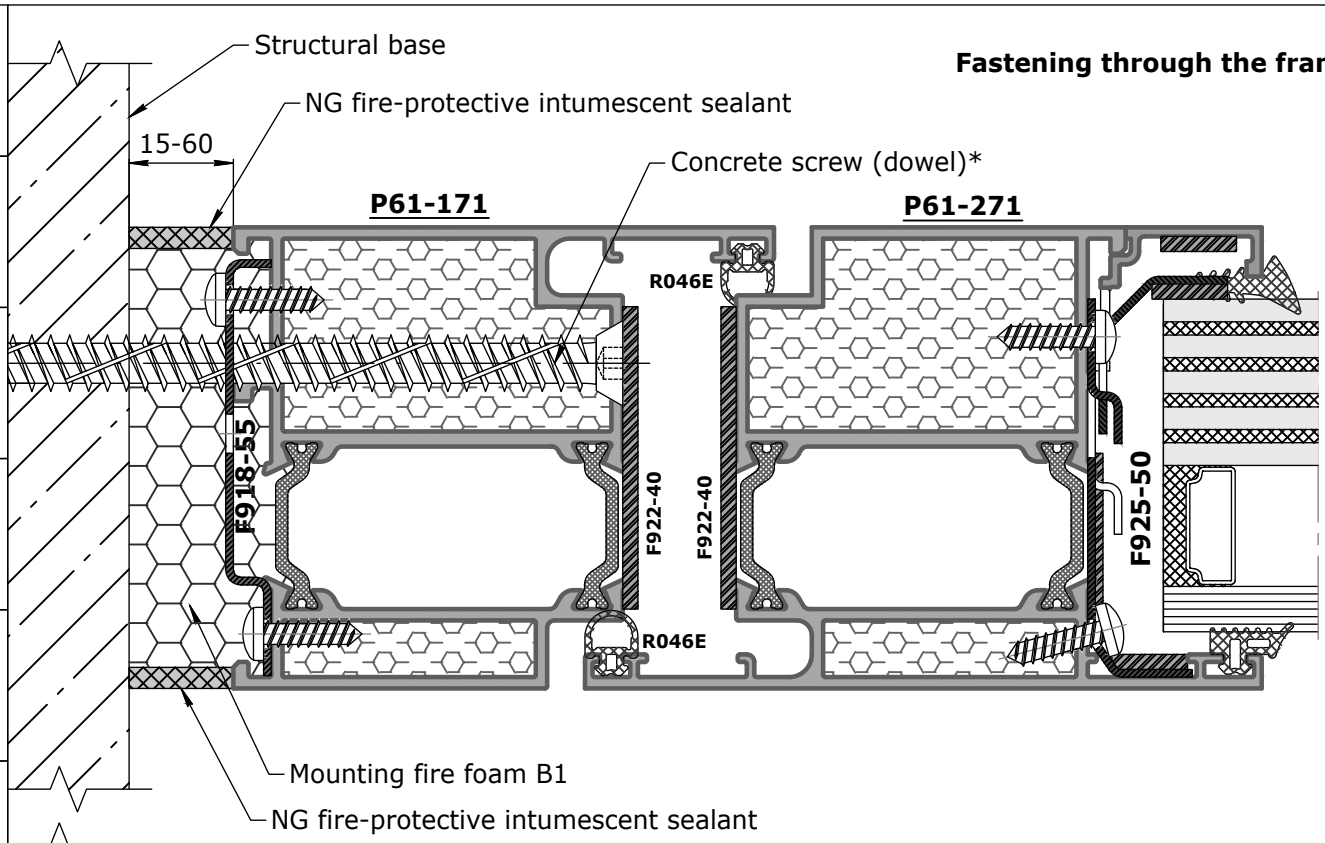

Fastening to mounting plate

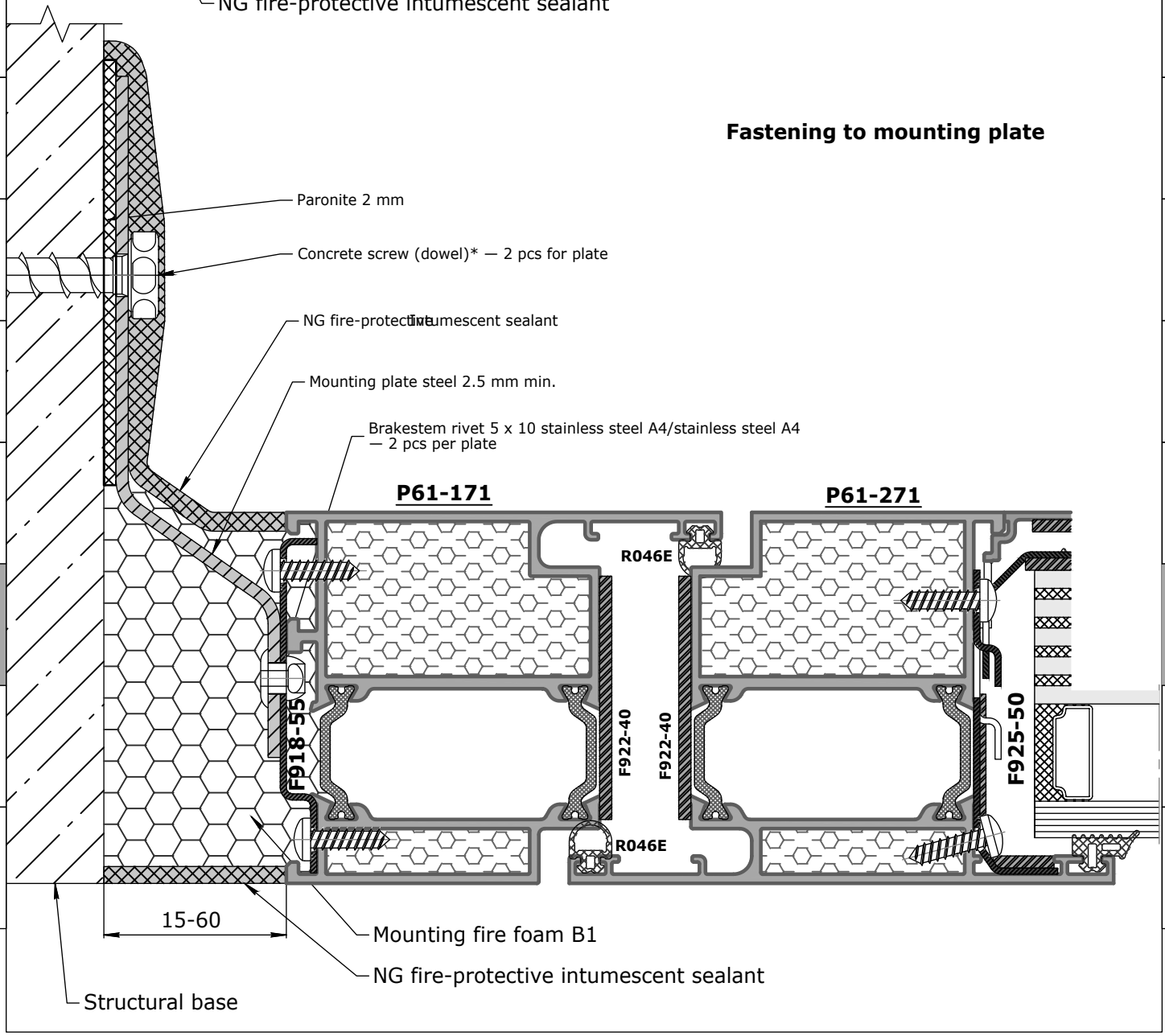

contents
profiles
delivery set
profiles (1:1)
sections
glazing tables
sub-assemblies tables
fitting arrangements
additional solutions
sub-assemblies
fire-resistant structures
connections
equipment and tools

Diagram for attaching the frame structures into the opening

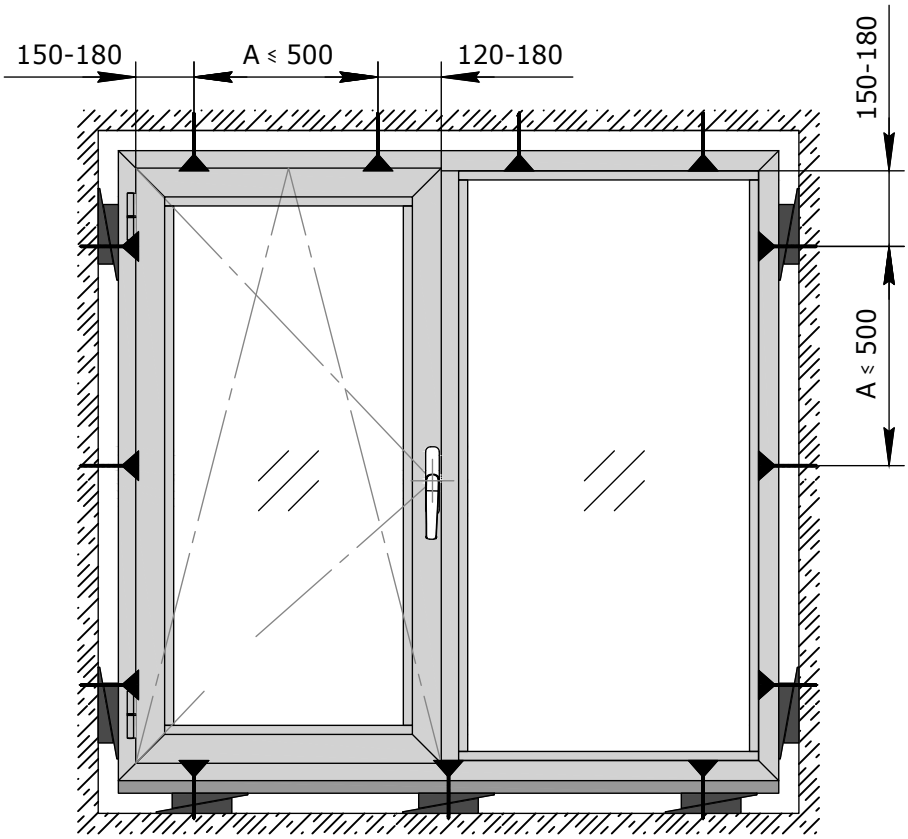

a) Window unit with vertical impost

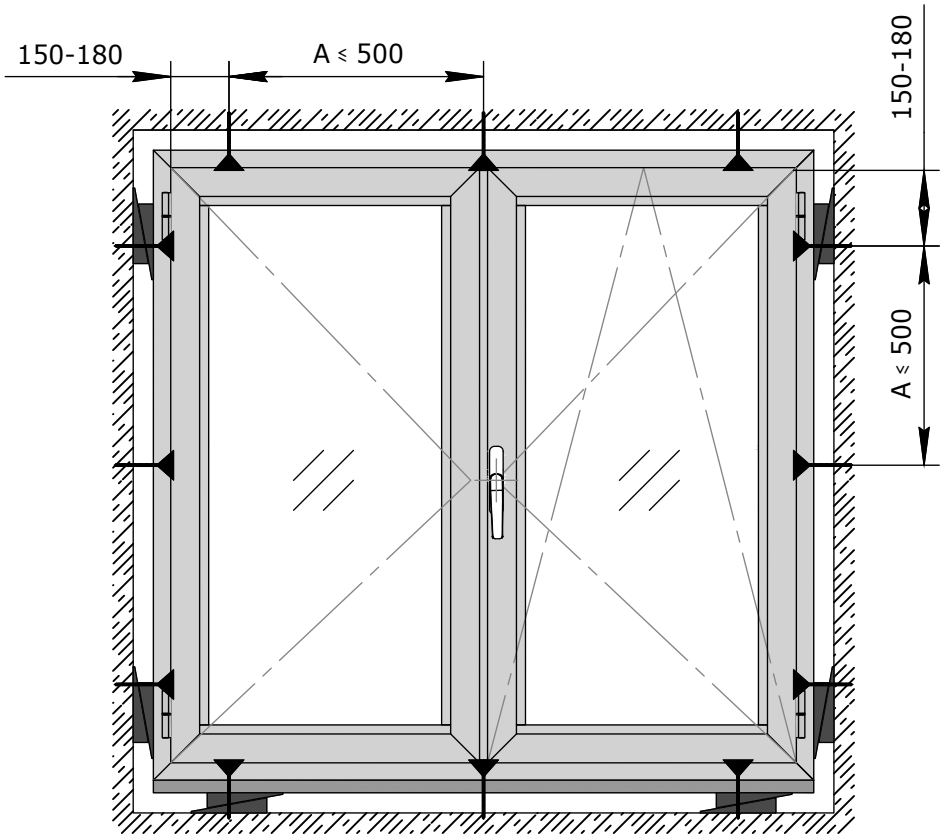

b) Window unit with an impost-free (forend) rabbet ledge

A — distance between the fasteners;

— fasteners (of system);

— support (bearing) pads.

contents
profiles
delivery set
profiles (1:1)
sections
glazing tables
sub-assemblies tables
fitting arrangements
additional solutions
sub-assemblies
fire-resistant structures
connections
equipment and tools

Mounting clearances

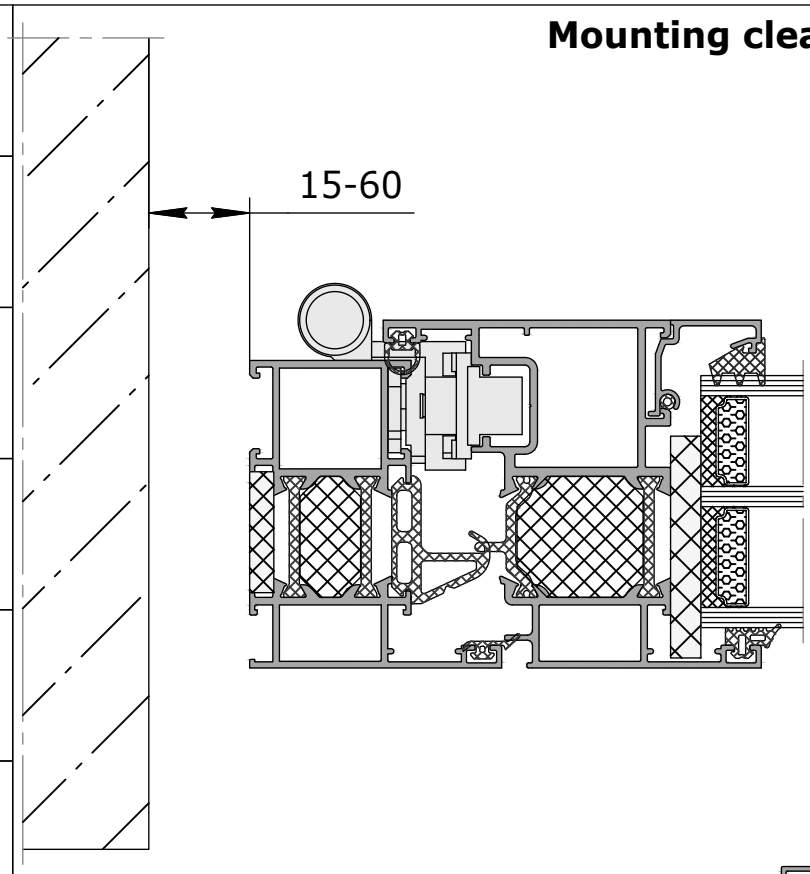

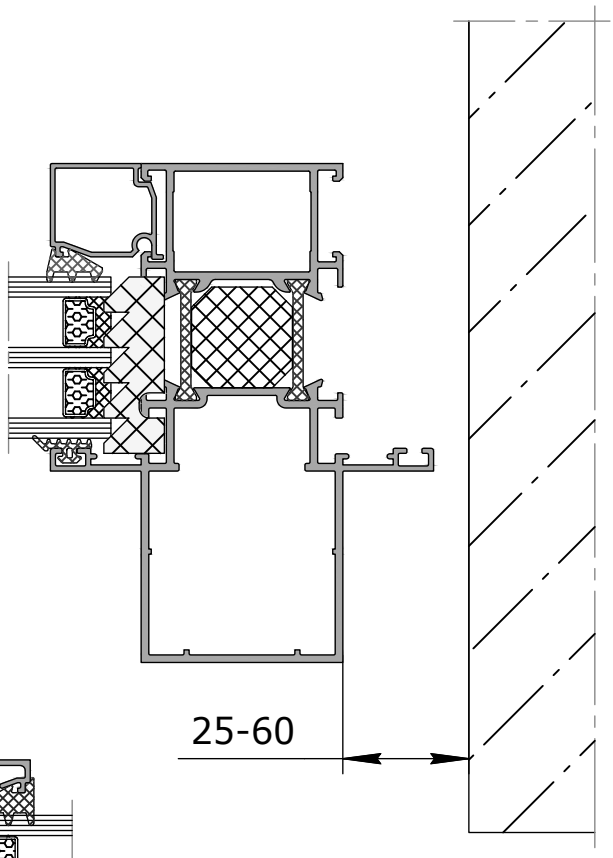

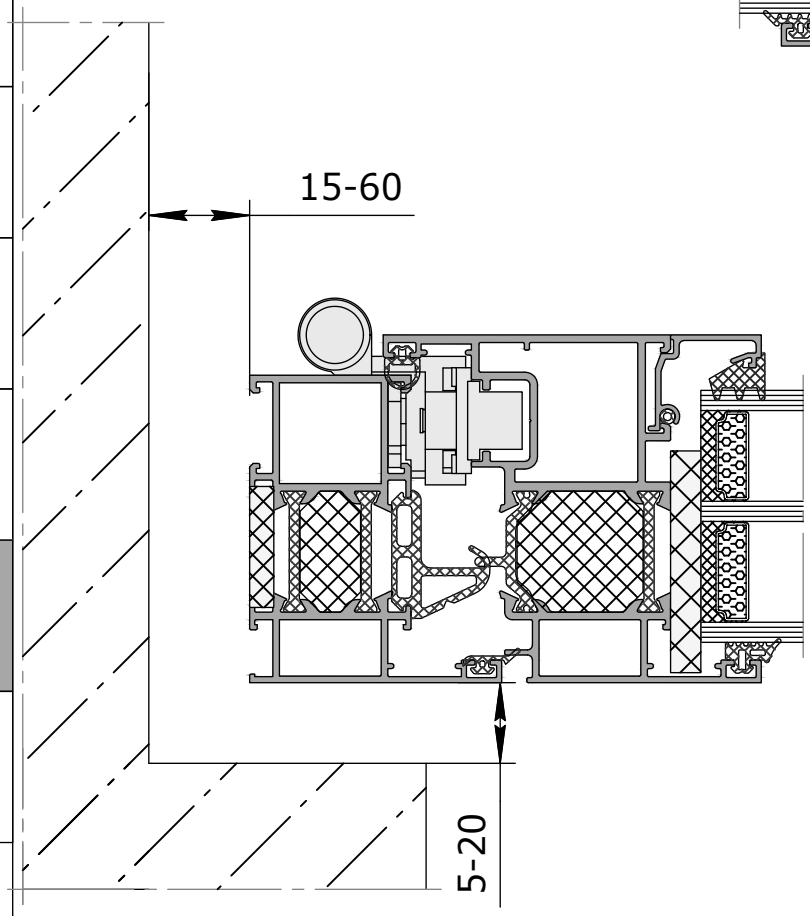

contents
profiles
delivery set
profiles (1:1)
sections
glazing tables
sub-assemblies tables
fitting arrangements
additional solutions
sub-assemblies
fire-resistant structures
connections
equipment and tools

contents
profiles
delivery set
profiles (1:1)
sections
glazing tables
sub-assemblies tables
fitting arrangements
additional solutions
sub-assemblies
fire-resistant structures
connections
equipment and tools

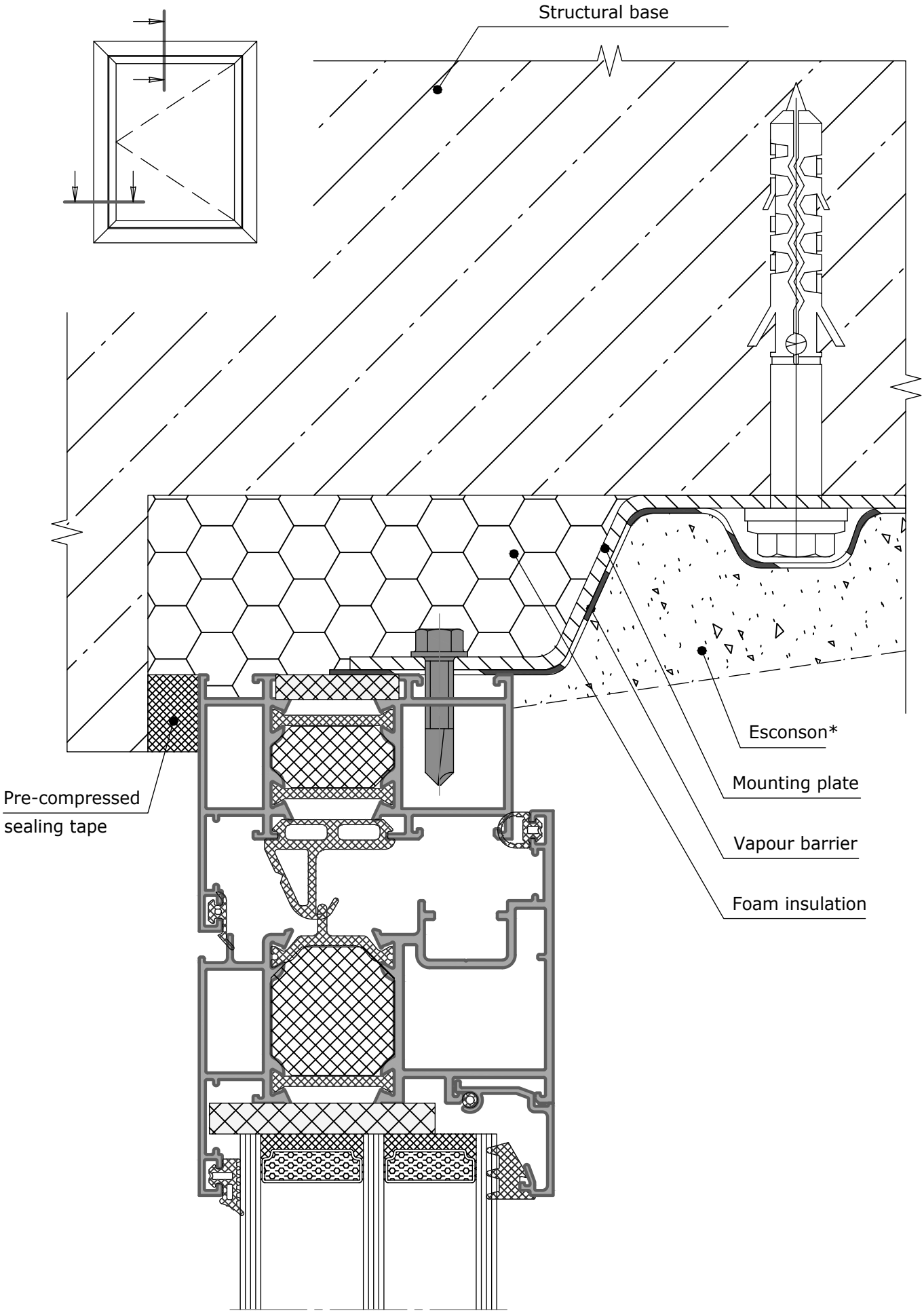

* depends on the specifics of the facility

contents
profiles
delivery set
profiles (1:1)
sections
glazing tables
sub-assemblies tables
fitting arrangements
additional solutions
sub-assemblies
fire-resistant structures
connections
equipment and tools

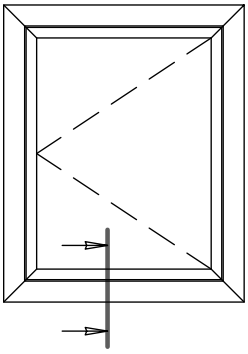

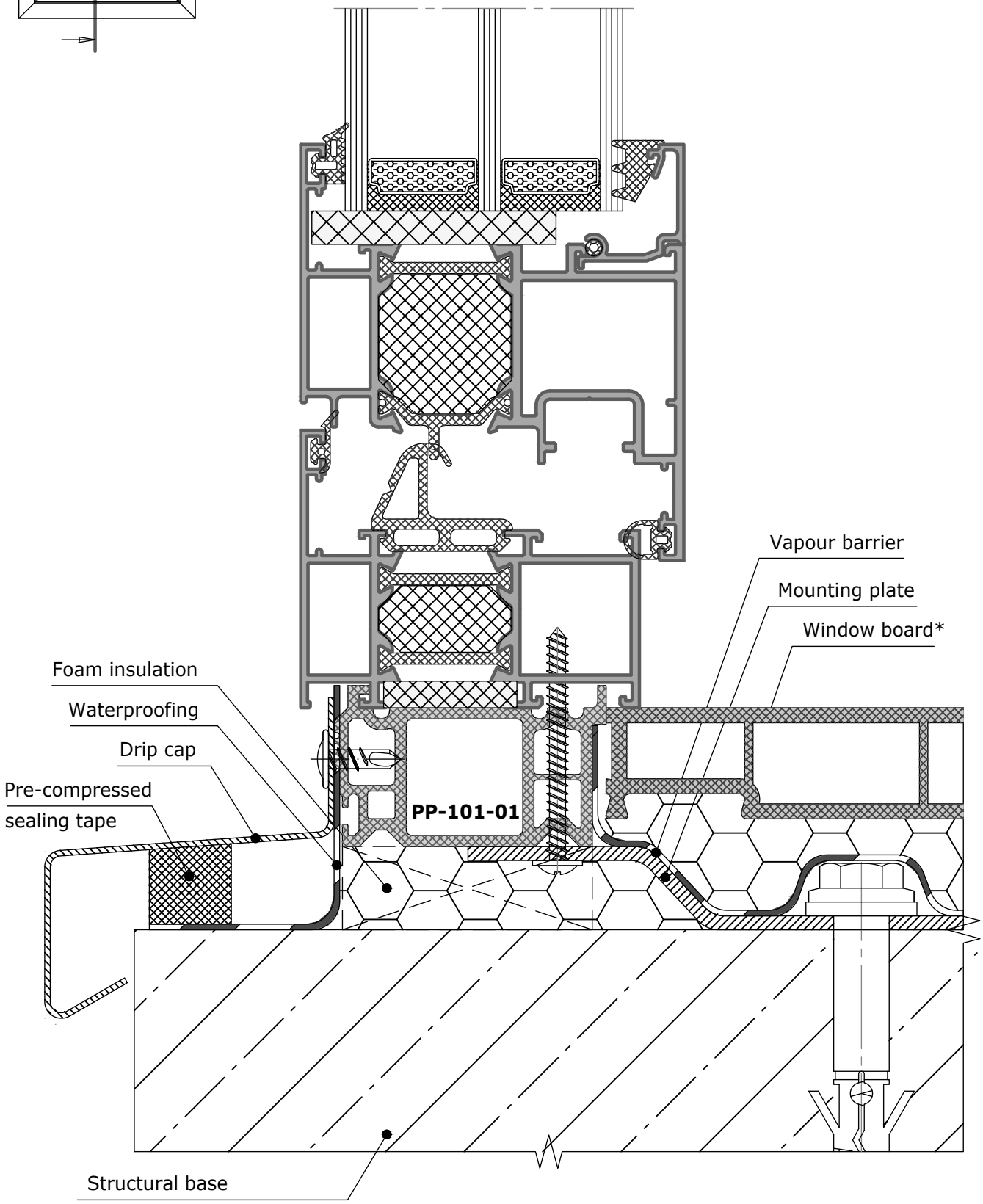

* depends on the specifics of the facility

contents
profiles
delivery set
profiles (1:1)
sections
glazing tables
sub-assemblies tables
fitting arrangements
additional solutions
sub-assemblies
fire-resistant structures
connections
equipment and tools

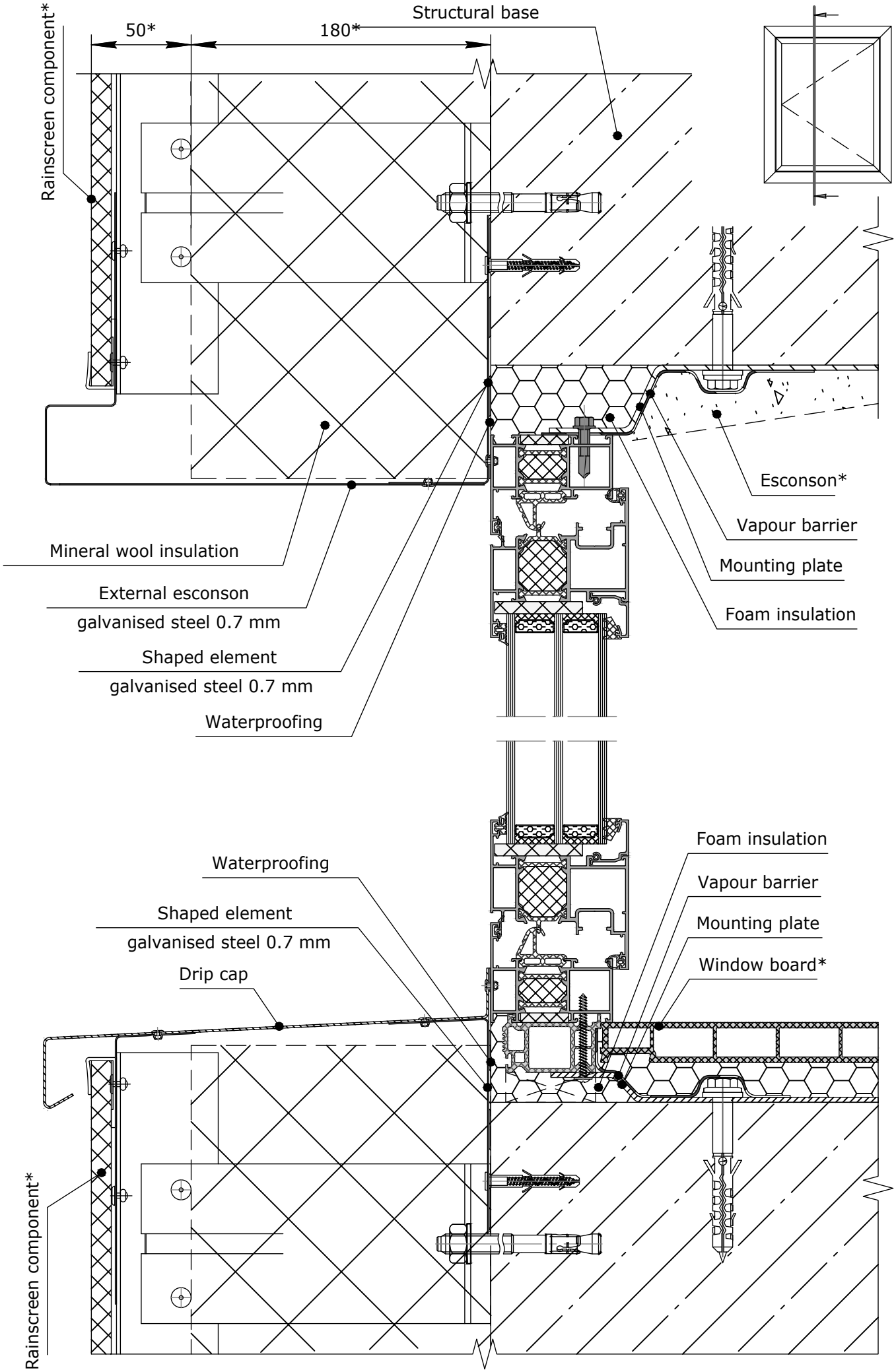

contents
profiles
delivery set
profiles (1:1)
sections
glazing tables
sub-assemblies tables
fitting arrangements
additional solutions
sub-assemblies
fire-resistant structures
connections
equipment and tools

contents
profiles
delivery set
profiles (1:1)
sections
glazing tables
sub-assemblies tables
fitting arrangements
additional solutions
sub-assemblies
fire-resistant structures
connections
equipment and tools

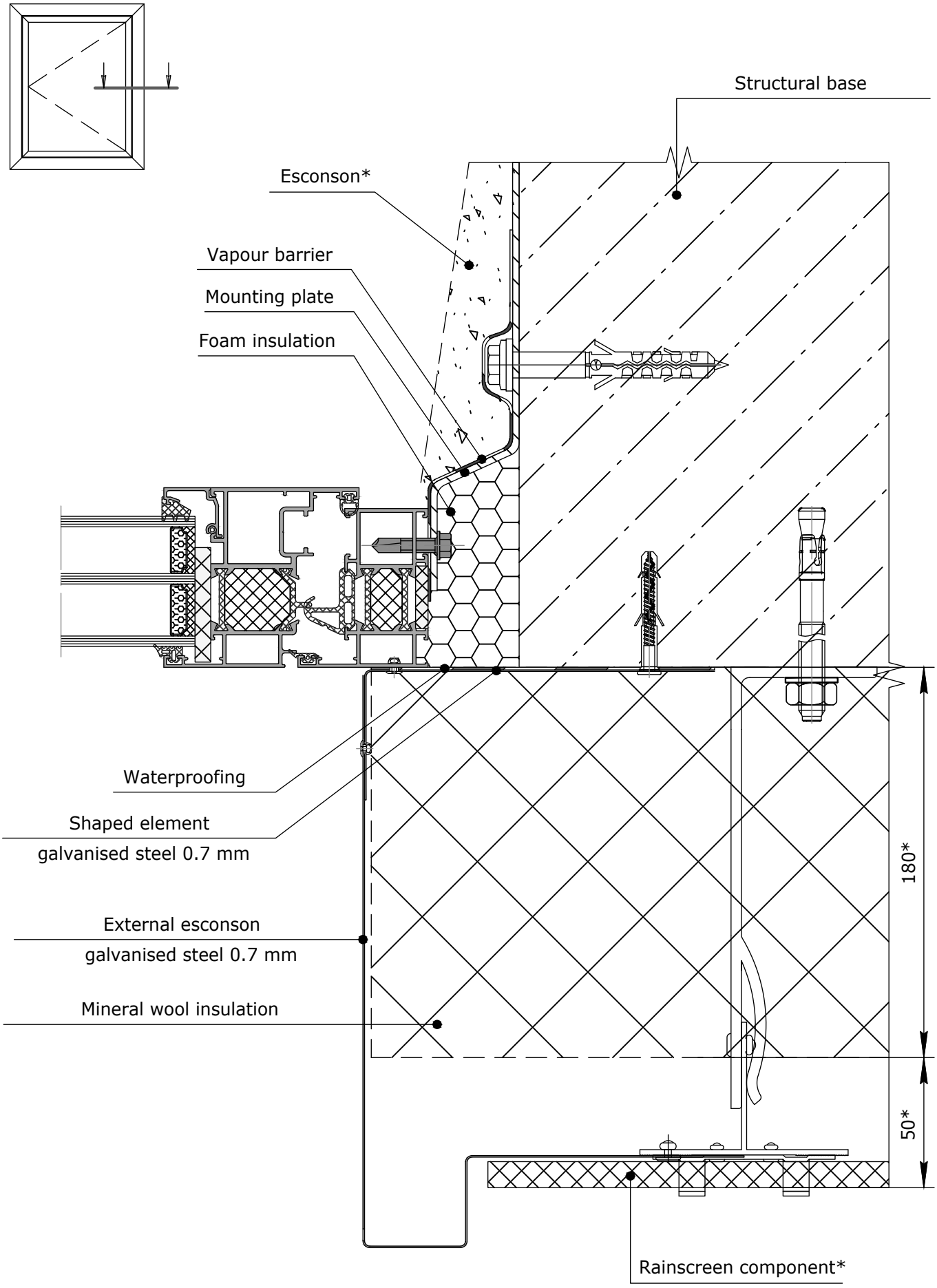

* depends on the specifics of the facility

contents
profiles
delivery set
profiles (1:1)
sections
glazing tables
sub-assemblies tables
fitting arrangements
additional solutions
sub-assemblies
fire-resistant structures
connections
equipment and tools

contents
profiles
delivery set
profiles (1:1)
sections
glazing tables
sub-assemblies tables
fitting arrangements
additional solutions
sub-assemblies
fire-resistant structures
connections
equipment and tools

E001
Gasket packing roller

E005
Cyanoacrylate adhesive for gaskets

CA-cyanoacrylate adhesive.
Adhesive viscosity 20 mPa·s.
One-component instant adhesive for sealing profiles made of APTK/EPDM (rubber elastomers) for fast and secure bonding of joints and corner bevels of rubber gaskets.

E006
Single-component adhesive for profiles

One-component, moisture-curing, solvent-free, joint-filling polyurethane adhesive with fast reaction time and viscoelastic adhesive joint.

E007
Painted and anodised profile cleaner

Fast-drying cleaning agent. Suitable for cleaning anodised and painted aluminium and polyurethane profiles, for removing dust, adhesive residues from protective film, grease pencil and rubber marks, fresh polyurethane foam and sealant residues such as resin/bitumen.

E004
Hex wrench kit

Gang milling cutters for **MastTech-61** profiles
E410
E416
E431
E435
E436

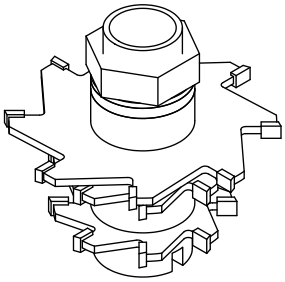

FR-230727
ROTO drilling jig for installing hinges on the frame

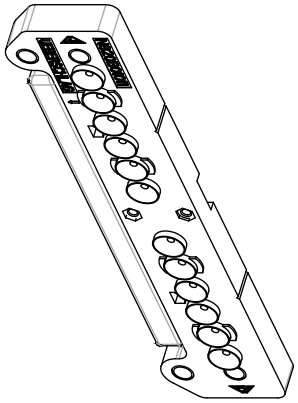

FR-391685
ROTO drilling jig for installing hinges on the sash

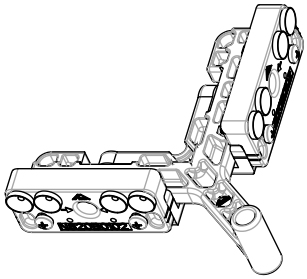

E315
Manual punch press for **MastTech-61** profiles (3 operations)

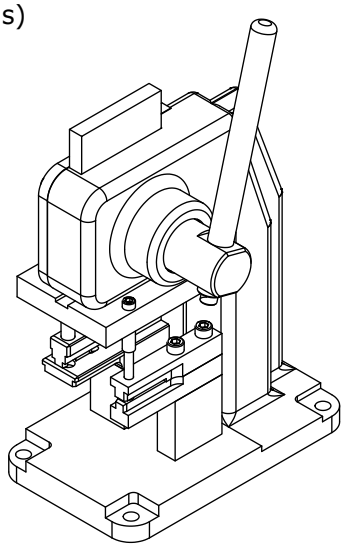

E509
Pneumatic punch press for **MastTech-61** profiles (3 operations)

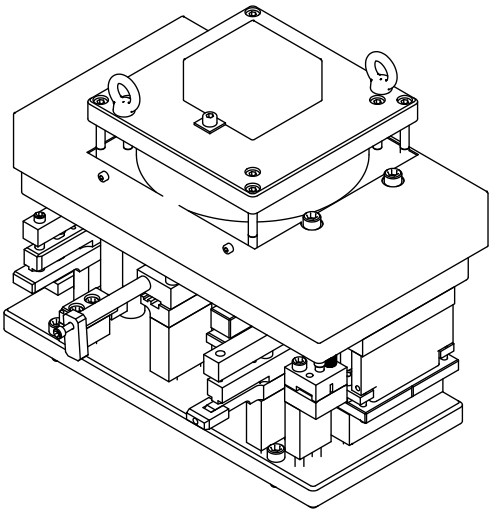

contents
profiles
delivery set
profiles (1:1)
sections
glazing tables
sub-assemblies tables
fitting arrangements
additional solutions
sub-assemblies
fire-resistant structures
connections
equipment and tools

E410
Gang milling cutter for **MastTech-61** profiles

Machined profiles

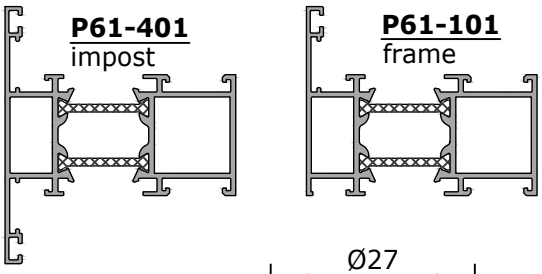

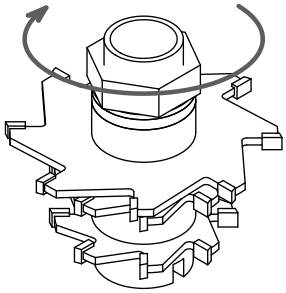

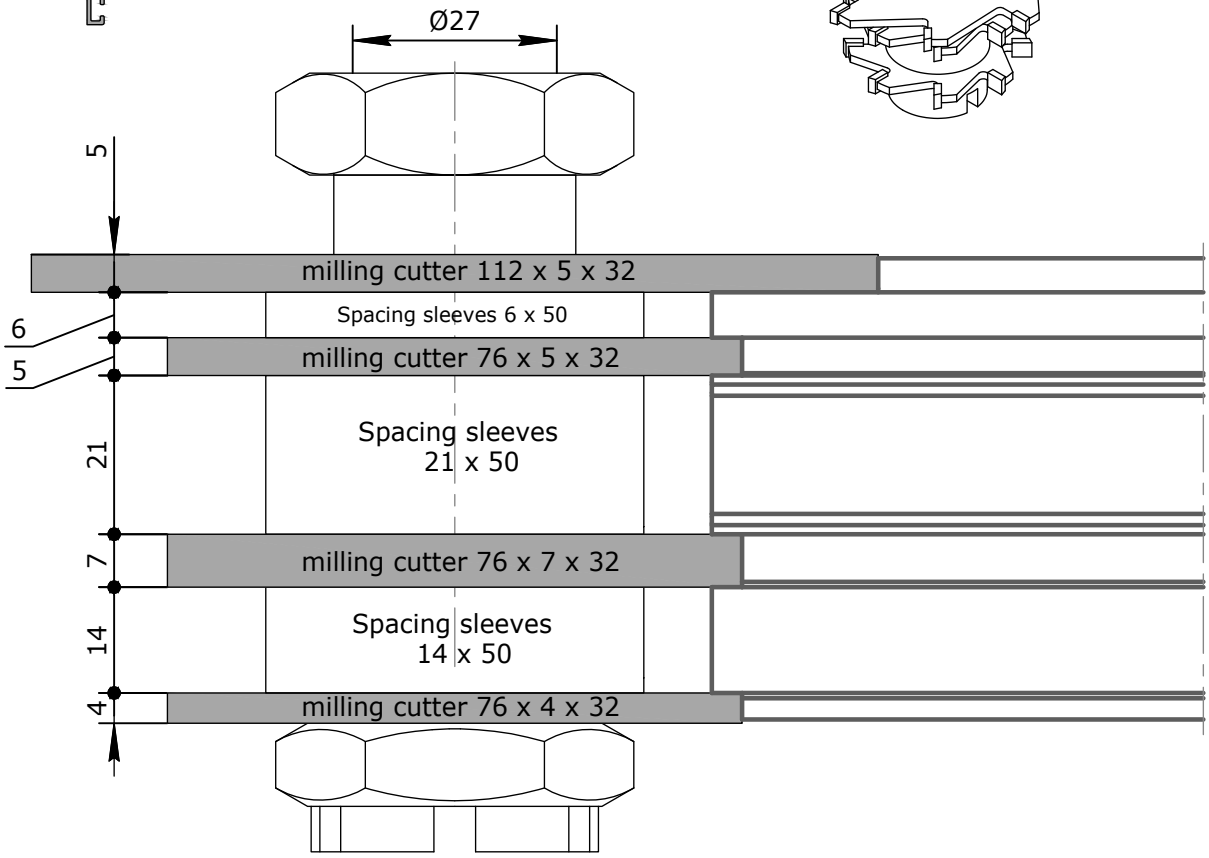

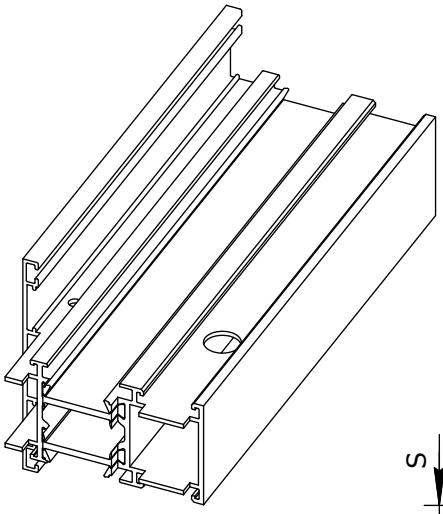

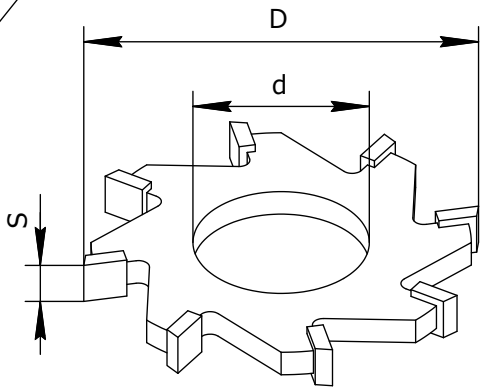

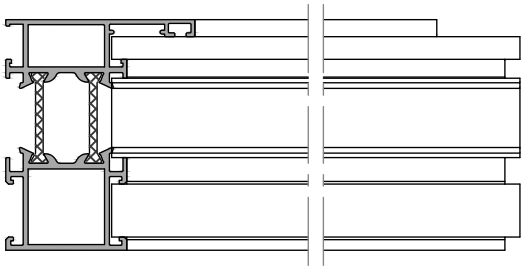

disk cutters used in the kit

	D	S	d	qty.
E400-112-5:	112	5	32	1
E400-76-4:	76	4	32	1
E400-76-5:	76	5	32	1
E400-76-7:	76	7	32	1

contents
profiles
delivery set
profiles (1:1)
sections
glazing tables
sub-assemblies tables
fitting arrangements
additional solutions
sub-assemblies
fire-resistant structures
connections
equipment and tools

E431
Gang milling cutter for **MastTech** profiles

Machined profiles

P61-103 **P61-401** **P61-403** **P61-404** **P67-405**

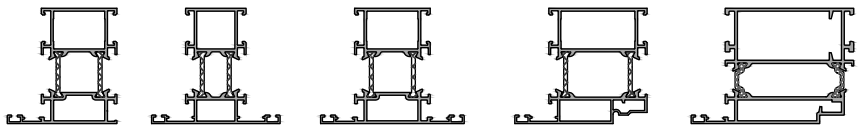

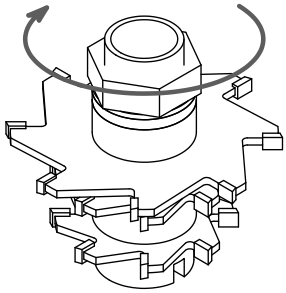

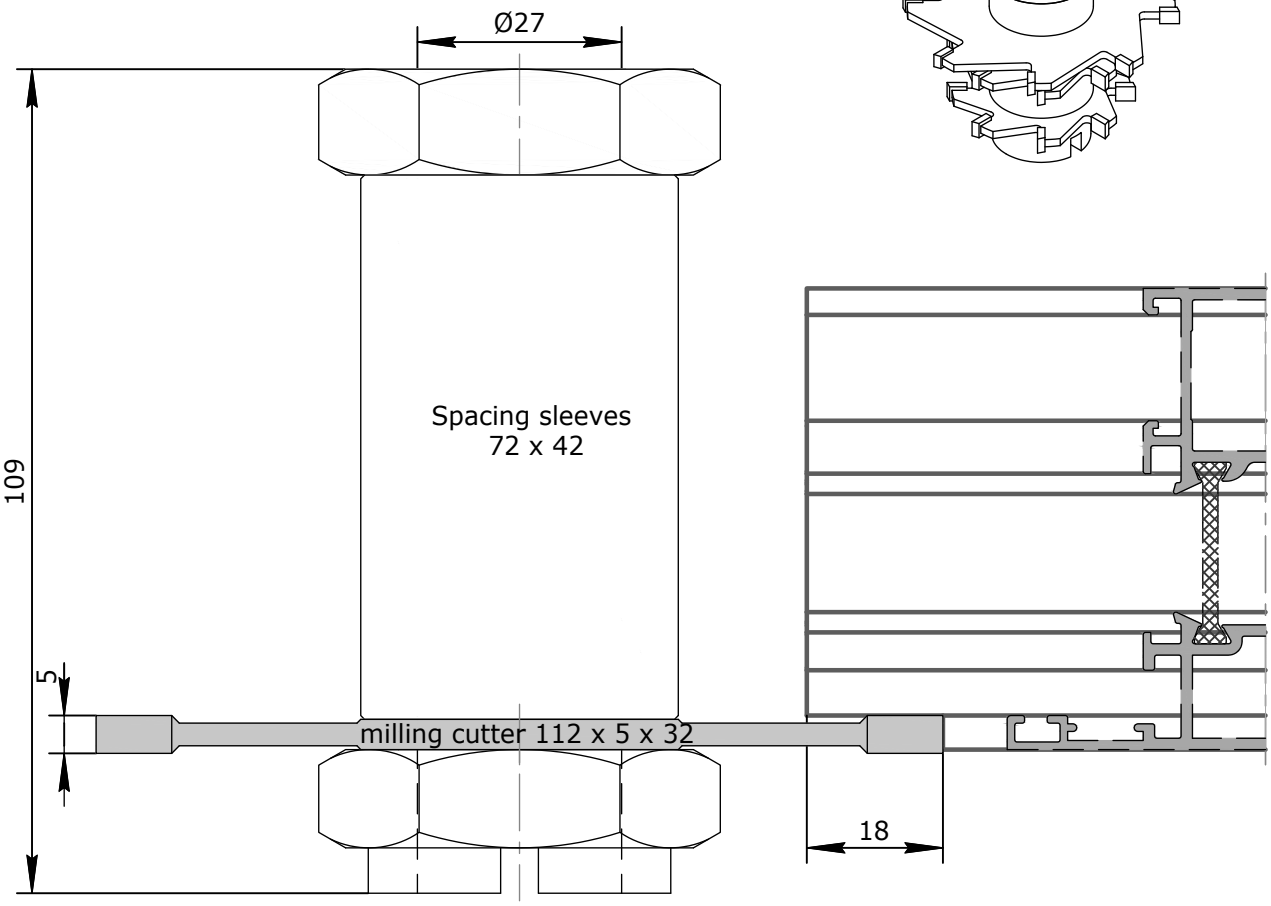

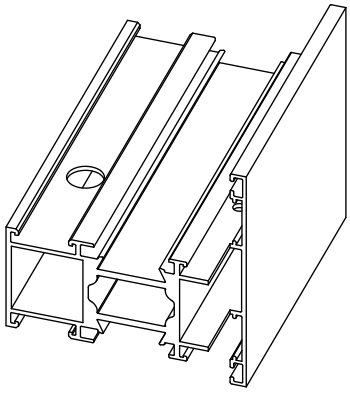

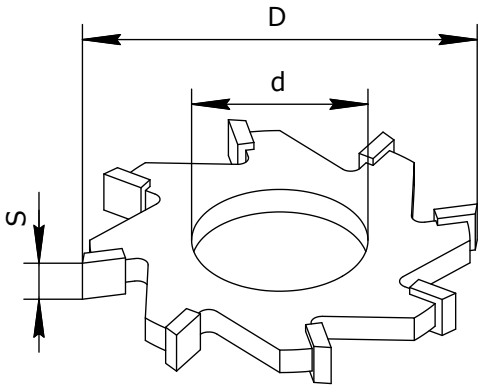

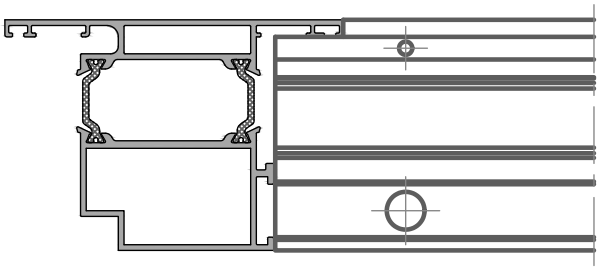

disk cutters used in the kit

	D	S	d	qty.
E400-112-5:	112	5	32	1

contents
profiles
delivery set
profiles (1:1)
sections
glazing tables
sub-assemblies tables
fitting arrangements
additional solutions
sub-assemblies
fire-resistant structures
connections
equipment and tools

E435
Gang milling cutter for **MastTech** profiles

Machined profiles

P61-212-190

P67-405

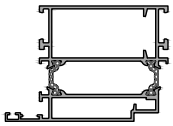

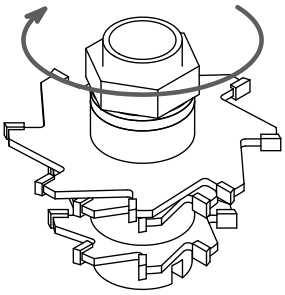

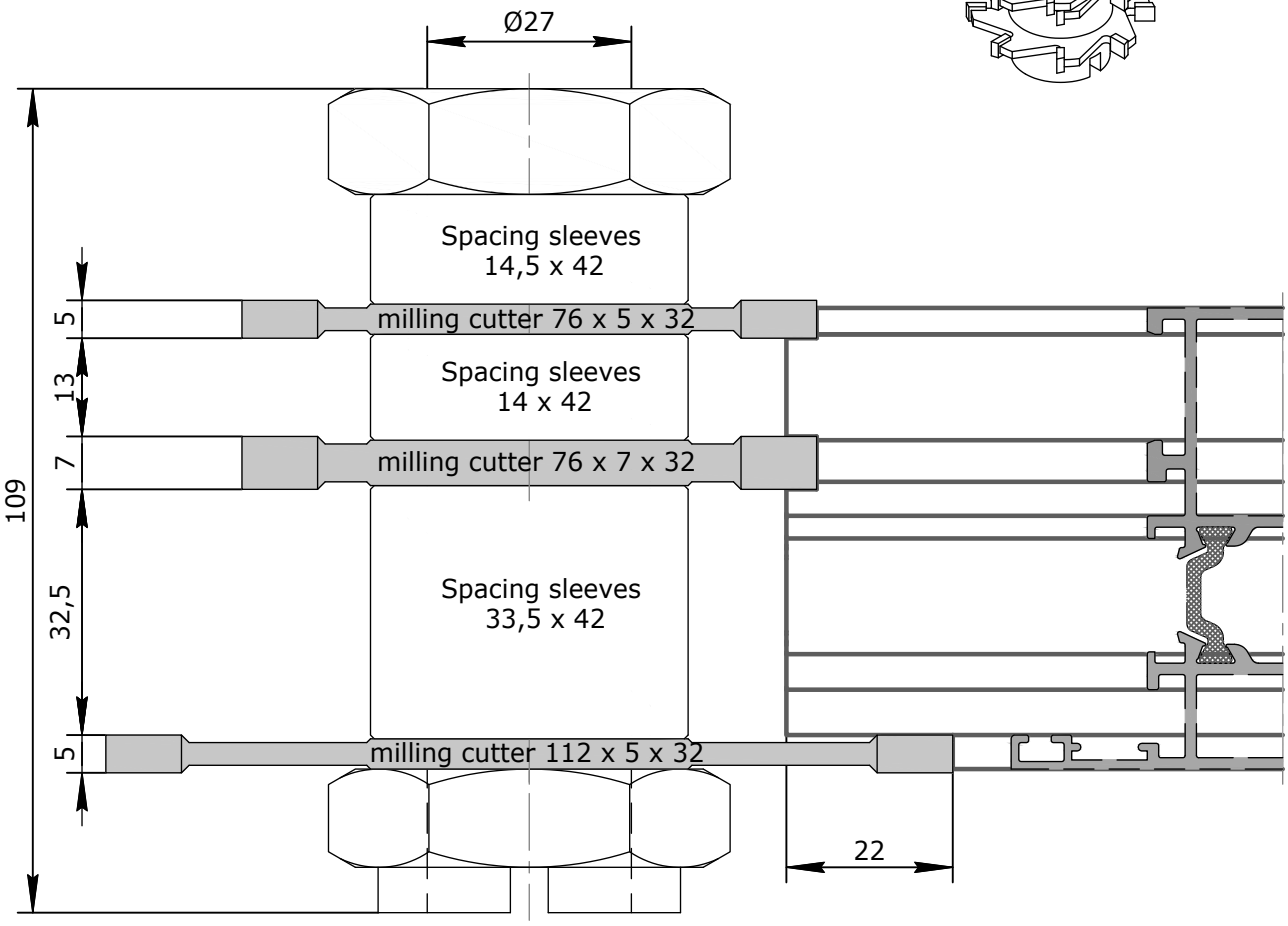

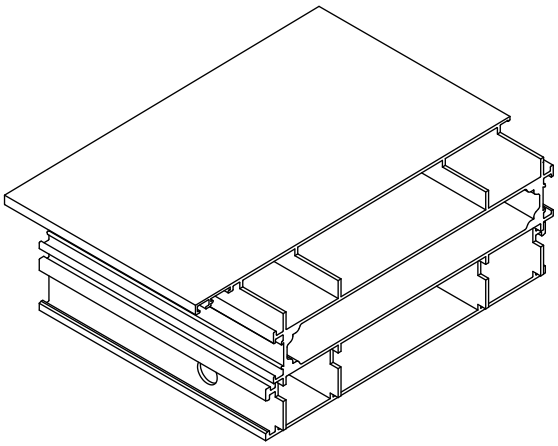

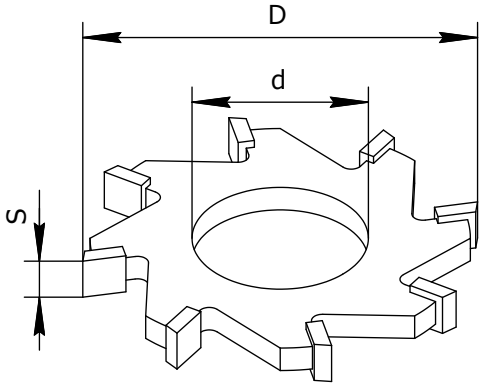

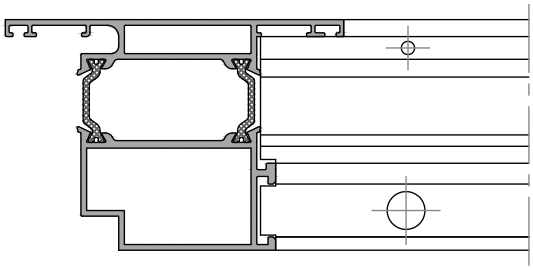

disk cutters used in the kit

	D	S	d	qty.
E400-112-5:	112	5	32	1
E400-76-5:	76	5	32	1
E400-76-7:	76	7	32	1

contents
profiles
delivery set
profiles (1:1)
sections
glazing tables
sub-assemblies tables
fitting arrangements
additional solutions
sub-assemblies
fire-resistant structures
connections
equipment and tools

E436
Gang milling cutter for **MastTech** profiles

Machined profiles

P61-025
Base rabbet ledge

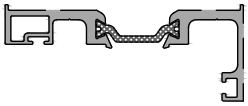

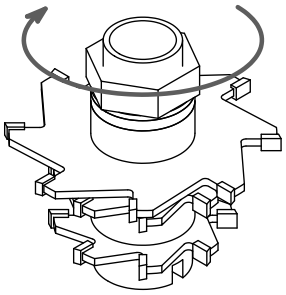

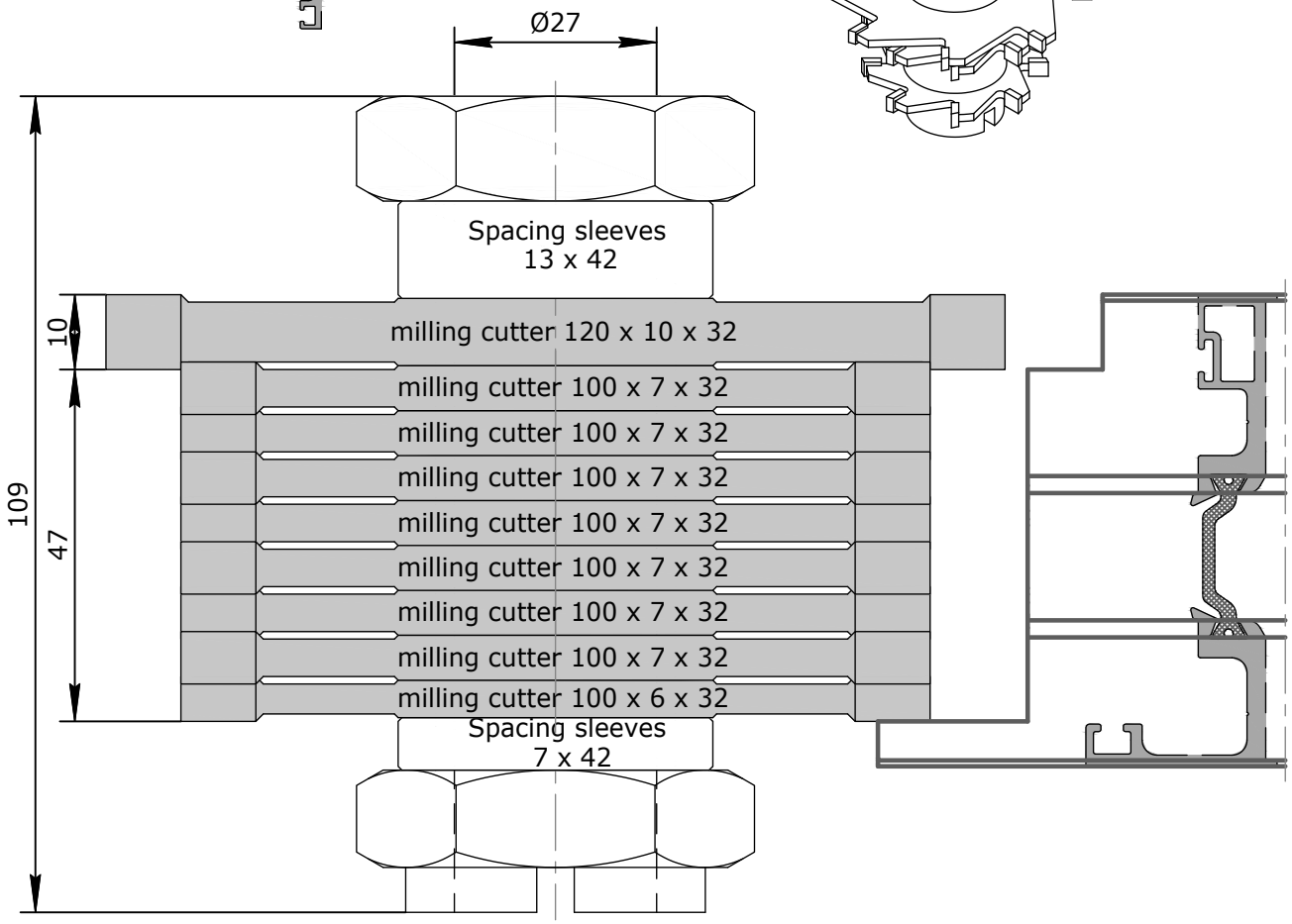

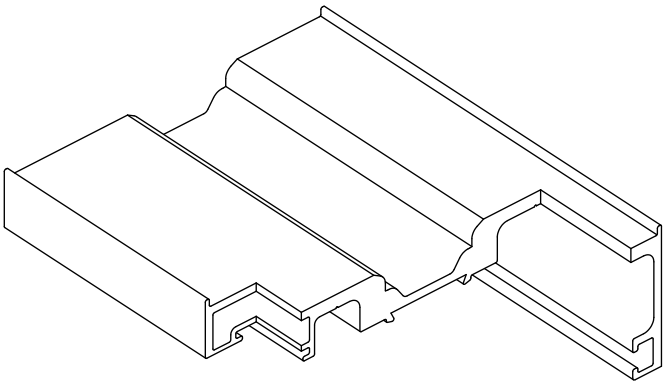

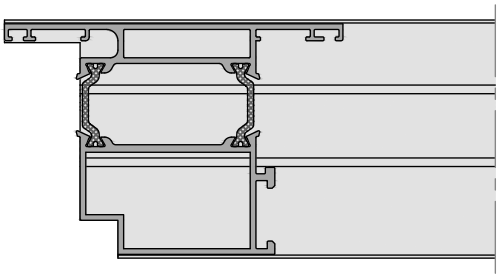

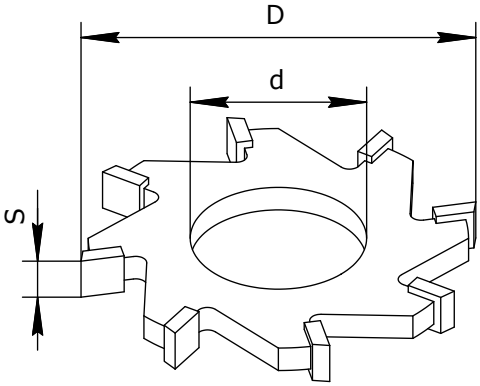

disk cutters used in the kit

	D	S	d	qty.
E400-120-10:	120	10	32	1
E400-100-7:	100	7	32	7
E400-100-6:	100	6	32	1

contents
profiles
delivery set
profiles (1:1)
sections
glazing tables
sub-assemblies tables
fitting arrangements
additional solutions
sub-assemblies
fire-resistant structures
connections
equipment and tools

E416
Gang milling cutter for ventilation sash

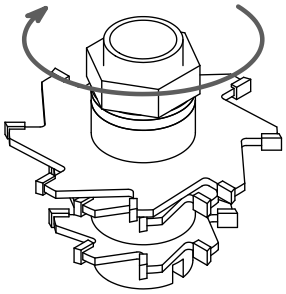

Machined profiles

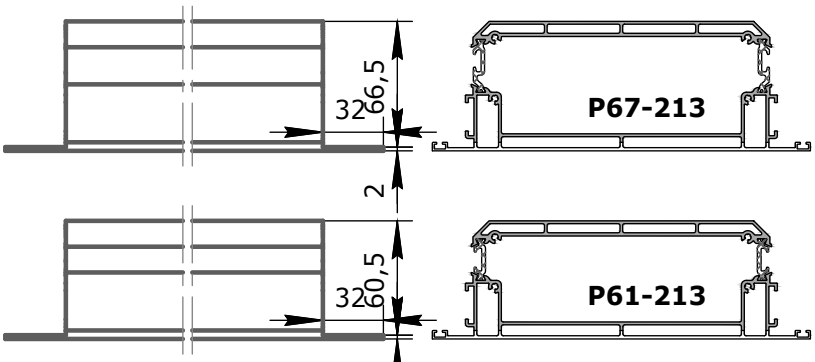

Due to the large mass and large diameter of the gang milling cutter, it is not guaranteed to work consistently on any face-milling machine.

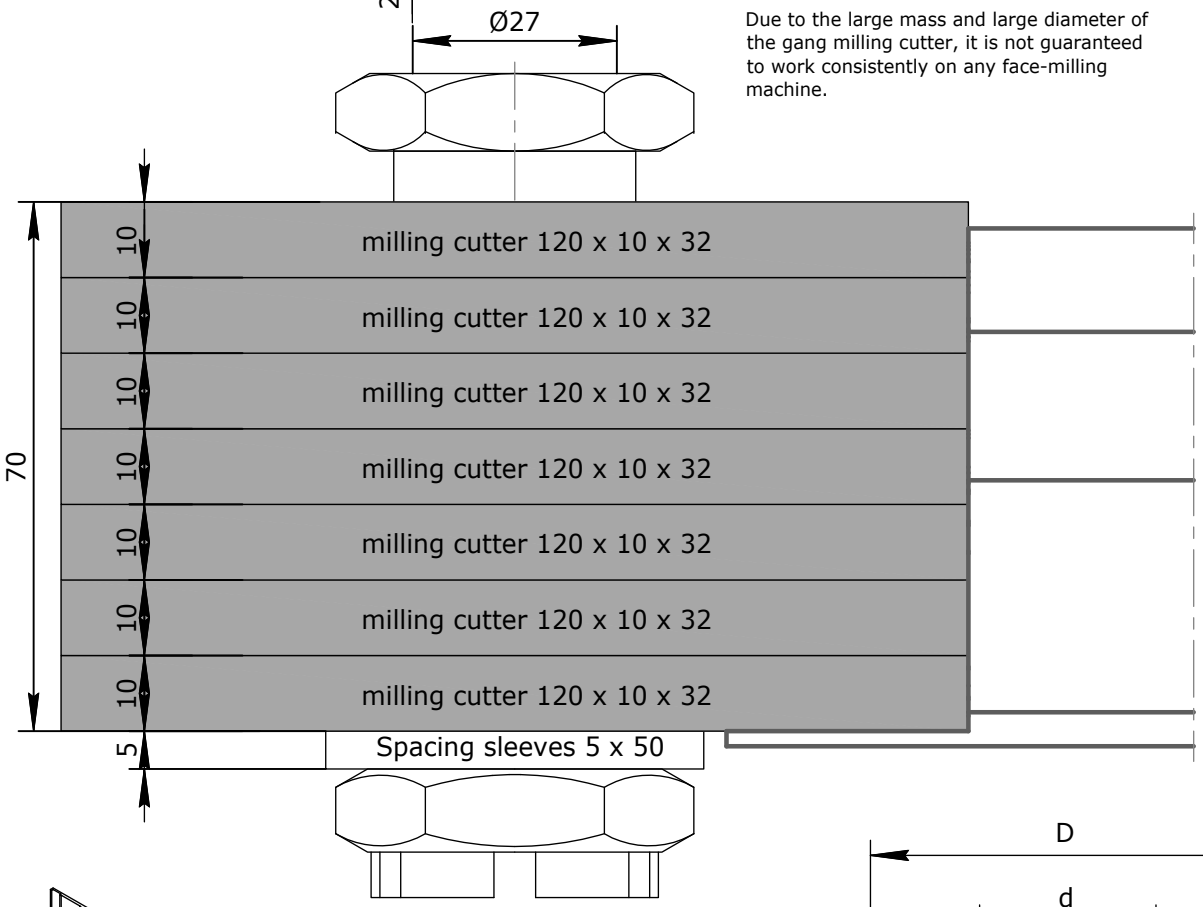

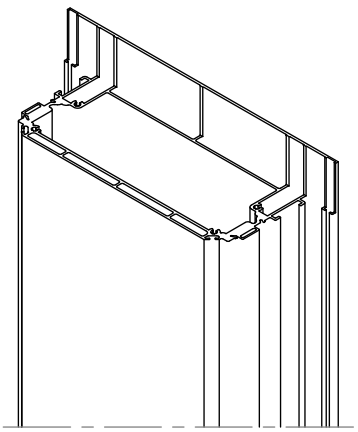

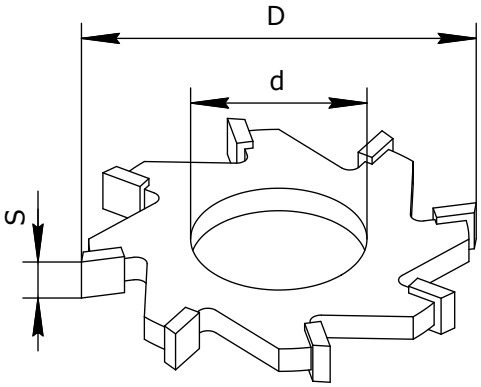

disk cutters used in the kit

	D	S	d	qty.
E400-120-10:	120	10	32	7

Head office

2 Odesskaya str., Moscow, Russia
+7 (499) 558-18-67
www.masttech.ru
info@masttech.ru